# FR-A800

## Inverter

## Instruction Manual

**FR-A820-00046(0.4K) to 04750(90K)**
**FR-A840-00023(0.4K) to 06830(280K)**
**FR-A842-07700(315K) to 12120(500K)**
**FR-A846-00023(0.4K) to 03610(132K)**

Art. no.: 274661
16 10 2014
Version D



Version check

**Instruction Manual**
**Inverter FR-A800**
**Art. no.: 274661**

| Version | | | Changes / Additions / Corrections | |
|---|---|---|---|---|
| A | 04/2014 | pdp | First edition | |
| B | 05/2014 | akl | Additions: | • FR-A840-03250(110K) to FR-A840-06830(280K)<br>• IP55 compatible model<br>• Compatibility with FR-A8NP<br>• SF-PR included (setting values "70, 73, 74" of Pr. 71 (Pr. 450) )<br>• Swinging suppression (Pr. 1072 to Pr. 1079)<br>• Position control functions (Pr. 1289, Pr. 1290, Pr. 1292 to Pr. 1297)<br>• Heatsink protrusion attachment<br>• Appendix: HMS network options |
| C | 07/2014 | akl/ pdp-gb | Additions: | • Separated converter type |
| D | 10/2014 | akl | Additions: | • Motor permissible load level (Pr. 607, Pr. 608)<br>• FR-A846-00023(0.4K) to 00170(5.5K), FR-A846-00620(22K) to 03610(132K) |

Thank you for choosing this Mitsubishi inverter.

This Instruction Manual provides instructions for advanced use of the FR-A800 series inverters. Incorrect handling might cause an unexpected fault. Before using the inverter, always read this Instruction Manual to use the equipment to its optimum.

# Safety instructions

Do not attempt to install, operate, maintain or inspect the inverter until you have read through this Instruction Manual and appended documents carefully and can use the equipment correctly. Do not use the inverter until you have a full knowledge of the equipment, safety information and instructions.
Installation, operation, maintenance and inspection must be performed by qualified personnel. Here, qualified personnel means personnel who meets all the conditions below.

- A person who took a proper engineering training. Such training may be available at your local Mitsubishi Electric office. Contact your local sales office for schedules and locations.
- A person who can access operating manuals for the protective devices (e.g. light curtain) connected to the safety control system. A person who has read and familiarized himself/herself with the manuals.

In this Instruction Manual, the safety instruction levels are classified into “WARNING” and “CAUTION”.

**WARNING:**

***Assumes that incorrect handling may cause hazardous conditions, resulting in death or severe injury.***

**CAUTION:**

***Assumes that incorrect handling may cause hazardous conditions, resulting in medium or slight injury, or may cause physical damage only.***

Note that even the CAUTION level may lead to a serious consequence according to conditions. Please follow strictly the instructions of both levels because they are important to personnel safety.

## Electric Shock Prevention

**WARNING:**

- ***While power is on or when the inverter is running, do not open the front cover. Otherwise you may get an electric shock.***
- ***Do not run the inverter with the front cover removed. Otherwise, you may access the exposed high-voltage terminals or the charging part of the circuitry and get an electric shock.***
- ***Even if power is off, do not remove the front cover except for wiring or periodic inspection.You may access the charged inverter circuits and get an electric shock.***
- ***Before starting wiring or inspection, check to make sure that the operation panel indicator is off, wait for at least 10 minutes after the power supply has been switched off, and check that there are no residual voltage using a tester or the like. The capacitor is charged with high voltage for some time after power off and it is dangerous.***
- ***This inverter must be earthed. Earthing must conform to the requirements of national and local safety regulations and electrical codes (JIS, NEC section 250, IEC 536 class 1 and other applicable standards). A neutral-point earthed power supply for 400V class inverter in compliance with EN standard must be used.***
- ***Any person who is involved in the wiring or inspection of this equipment should be fully competent to do the work.***
- ***Always install the inverter before wiring. Otherwise, you may get an electric shock or be injured.***
- ***If your application requires by installation standards an RCD (residual current device) as up stream protection please select according to DIN VDE 0100-530 as following:***
  ***Single phase inverter type A or B***
  ***Three phase inverter only type B***
- ***Perform setting dial and key operations with dry hands to prevent an electric shock. Otherwise you may get an electric shock.***
- ***Do not subject the cables to scratches, excessive stress, heavy loads or pinching. Otherwise you may get an electric shock.***
- ***Do not replace the cooling fan while power is on. It is dangerous to replace the cooling fan while power is on.***
- ***Do not touch the printed circuit board or handle the cables with wet hands. You may get an electric shock.***
- ***When measuring the main circuit capacitor capacity, the DC voltage is applied to the motor for 1s at powering OFF. Never touch the motor terminal, etc. right after powering OFF to prevent an electric shock.***
- ***A PM motor is a synchronous motor with high-performance magnets embedded in the rotor. Motor terminals holds high-voltage while the motor is running even after the inverter power is turned OFF. Before wiring or inspection, the motor must be confirmed to be stopped. In an application, such as fan and blower, where the motor is driven by the load, a low-voltage manual motor starter must be connected at the inverter's output side, and wiring and inspection must be performed while the motor starter is open. Otherwise you may get an electric shock.***

## Fire Prevention

**CAUTION:**

- ***Mount the inverter to incombustible material. Install the inverter on a nonflammable wall without holes (so that nobody can touch the inverter heatsink on the rear side, etc.). Mounting it to or near combustible material can cause a fire.***
- ***If the inverter has become faulty, switch off the inverter power. A continuous flow of large current could cause a fire.***
- ***When using a brake resistor, a sequence that will turn OFF power when a fault signal is output must be configured. Otherwise the brake resistor may excessively overheat due to damage of the brake transistor and such, causing a fire.***
- ***Do not connect a resistor directly to the DC terminals P/+, N/–. This could cause a fire and destroy the inverter. The surface temperature of braking resistors can far exceed 100 °C for brief periods. Make sure that there is adequate protection against accidental contact and a safe distance is maintained to other units and system parts.***
- ***Be sure to perform daily and periodic inspections as specified in the Instruction Manual. If a product is used without any inspection, a burst, breakage, or a fire may occur.***

## Injury Prevention

**CAUTION:**

- ***Apply only the voltage specified in the instruction manual to each terminal. Otherwise, burst, damage, etc. may occur.***
- ***Ensure that the cables are connected to the correct terminals. Otherwise, burst, damage, etc. may occur.***
- ***Always make sure that polarity is correct to prevent damage, etc. Otherwise, burst, damage, etc. may occur.***
- ***While power is on or for some time after power-off, do not touch the inverter as it is hot and you may get burnt.***

## Additional Instructions

Also note the following points to prevent an accidental failure, injury, electric shock, etc.

### Transportation and installation

**CAUTION:**

- ***Any person who is opening a package using a sharp object, such as a knife and cutter, must wear gloves to prevent injuries caused by the edge of the sharp object.***
- ***When carrying products, use correct lifting gear to prevent injury.***
- ***Do not stand or rest heavy objects on the product.***
- ***Do not stack the inverter boxes higher than the number recommended.***
- ***When carrying the inverter, do not hold it by the front cover or setting dial; it may fall off or fail.***
- ***During installation, caution must be taken not to drop the inverter as doing so may cause injuries.***
- ***Ensure that installation position and material can withstand the weight of the inverter. Install according to the information in the instruction manual.***
- ***Do not install the product on a hot surface.***
- ***Check the inverter mounting orientation is correct.***
- ***The inverter must be installed on a strong surface securely with screws so that it will not drop.***
- ***Do not install or operate the inverter if it is damaged or has parts missing. This can result in breakdowns.***
- ***Prevent other conductive bodies such as screws and metal fragments or other flammable substance such as oil from entering the inverter.***
- ***As the inverter is a precision instrument, do not drop or subject it to impact.***
- ***If halogen-based materials (fluorine, chlorine, bromine, iodine, etc.) infiltrate into a Mitsubishi product, the product will be damaged. Halogen-based materials are often included in fumigant, which is used to sterilize or disinfect wooden packages. When packaging, prevent residual fumigant components from being infiltrated into Mitsubishi products, or use an alternative sterilization or disinfection method (heat disinfection, etc.) for packaging. Sterilization of disinfection of wooden package should also be performed before packaging the product.***
- ***Use the inverter under the following environmental conditions. Otherwise, the inverter may be damaged.***

| Operating Condition | FR-A820 | FR-A840 |
|---|---|---|
| Surrounding air temperature | LD, ND (initial setting), HD ratings: –10 °C to +50 °C (non-freezing)<br>SLD rating: –10 °C to +40 °C (non-freezing) | |
| Ambient humidity | With circuit board coating, IP55 compatible models: 95% RH or less (non-condensing),<br>Without circuit board coating: 90 % RH or less (non-condensing) | |
| Storage temperature | –20 °C to +65 °C ① | |
| Atmosphere | Indoors (free from corrosive gas, flammable gas, oil mist, dust and dirt) | |
| Altitude | Maximum 1000 m above sea level for standard operation. After that derate by 3 % for every extra 500 m up to 2500 m (91 %). | |
| Vibration | 5.9 m/s² or less ② at 10 to 55 Hz (directions of X, Y, Z axes) | |

① Temperature applicable for a short time, e.g. in transit.

② 2.9 m/s² or less for the FR-A840-04320(160K) or higher.

**Wiring**

**CAUTION:**

- ***Do not install assemblies or components (e. g. power factor correction capacitors) on the inverter output side, which are not approved from Mitsubishi. These devices on the inverter output side may be overheated or burn out.***
- ***The direction of rotation of the motor corresponds to the direction of rotation commands (STF/STR) only if the phase sequence (U, V, W) is maintained.***
- ***PM motor terminals (U, V, W) hold high-voltage while the PM motor is running even after the power is turned OFF. Before wiring, the PM motor must be confirmed to be stopped. Otherwise you may get an electric shock.***
- ***Never connect a PM motor to the commercial power supply.***
  ***Applying the commercial power supply to input terminals (U,V, W) of a PM motor will burn the PM motor. The PM motor must be connected with the output terminals (U, V, W) of the inverter.***

**Operation**

**WARNING:**

- ***When you have chosen the retry function, stay away from the equipment as it will restart suddenly after an alarm stop.***
- ***Since pressing the STOP/RESET key may not stop output depending on the function setting status, provide a circuit and switch separately to make an emergency stop (power off, mechanical brake operation for emergency stop, etc).***
- ***Make sure that the start signal is off before resetting the inverter alarm. A failure to do so may restart the motor suddenly.***
- ***Do not use a PM motor for an application where the PM motor is driven by its load and runs at a speed higher than the maximum motor speed.***
- ***Performing pre-excitation (LX signal and X13 signal) under torque control (Real sensorless vector control) may start the motor running at a low speed even when the start command (STF or STR) is not input The motor may run also at a low speed when the speed limit value = 0 with a start command input. It must be confirmed that the motor running will not cause any safety problem before performing pre-excitation.***
- ***The inverter can be started and stopped via the serial port communications link or the field bus. However, please note that depending on the settings of the communications parameters it may not be possible to stop the system via these connections if there is an error in the communications system or the data line. In configurations like this it is thus essential to install additional safety hardware that makes it possible to stop the system in an emergency (e.g. controller inhibit via control signal, external motor contactor etc). Clear and unambiguous warnings about this must be posted on site for the operating and service staff.***
- ***Use this inverter only with three-phase induction motors or with a PM motor. Connection of any other electrical equipment to the inverter output may damage the inverter as well as the equipment.***
- ***Do not modify the equipment.***
- ***Do not perform parts removal which is not instructed in this manual. Doing so may lead to fault or damage of the inverter***

**CAUTION:**

- ***The electronic thermal relay function does not guarantee protection of the motor from overheating. It is recommended to install both an external thermal and PTC thermistor for overheat protection.***
- ***Do not use a magnetic contactor on the inverter input for frequent starting/stopping of the inverter. Otherwise, the life of the inverter decreases.***
- ***Use a noise filter to reduce the effect of electromagnetic interference and follow the accepted EMC procedures for proper installation of frequency inverters. Otherwise nearby electronic equipment may be affected.***
- ***Take appropriate measures regarding harmonics. Otherwise this can endanger compensation systems or overload generators.***
- ***When driving a 400V class motor by the inverter, the motor must be an insulation-enhanced motor or measures must be taken to suppress surge voltage. Surge voltage attributable to the wiring constants may occur at the motor terminals, deteriorating the insulation of the motor.***
- ***Use a motor designed for inverter operation. (The stress for motor windings is bigger than in line power supply).***
- ***When parameter clear or all clear is performed, set again the required parameters before starting operations. Each parameter returns to the initial value.***
- ***The inverter can be easily set for high-speed operation. Before changing its setting, fully examine the performances of the motor and machine.***
- ***The DC braking function of the frequency inverter is not designed to continuously hold a load. Use an electro-mechanical holding brake on the motor for this purpose.***
- ***Before running an inverter which had been stored for a long period, always perform inspection and test operation.***
- ***For prevention of damage due to static electricity, touch nearby metal before touching this product to eliminate static electricity from your body.***
- ***Only one PM motor can be connected to an inverter.***
- ***A PM motor must be used under PM sensorless vector control. Do not use a synchronous motor, induction motor, or synchronous induction motor.***
- ***Do not connect a PM motor in the induction motor control settings (initial settings). Do not use an induction motor in the PM sensorless vector control settings. It will cause a failure.***
- ***In the system with a PM motor, the inverter power must be turned ON before closing the contacts of the contactor at the output side.***

**Test operation and adjustment**

**CAUTION:**

- ***Before starting operation, confirm and adjust the parameters. A failure to do so may cause some machines to make unexpected motions.***

### Emergency stop

**CAUTION:**

- ***Provide a safety backup such as an emergency brake which will prevent the machine and equipment from hazardous conditions if the inverter fails.***
- ***When the breaker on the inverter primary side trips, check for the wiring fault (short circuit), damage to internal parts of the inverter, etc. Identify the cause of the trip, then remove the cause and power on the breaker.***
- ***When the protective function is activated (i. e. the frequency inverter switches off with an error message), take the corresponding corrective action as described in the inverter manual, then reset the inverter, and resume operation.***

### Maintenance, inspection and parts replacement

**CAUTION:**

- ***Do not carry out a megger (insulation resistance) test on the control circuit of the inverter. It will cause a failure.***

### Disposing the inverter

**CAUTION:**

- ***Treat as industrial waste.***

### General instructions

Many of the diagrams and drawings in instruction manuals show the inverter without a cover, or partially open. Never run the inverter in this status. Always replace the cover and follow instruction manuals when operating the inverter. For more details on the PM motor, refer to the Instruction Manual of the PM motor.

For details of the inverter FR-A802 (Separated Converter Type) and the corresponding converter unit FR-CC2 refer to the respective Instruction Manuals (refer to page 1-7).

# Symbols used in the manual

Use of instructions

Instructions concerning important information are marked separately and are displayed as follows:

**NOTE** | Text of instruction

**Use of examples**

Examples are marked separately and are displayed as follows:

**Example** ▽ Example text △

**Use of numbering in the figures**

Numbering within the figures is displayed by white numbers within black circles and is explained in a table following it using the same number, e.g.:

❶ ❷ ❸ ❹

**Use of handling instructions**

Handling instructions are steps that must be carried out in their exact sequence during startup, operation, maintenance and similar operations.

They are numbered consecutively (black numbers in white circles):

① Text.

② Text.

③ Text.

**Use of footnotes in tables**

Instructions in tables are explained in footnotes underneath the tables (in superscript). There is a footnote character at the appropriate position in the table (in superscript).

If there are several footnotes for one table then these are numbered consecutively underneath the table (black numbers in white circle, in superscript):

① Text
② Text
③ Text

# Contents


**1 Introduction**

1.1 General remarks. . . . . 1-1
1.2 Product checking and accessories . . . . . 1-2
1.2.1 Inverter model . . . . . 1-2
1.2.2 Accessory . . . . . 1-3
1.2.3 How to read the SERIAL number . . . . . 1-3
1.3 Component names. . . . . 1-4
1.4 Operation steps . . . . . 1-6
1.5 Related manuals . . . . . 1-7

**2 Installation and wiring**

2.1 Peripheral devices. . . . . 2-1
2.1.1 Inverter and peripheral devices . . . . . 2-1
2.1.2 Peripheral devices . . . . . 2-4
2.2 Removal and reinstallation of the front cover. . . . . 2-7
2.3 Installation of the inverter and enclosure design . . . . . 2-12
2.3.1 Inverter installation environment . . . . . 2-12
2.3.2 Cooling system types for inverter enclosure . . . . . 2-15
2.3.3 Inverter installation. . . . . 2-16
2.3.4 Heatsink protrusion attachment procedure . . . . . 2-19
2.4 Terminal connection diagrams . . . . . 2-21
2.4.1 FM type . . . . . 2-21
2.4.2 CA type . . . . . 2-23
2.5 Main circuit terminals . . . . . 2-25
2.5.1 Details on the main circuit terminals . . . . . 2-25
2.5.2 Terminal layout of the main circuit terminals, wiring of power supply and the motor. . . . . 2-26
2.5.3 Applicable cables and the wiring length. . . . . 2-29
2.5.4 Earthing (grounding) precautions. . . . . 2-34
2.6 Control circuit. . . . . 2-36
2.6.1 Details on the control circuit terminals . . . . . 2-36
2.6.2 Control logic (sink/source) change . . . . . 2-40
2.6.3 Wiring of control circuit. . . . . 2-43
2.6.4 Wiring precautions . . . . . 2-47
2.6.5 When using separate power supplies for the control circuit and the main circuit . . . . . 2-48
2.6.6 When supplying 24 V external power to the control circuit. . . . . 2-51
2.6.7 Safety stop function . . . . . 2-54
2.7 Communication connectors and terminals . . . . . 2-57
2.7.1 PU connector . . . . . 2-57
2.7.2 USB connector . . . . . 2-58
2.7.3 RS-485 terminal block . . . . . 2-60

2.8 Connection of motor with encoder (vector control) ..... 2-61
2.9 Connection of stand-alone option units ..... 2-76
2.9.1 Connection of the dedicated external brake resistor (FR-ABR) ..... 2-76
2.9.2 Connection of the brake unit (FR-BU2) ..... 2-79
2.9.3 Connection of the brake unit (FR-BU) ..... 2-82
2.9.4 Connection of the brake unit (BU type) ..... 2-83
2.9.5 Connection of the high power factor converter (FR-HC2) ..... 2-84
2.9.6 Connection of the power regeneration common converter (FR-CV) ..... 2-86
2.9.7 Connection of the power regeneration converter (MT-RC) ..... 2-87
2.9.8 Connection of the DC reactor (FR-HEL) ..... 2-88

**3 Precautions for use of the inverter**

3.1 Electro-magnetic interference (EMI) and leakage currents ..... 3-1
3.1.1 Leakage currents and countermeasures ..... 3-1
3.1.2 Countermeasures against inverter-generated EMI ..... 3-6
3.1.3 Built-in EMC filter ..... 3-9
3.2 Power supply harmonics ..... 3-11
3.2.1 Power supply harmonics ..... 3-11
3.2.2 Harmonic suppression guidelines in Japan ..... 3-12
3.3 Installation of a reactor ..... 3-16
3.4 Power-OFF and magnetic contactor (MC) ..... 3-17
3.5 Countermeasures against deterioration of the 400 V class motor insulation ..... 3-19
3.6 Checklist before starting operation ..... 3-20
3.7 Failsafe system which uses the inverter ..... 3-23

**4 Basic operation**

4.1 Operation panel (FR-DU08) ..... 4-1
4.1.1 Components of the operation panel (FR-DU08) ..... 4-1
4.1.2 Basic operation of the operation panel ..... 4-3
4.1.3 Correspondences between digital and actual characters ..... 4-5
4.1.4 Changing the parameter setting value ..... 4-6
4.2 Monitoring the inverter status ..... 4-7
4.2.1 Monitoring of output current and output voltage ..... 4-7
4.2.2 First monitored item ..... 4-7
4.2.3 Displaying the set frequency ..... 4-8
4.3 Easy operation mode setting (easy setting mode) ..... 4-9
4.4 Frequently-used parameters (simple mode parameters) ..... 4-11
4.4.1 Simple mode parameter list ..... 4-11
4.5 Basic operation procedure (PU operation) ..... 4-13
4.5.1 Operating at the set frequency (example: operating at 30 Hz) ..... 4-13
4.5.2 Using the setting dial like a potentiometer to perform operation ..... 4-15
4.5.3 Setting the frequency by switches (multi-speed setting) ..... 4-16
4.5.4 Setting the frequency with analog signals (voltage input) ..... 4-18
4.5.5 Using an analog signal (current input) to give a frequency command ..... 4-20

4.6 Basic operation procedure (External operation) ....4-22
4.6.1 Using the frequency set by the operation panel ....4-22
4.6.2 Setting the frequency by switches (multi-speed setting) (Pr. 4 to Pr. 6) ....4-24
4.6.3 Setting the frequency with analog signals (voltage input)....4-26
4.6.4 Changing the frequency (60 Hz, initial value) at the maximum voltage input (5 V, initial value) ....4-27
4.6.5 Using an analog signal (current input) to give a frequency command ....4-28
4.6.6 Changing the frequency (60 Hz, initial value) at the maximum current input (at 20 mA, initial value) ....4-29
4.7 Basic operation procedure (JOG operation) ....4-30
4.7.1 Performing JOG operation using external signals ....4-30
4.7.2 JOG operation from the operation panel ....4-31

**5 Parameters**

5.1 Parameter List....5-2
5.1.1 Parameter list (by number) ....5-2
5.1.2 Group parameter display ....5-32
5.1.3 Parameter list (by function group) ....5-34
5.2 Control method....5-48
5.2.1 Vector control and Real sensorless vector control....5-52
5.2.2 Changing the control method ....5-55
5.2.3 Selecting the Advanced magnetic flux vector control ....5-66
5.2.4 Selecting the PM sensorless vector control ....5-69
5.2.5 Low-speed range torque characteristics ....5-74
5.3 Speed control under Real sensorless vector control, vector control, PM sensorless vector control ....5-75
5.3.1 Setting procedure of Real sensorless vector control (speed control) ....5-78
5.3.2 Setting procedure of vector control (speed control) ....5-80
5.3.3 Setting procedure of PM sensorless vector control (speed control) ....5-81
5.3.4 Setting the torque limit level ....5-83
5.3.5 Performing high-accuracy, fast-response control (gain adjustment for Real sensorless vector control, vector control and PM sensorless vector control) ....5-94
5.3.6 Troubleshooting in the speed control ....5-104
5.3.7 Speed feed forward control and model adaptive speed control ....5-106
5.3.8 Torque bias ....5-110
5.3.9 Avoiding motor overrunning ....5-115
5.3.10 Notch filter ....5-118
5.4 Torque control under Real sensorless vector control and vector control....5-120
5.4.1 Torque control ....5-120
5.4.2 Setting procedure of Real sensorless vector control (torque control) ....5-126
5.4.3 Setting procedure for vector control (torque control) ....5-128
5.4.4 Torque command ....5-129
5.4.5 Speed limit ....5-133
5.4.6 Torque control gain adjustment ....5-141
5.4.7 Troubleshooting in torque control ....5-143
5.4.8 Torque control by variable-current limiter control ....5-144

5.5 Position control under vector control and PM sensorless vector control ..... 5-146
5.5.1 About position control ..... 5-146
5.5.2 Setting procedure of vector control (position control) ..... 5-149
5.5.3 Set the procedure of PM sensorless vector control (position control) ..... 5-150
5.5.4 Simple positioning function by parameters ..... 5-151
5.5.5 Position control by inverter pulse train input ..... 5-167
5.5.6 Electronic gear setting ..... 5-171
5.5.7 Position adjustment parameter settings ..... 5-173
5.5.8 Position control gain adjustment ..... 5-175
5.5.9 Troubleshooting in position control ..... 5-177
5.6 Real sensorless vector control, vector control, PM sensorless vector control adjustment ..... 5-180
5.6.1 Speed detection filter and torque detection filter ..... 5-180
5.6.2 Excitation ratio ..... 5-181
5.7 (E) Environment setting parameters ..... 5-182
5.7.1 Simple clock function ..... 5-183
5.7.2 Reset selection/disconnected PU detection/PU stop selection ..... 5-184
5.7.3 PU display language selection ..... 5-188
5.7.4 Buzzer control ..... 5-188
5.7.5 PU contrast adjustment ..... 5-188
5.7.6 Display-off mode ..... 5-189
5.7.7 Resetting USB host errors ..... 5-189
5.7.8 Setting dial potentiometer mode/key lock operation selection ..... 5-190
5.7.9 Frequency change increment amount setting ..... 5-192
5.7.10 Multiple rating setting ..... 5-193
5.7.11 Using the power supply exceeding 480V ..... 5-195
5.7.12 Parameter write selection ..... 5-195
5.7.13 Password function ..... 5-199
5.7.14 Free parameter ..... 5-203
5.7.15 Setting multiple parameters as a batch ..... 5-203
5.7.16 Extended parameter display and user group function ..... 5-208
5.7.17 PWM carrier frequency and Soft-PWM control ..... 5-211
5.7.18 Inverter parts life display ..... 5-214
5.7.19 Maintenance timer alarm ..... 5-219
5.7.20 Current average value monitor signal ..... 5-221
5.8 (F) Setting of acceleration/deceleration time and acceleration/deceleration pattern ..... 5-225
5.8.1 Setting the acceleration and deceleration time ..... 5-225
5.8.2 Acceleration/deceleration pattern ..... 5-232
5.8.3 Remote setting function ..... 5-239
5.8.4 Starting frequency and start-time hold function ..... 5-243
5.8.5 Minimum motor speed frequency and hold function at motor start up ..... 5-245
5.8.6 Shortest acceleration/deceleration and optimum acceleration/deceleration (automatic acceleration/deceleration) ..... 5-247
5.8.7 Lift operation (automatic acceleration/deceleration) ..... 5-252

5.9 (D) Operation command and frequency command ..... 5-254
5.9.1 Operation mode selection ..... 5-255
5.9.2 Startup in Network operation mode at power-ON ..... 5-264
5.9.3 Start command source and frequency command source during communication operation ..... 5-266
5.9.4 Reverse rotation prevention selection ..... 5-273
5.9.5 Frequency setting via pulse train input ..... 5-274
5.9.6 JOG operation ..... 5-278
5.9.7 Operation by multi-speed setting ..... 5-280
5.10 (H) Protective function parameter ..... 5-283
5.10.1 Motor overheat protection (electronic thermal O/L relay) ..... 5-284
5.10.2 Fault definition ..... 5-292
5.10.3 Cooling fan operation selection ..... 5-293
5.10.4 Earth (ground) fault detection at start ..... 5-294
5.10.5 Varying the activation level of the undervoltage protective function ..... 5-294
5.10.6 Initiating a protective function ..... 5-295
5.10.7 I/O phase loss protection selection ..... 5-296
5.10.8 Retry function ..... 5-297
5.10.9 Limiting the output frequency (maximum/minimum frequency) ..... 5-300
5.10.10 Avoiding the mechanical resonance points (frequency jump) ..... 5-302
5.10.11 Stall prevention operation ..... 5-304
5.10.12 Motor overspeeding detection ..... 5-312
5.11 (M) Monitor display and monitor output signal ..... 5-313
5.11.1 Speed display and rotations per minute setting ..... 5-314
5.11.2 Monitor indicator selection using operation panel or via communication ..... 5-317
5.11.3 Monitor output to terminals FM/CA and AM ..... 5-330
5.11.4 Adjusting terminals FM/CA and AM ..... 5-337
5.11.5 Energy saving monitor ..... 5-343
5.11.6 Output terminal function selection ..... 5-350
5.11.7 Output frequency detection ..... 5-361
5.11.8 Output current detection function ..... 5-365
5.11.9 Output torque detection ..... 5-367
5.11.10 Remote output function ..... 5-368
5.11.11 Analog remote output function ..... 5-370
5.11.12 Fault code output selection ..... 5-373
5.11.13 Pulse train output of output power ..... 5-374
5.11.14 Detection of control circuit temperature ..... 5-375

5.12 (T) Multi-Function Input Terminal Parameters ..... 5-376
5.12.1 Analog input selection ..... 5-376
5.12.2 Analog input terminal (terminal 1, 4) function assignment ..... 5-381
5.12.3 Analog input compensation ..... 5-382
5.12.4 Analog input responsiveness and noise elimination ..... 5-386
5.12.5 Frequency setting voltage (current) bias and gain ..... 5-388
5.12.6 Bias and gain for torque (magnetic flux) and set voltage (current) ..... 5-396
5.12.7 Checking of current input on analog input terminal ..... 5-404
5.12.8 Input terminal function selection ..... 5-409
5.12.9 Inverter output shutoff signal ..... 5-413
5.12.10 Selecting operation condition of the second function selection signal (RT) and the third function selection signal (X9) ..... 5-415
5.12.11 Start signal operation selection ..... 5-417
5.13 (C) Motor constant parameters ..... 5-421
5.13.1 Applied motor (Pr. 71, Pr. 450) ..... 5-421
5.13.2 Offline auto tuning ..... 5-426
5.13.3 Offline auto tuning for a PM motor (motor constant tuning) ..... 5-440
5.13.4 Online auto tuning ..... 5-451
5.13.5 Signal loss detection of encoder signals ..... 5-455
5.14 (A) Application parameters ..... 5-456
5.14.1 Electronic bypass function ..... 5-457
5.14.2 Self power management ..... 5-465
5.14.3 Brake sequence function ..... 5-469
5.14.4 Stop-on-contact control ..... 5-474
5.14.5 Load torque high speed frequency control ..... 5-478
5.14.6 Traverse function ..... 5-482
5.14.7 Swinging suppression control ..... 5-484
5.14.8 Orientation control ..... 5-487
5.14.9 PID control ..... 5-504
5.14.10 Changing the display increment of numerical values used in PID control ..... 5-521
5.14.11 PID pre-charge function ..... 5-525
5.14.12 Dancer control ..... 5-530
5.14.13 Automatic restart after instantaneous power failure/flying start with an induction motor ..... 5-540
5.14.14 Automatic restart after instantaneous power failure/flying start with an IPM motor ..... 5-549
5.14.15 Offline auto tuning for a frequency search ..... 5-552
5.14.16 Power failure time deceleration-to-stop function ..... 5-558
5.14.17 PLC function ..... 5-564
5.14.18 Trace function ..... 5-568
5.15 (N) Operation via communication and its settings ..... 5-577
5.15.1 Wiring and configuration of PU connector ..... 5-577
5.15.2 Wiring and configuration of RS-485 terminals ..... 5-579
5.15.3 Initial setting of operation via communication ..... 5-583
5.15.4 Initial settings and specifications of RS-485 communication ..... 5-587
5.15.5 Mitsubishi inverter protocol (computer link communication) ..... 5-589
5.15.6 Modbus-RTU communication specification ..... 5-607
5.15.7 USB device communication ..... 5-625
5.15.8 Automatic connection with GOT ..... 5-626

5.16 (G) Control parameters ..... 5-628
5.16.1 Manual torque boost ..... 5-629
5.16.2 Base frequency, voltage ..... 5-631
5.16.3 Load pattern selection ..... 5-634
5.16.4 Energy saving control ..... 5-637
5.16.5 Adjustable 5 points V/F ..... 5-638
5.16.6 DC injection brake, zero speed control, and servo lock ..... 5-640
5.16.7 Output stop function ..... 5-648
5.16.8 Stop selection ..... 5-650
5.16.9 Regenerative brake selection and DC feeding mode ..... 5-652
5.16.10 Regeneration avoidance function ..... 5-662
5.16.11 Increased magnetic excitation deceleration ..... 5-666
5.16.12 Slip compensation ..... 5-668
5.16.13 Encoder feedback control ..... 5-669
5.16.14 Droop control ..... 5-672
5.16.15 Speed smoothing control ..... 5-675
5.17 Parameter clear / all parameter clear ..... 5-676
5.18 Copying and verifying parameters on the operation panel ..... 5-677
5.18.1 Parameter copy ..... 5-678
5.18.2 Parameter verification ..... 5-679
5.19 Copying and verifying parameters using USB memory ..... 5-680
5.20 Checking parameters changed from their initial values (Initial value change list) ..... 5-684

**6 Protective functions**

6.1 Inverter fault and alarm indications ..... 6-1
6.2 Reset method for the protective functions ..... 6-2
6.3 Check and clear of the faults history ..... 6-3
6.3.1 Check for the faults history ..... 6-3
6.3.2 Faults history clearing procedure ..... 6-4
6.4 The list of fault displays ..... 6-5
6.5 Causes and corrective actions ..... 6-9
6.5.1 Error message ..... 6-9
6.5.2 Warning ..... 6-13
6.5.3 Alarm ..... 6-17
6.5.4 Fault ..... 6-18

6.6 Check first when you have a trouble ..... 6-35
6.6.1 Motor does not start ..... 6-35
6.6.2 Motor or machine is making abnormal acoustic noise ..... 6-38
6.6.3 Inverter generates abnormal noise ..... 6-39
6.6.4 Motor generates heat abnormally ..... 6-39
6.6.5 Motor rotates in the opposite direction ..... 6-39
6.6.6 Speed greatly differs from the setting ..... 6-40
6.6.7 Acceleration/deceleration is not smooth ..... 6-40
6.6.8 Speed varies during operation ..... 6-41
6.6.9 Operation mode is not changed properly ..... 6-42
6.6.10 Operation panel (FR-DU08) display is not operating ..... 6-42
6.6.11 Motor current is too large ..... 6-42
6.6.12 Speed does not accelerate ..... 6-43
6.6.13 Unable to write parameter setting ..... 6-44
6.6.14 Power lamp is not lit ..... 6-44

**7 Precautions for maintenance and inspection**

7.1 Inspection item ..... 7-1
7.1.1 Daily inspection ..... 7-1
7.1.2 Periodic inspection ..... 7-1
7.1.3 Daily and periodic inspection ..... 7-2
7.1.4 Checking the inverter and converter modules ..... 7-4
7.1.5 Cleaning ..... 7-5
7.1.6 Replacement of parts ..... 7-6
7.1.7 Inverter replacement ..... 7-11
7.2 Measurement of main circuit voltages, currents and powers ..... 7-12
7.2.1 Measurement of powers ..... 7-15
7.2.2 Measurement of voltages and use of PT ..... 7-16
7.2.3 Measurement of currents ..... 7-17
7.2.4 Use of CT and transducer ..... 7-18
7.2.5 Measurement of inverter input power factor ..... 7-18
7.2.6 Measurement of converter output voltage (across terminals P and N) ..... 7-18
7.2.7 Measurement of inverter output frequency ..... 7-18
7.2.8 Insulation resistance test using megger ..... 7-19
7.2.9 Pressure test ..... 7-19

**8 Specifications**

8.1 Inverter rating . . . . . 8-1
8.1.1 200 V class . . . . . 8-1
8.1.2 400 V class . . . . . 8-2
8.2 Motor rating . . . . . 8-5
8.2.1 Vector control dedicated motor SF-V5RU (1500r/min series) . . . . . 8-5
8.2.2 Vector control dedicated motor SF-THY . . . . . 8-7
8.2.3 Torque characteristics . . . . . 8-9
8.3 Common specifications . . . . . 8-10
8.4 Outline dimension drawings . . . . . 8-12
8.4.1 Inverter outline dimension drawings . . . . . 8-12
8.4.2 Dedicated motor outline dimension drawings . . . . . 8-21

**A Appendix**

A.1 For customers replacing the conventional model with this inverter . . . . . A-1
A.1.1 Replacement of the FR-A700 series . . . . . A-1
A.1.2 Replacement of the FR-A500(L) series . . . . . A-3
A.2 Specification comparison between PM sensorless vector control and induction motor control . . . . . A-4
A.3 Parameters (function codes) and instruction codes under different control methods . . . . . A-5
A.4 For customers using HMS network options . . . . . A-37
A.4.1 List of inverter monitored items . . . . . A-37
A.4.2 Direct command mode for position control . . . . . A-39
A.5 EC Declarations of Conformity . . . . . A-41
A.5.1 Low Voltage Directive . . . . . A-41
A.5.2 EMC Directive . . . . . A-46

# 1 Introduction

## 1.1 General remarks

**Abbreviations**

DU .....Operation panel (FR-DU08)

PU .....Operation panel (FR-DU08) and parameter unit (FR-PU07)

Inverter .....Mitsubishi inverter FR-A800 series

Pr. .....Parameter number (Number assigned to function)

PU operation .....Operation using the PU (FR-DU08/FR-PU07)

External operation .....Operation using the control circuit signals

Combined operation .....Combined operation using the PU (FR-DU08/FR-PU07) .....and External operation

SF-JR.....Mitsubishi standard motor

SF-HRCA .....Mitsubishi constant-torque motor

SF-V5RU.....Vector control dedicated motor

MM-CF .....Mitsubishi IPM motor

**Trademarks**

- Microsoft and Visual C++ are registered trademarks of Microsoft Corporation in the United States and other countries.
- Other company and product names herein are the trademarks and registered trademarks of their respective owners.

**Notes on descriptions in this Instruction Manual**

- Connection diagrams in this Instruction Manual appear with the control logic of the input terminal as sink logic, unless otherwise specified. (For the control logic, refer to page 2-40.)

**Harmonic Suppression Guidelines**

All the models of the inverters used by specific consumers are covered by "the Harmonic Suppression Guidelines for Consumers Who Receive High Voltage or Special High Voltage". (For details, refer to page 3-12).

# 1.2 Product checking and accessories

Unpack the product and check the capacity plate on the front cover and the rating plate on the side to ensure that the model agrees with the order and the product is intact.

## 1.2.1 Inverter model

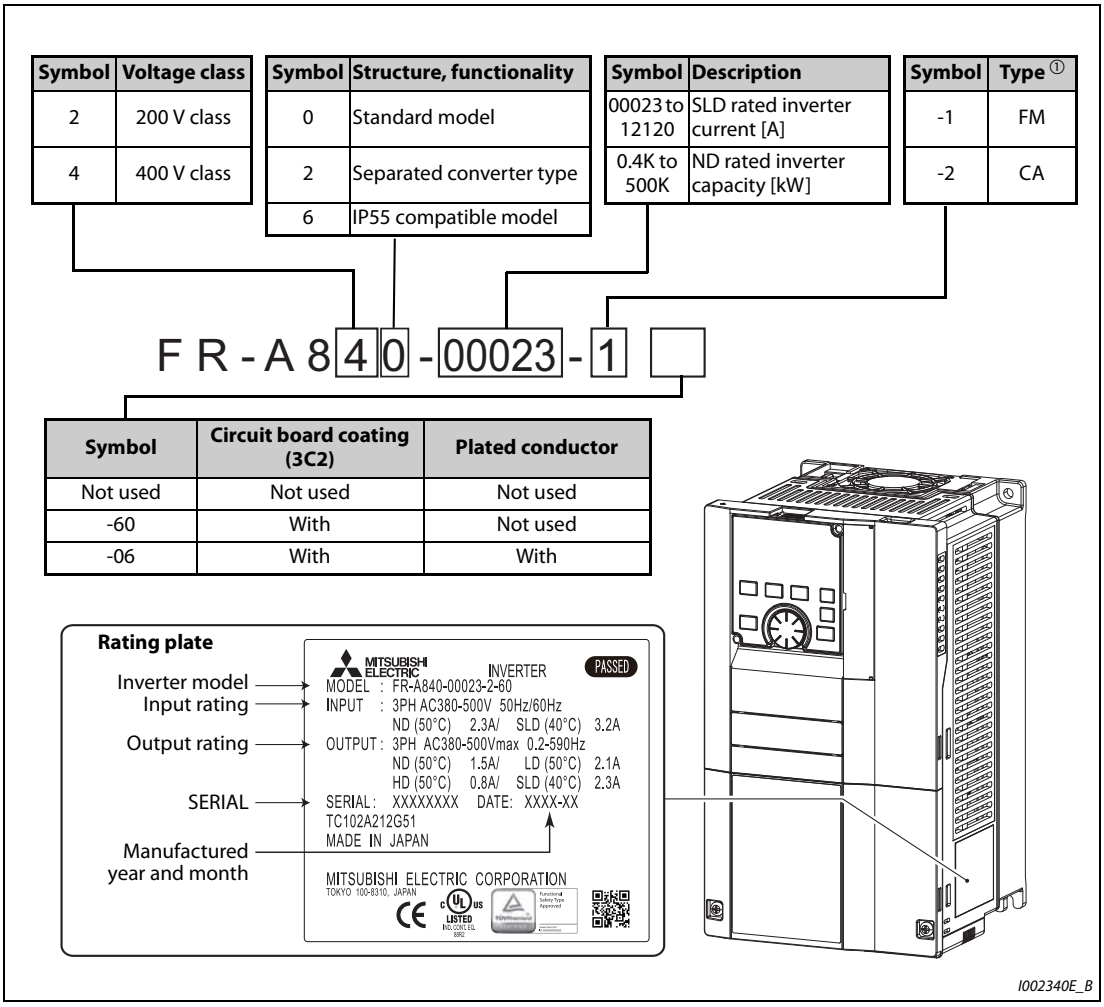


***Fig. 1-1:*** *Inverter model FR-A800*

① Specification differs by the type as follows.

| Type | Signal output | Initial setting | | | |
|---|---|---|---|---|---|
| | | Built-in EMC filter | Control logic | Rated frequency | Pr. 19 "Base frequency voltage" |
| FM (terminal FM equipped model) | Terminal FM (pulse train output)<br>Terminal AM (analog voltage output (0 to ±10 V DC)) | OFF | Sink logic | 60 Hz | 9999 (same as the power supply voltage) |
| CA (terminal CA equipped model) | Terminal CA (analog current output (0 to 20 mA DC))<br>Terminal AM (analog voltage output (0 to ±10 V DC)) | ON | Source logic | 50 Hz | 8888 (95% of the power supply voltage) |

***Tab. 1-1:*** *Differences between the types*

**NOTES**

The rating plate shows the rated inverter current in SLD operation (Super Light Duty). The overload current rating at SLD is 110 % of the rated current for 60 s and 120 % for 3 s at surrounding air temperature of max. 40 °C.

The inverter model name used in this installation guide consists of the inverter model, e. g. FR-A840-00023-2-60 and the applicable motor capacity in brackets specified in [kW]. This approach helps for better understanding and for choosing the right motor. For further specification details like capacity, current or overload current rating refer to chapter 8.

For selecting the right frequency inverter you should know details of your application and especially the load characteristic.

## 1.2.2 Accessory

### Fan cover fixing screws

These screws are necessary for compliance with the EU Directives.
(Refer to the Installation Guideline.)

| Capacity | Screw size (mm) | Quantity |
|---|---|---|
| FR-A820-00105(1.5K) to FR-A820-00250(3.7K)<br>FR-A840-00083(2.2K), FR-A840-00126(3.7K) | M3 × 35 | 1 |
| FR-A820-00340(5.5K) to FR-A820-00490(7.5K)<br>FR-A840-00170(5.5K) to FR-A840-00250(7.5K) | M3 × 35 | 2 |
| FR-A820-00630(11K) to FR-A820-01250(22K)<br>FR-A840-00310(11K), FR-A840-00620(22K) | M4 × 40 | 2 |

***Tab. 1-2:*** *Fan cover fixing screws*

### Eyebolt for hanging the inverter

| Capacity | Eyebolt size | Quantity |
|---|---|---|
| FR-A840-04320(160K) to FR-A840-06830(280K) | M12 | 2 |

***Tab. 1-3:*** *Eyebolts for hanging the inverter*

## 1.2.3 How to read the SERIAL number

Rating plate example

| □ | ○ | ○ | ○○○○○○ |
|---|---|---|---|
| Symbol | Year | Month | Control number |
| SERIAL | | | |

The SERIAL consists of one symbol, two characters indicating the production year and month, and six characters indicating the control number. The last digit of the production year is indicated as the Year, and the Month is indicated by 1 to 9, X (October), Y (November), or Z (December).

# 1.3 Component names

Component names are shown below.

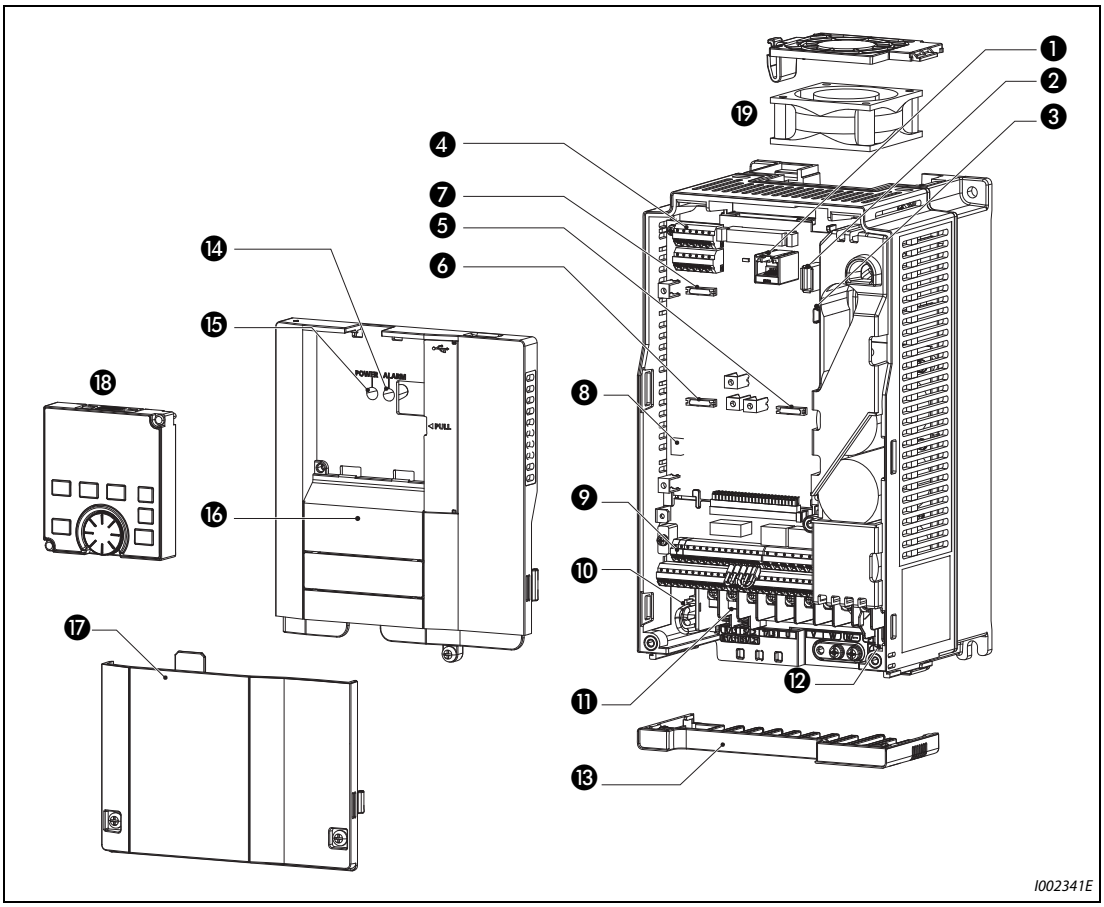


***Fig. 1-2:*** *Appearance and structure*

| Symbol | Name | Description | Refer to page |
|---|---|---|---|
| ❶ | PU connector | Connects the operation panel (FR-DU08) or the parameter unit (FR-PU07). This connector also enables the RS-485 communication. | 2-57 |
| ❷ | USB A connector | Connects a USB memory device. | 2-58 |
| ❸ | USB mini B connector | Connects a personal computer and enables communication with FR Configurator2. | 2-58 |
| ❹ | RS-485 terminals | Enables RS-485, Modbus-RTU communication. | 2-60 |
| ❺ | Plug-in option connector1 | Connects a plug-in option or a communication option. | Instruction Manual of the option |
| ❻ | Plug-in option connector2 | | |
| ❼ | Plug-in option connector3 | | |
| ❽ | Voltage/current input switch | Selects between voltage and current for the terminal 2 and 4 inputs. | 5-376 |
| ❾ | Control circuit terminal block | Connects cables for the control circuit. | 2-36 |
| ❿ | EMC filter ON/OFF connector | Turns ON/OFF the EMC filter. | 3-9 |
| ⓫ | Main circuit terminal block | Connects cables for the main circuit. | 2-25 |
| ⓬ | Charge lamp | Stays ON while the power is supplied to the main circuit. | 2-26 |
| ⓭ | Combed shaped wiring cover | This cover is removable without unplugging cables. (FR-A820-01250(22K) or lower, FR-A840-00620(22K) or lower) | 2-8 |
| ⓮ | Alarm lamp | Turns ON when the protective function of the inverter is activated. | 2-26 |
| ⓯ | Power lamp | Stays ON while the power is supplied to the control circuit (R1/L11, S1/L21). | 2-26 |
| ⓰ | Front cover | Remove this cover for the installation of the product, installation of a plug-in (communication) option, RS-485 terminal wiring, switching of the voltage/current input switch, etc. | 2-7 |
| ⓱ | Terminal block cover | Remove this cover for wiring. | 2-8 |
| ⓲ | Operation panel (FR-DU08) | Operates and monitors the inverter. | 4-1 |
| ⓳ | Cooling fan | Cools the inverter. (FR-A820-00105(1.5K) or higher, FR-A840-00083(2.2K) or higher) | 7-7 |

***Tab. 1-4:*** *Inverter component names from fig. 1-2*

# 1.4 Operation steps

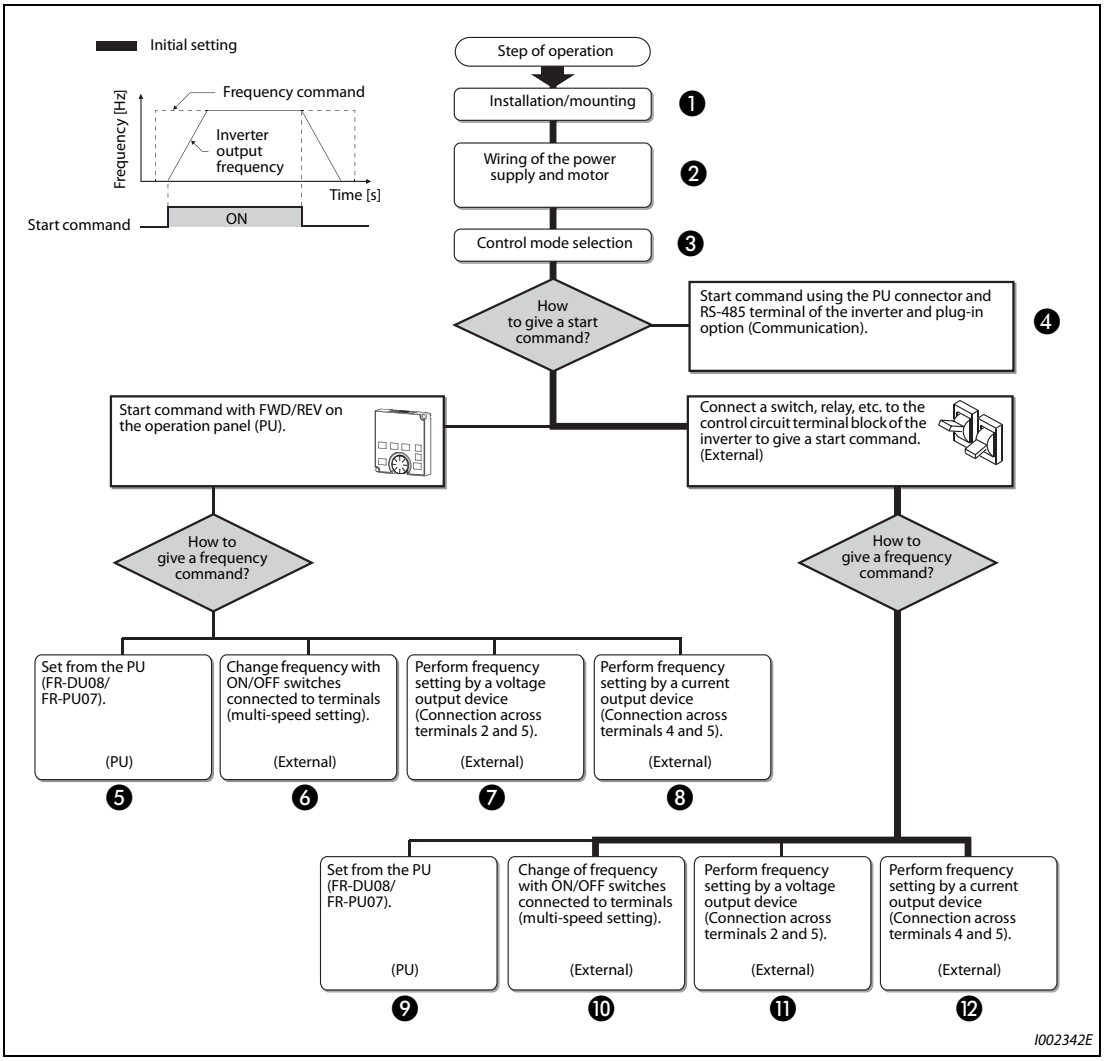


***Fig. 1-3:*** *Flow chart of the operation steps*

| Symbol | Overview | Refer to page |
|---|---|---|
| ❶ | Install the inverter. | 2-12 |
| ❷ | Perform wiring for the power supply and the motor. | 2-26 |
| ❸ | Select the control method (V/F control, Advanced magnetic flux vector control, vector control, or PM sensorless vector control). | 5-55 |
| ❹ | Input the start command via communication. | 5-182 |
| ❺ | The PU gives both start and frequency commands.<br>(PU operation mode) | 4-13 |
| ❻ | The PU gives a start command, and inputs to terminal RH, RM, and RL give a frequency command.<br>(External/PU combined operation mode 2) | 4-16 |
| ❼ | The PU gives a start command, and voltage input to terminal 2 gives a frequency command.<br>(External/PU combined operation mode 2) | 4-18 |
| ❽ | The PU gives a start command, and current input to terminal 4 gives a frequency command.<br>(External/PU combined operation mode 2) | 4-20 |
| ❾ | Inputs to terminal STF and STR give a start command, and the PU gives a frequency command.<br>(External/PU combined operation mode 1) | 4-22 |
| ❿ | Inputs to terminal STF and STR give a start command, and inputs to terminal RH, RM, and RL give a frequency command.<br>(External operation mode) | 4-24 |
| ⓫ | Inputs to terminal STF and STR give a start command, and voltage input to terminal 2 gives a frequency command.<br>(External operation mode) | 4-26 |
| ⓬ | Inputs to terminal STF and STR give a start command, and current input to terminal 4 gives a frequency command.<br>(External operation mode) | 4-28 |

***Tab. 1-5:*** *Steps of operation*

## 1.5 Related manuals

The manuals related to the FR-A800 inverters are shown below:

| Manual name | Article number |
|---|---|
| FR-A800 Installation Guideline | 274662 |
| FR-A802 (Separated Converter Type) Instruction Manual (Hardware) | |
| FR-CC2 (Converter unit) Instruction Manual | |
| FR-A806 (IP55/UL Type 12 specification) Instruction Manual (Hardware) | |
| FR Configurator2 Instruction Manual | |
| FR-A800 PLC function programming manual | |
| FR-A800 Safety stop function instruction manual | BCN-A23228-001 |

***Tab. 1-6:*** *FR-A800 inverters related manuals*

For details of the separated converter type refer to the FR-A802 (Separated Converter Type) Instruction Manual (Hardware).

For details of the IP55 compatible model refer to FR-A806 (IP55/UL Type12 specification) Instruction Manual (Hardware).

# 2 Installation and wiring

## 2.1 Peripheral devices

### 2.1.1 Inverter and peripheral devices

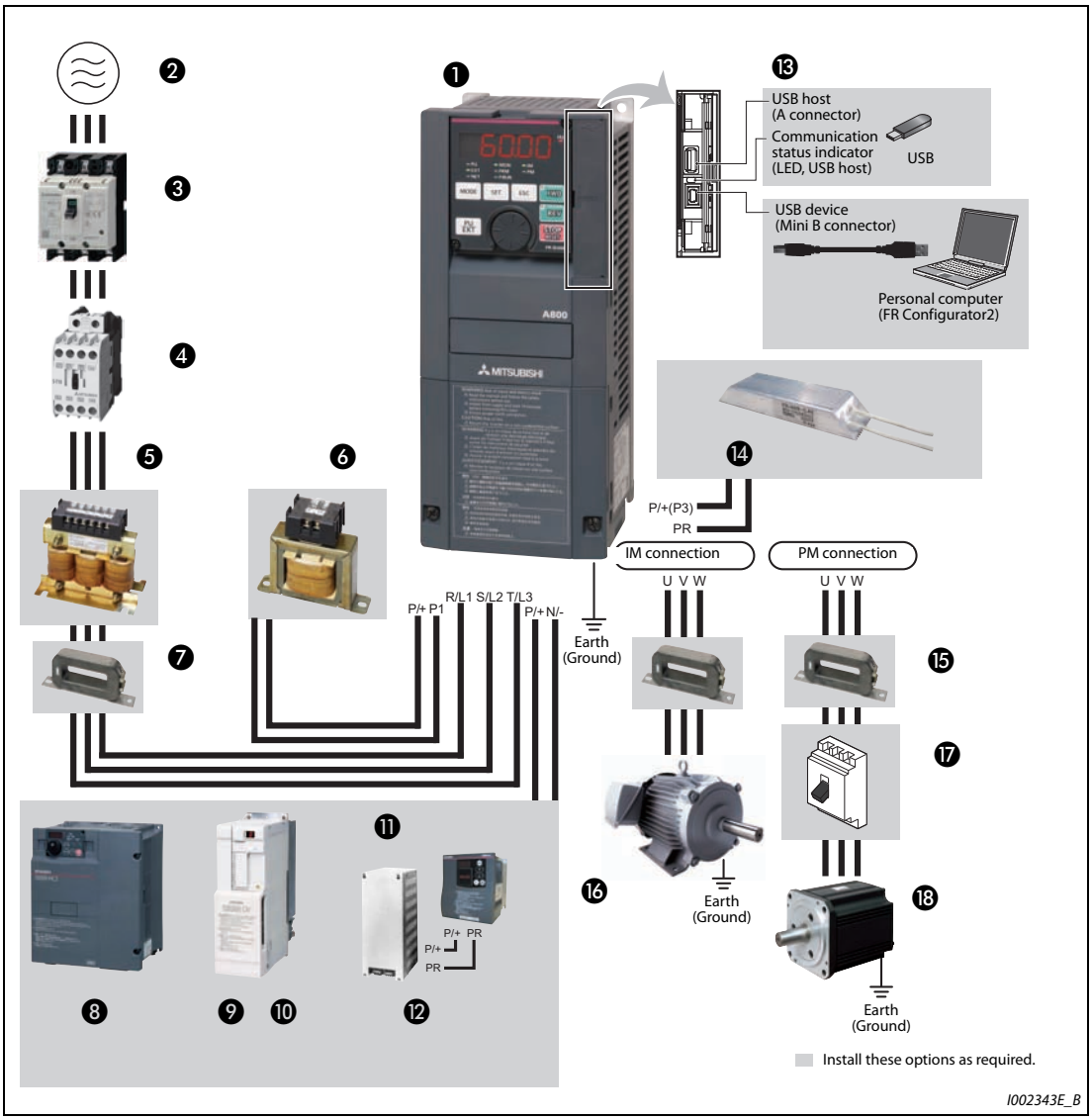


***Fig. 2-1:*** *System configuration overview*

**NOTES**

To prevent an electric shock, always earth (ground) the motor and inverter.

Do not install a power factor correction capacitor or surge suppressor or capacitor type filter on the inverter's output side. Doing so will cause the inverter to trip or the capacitor and surge suppressor to be damaged. If any of the above devices is connected, immediately remove it. When installing a molded case circuit breaker on the output side of the inverter, contact the manufacturer of the molded case circuit breaker.

Electromagnetic wave interference
The input/output (main circuit) of the inverter includes high frequency components, which may interfere with the communication devices (such as AM radios) used near the inverter. In this case, activating the EMC filter may minimize interference. (Refer to page 3-9.)

For details of options and peripheral devices, refer to the respective Instruction Manual.

A PM motor cannot be driven by the commercial power supply.

A PM motor is a motor with permanent magnets embedded inside. High voltage is generated at the motor terminals while the motor is running. Before closing the contactor at the output side, make sure that the inverter power is ON and the motor is stopped.

| Symbol | Name | Overview | Refer to page |
|---|---|---|---|
| ❶ | Inverter (FR-A800) | The life of the inverter is influenced by the surrounding air temperature.<br>The surrounding air temperature should be as low as possible within the permissible range. This must be noted especially when the inverter is installed in an enclosure.<br>Incorrect wiring may lead to damage of the inverter. The control signal lines must be kept fully away from the main circuit lines to protect them from noise.<br>The built-in EMC filter can reduce the noise. | 2-12<br>2-21<br>3-9 |
| ❷ | Three-phase AC power supply | Must be within the permissible power supply specifications of the inverter. | 8-1 |
| ❸ | Molded case circuit breaker (MCCB), earth leakage circuit breaker (ELB), or fuse | Must be selected carefully since an inrush current flows in the inverter at power ON. | 2-4 |
| ❹ | Magnetic contactor (MC) | Install this to ensure safety.<br>Do not use this to start and stop the inverter. Doing so will shorten the life of the inverter. | 3-17 |
| ❺ | AC reactor (FR-HAL) | Install this to suppress harmonics and to improve the power factor.<br>An AC reactor (FR-HAL) (option) is required when installing the inverter near a large power supply system (1000 kVA or more). Under such condition, the inverter may be damaged if you do not use a reactor.<br>Select a reactor according to the applied motor capacity. | 3-16 |
| ❻ | DC reactor (FR-HEL) | Install this to suppress harmonics and to improve the power factor.<br>Select a reactor according to the applicable motor capacity.<br>For the FR-A820-03800(75K) or higher and FR-A840-02160(75K) or higher, or a motor with 75 kW or higher, always connect FR-HEL.<br>When using the DC reactor with the FR-A820-03160(55K) or lower, FR-A840-01800(55K) or lower, remove the jumper across terminals P/+ and P1 before connecting the DC reactor to the inverter. | 3-16 |
| ❼ | Noise filter (FR-BLF) | The FR-A820-03160(55K) or lower, f or lower are equipped with the common mode choke. | 3-6 |
| ❽ | High power factor converter (FR-HC2) | Suppresses the power supply harmonics significantly.<br>Install this as required. | 2-84 |

***Tab. 2-1:*** *Inverter and peripheral devices (1)*

| Symbol | Name | Overview | Refer to page |
|---|---|---|---|
| ❾ | Power regeneration common converter (FR-CV ①) | Provides a large braking capability. Install this as required. | 2-86 |
| ❿ | Power regeneration converter (MT-RC ②) | | 2-87 |
| ⓫ | Brake unit (FR-BU2, FR-BU ①) | Allows the inverter to provide the optimal regenerative braking capability. Install this as required. | 2-79 |
| ⓬ | Resistor unit (FR-BR ①, MT-BR5 ②) | | |
| ⓭ | USB connection | A USB (Ver. 1.1) cable connects the inverter with a personal computer.<br>A USB memory device enables parameter copies and the trace function. | 2-58 |
| ⓮ | High-duty brake resistor (FR-ABR ③) | Improves the braking capability of the inverter built-in brake.<br>Remove the jumper across the terminals PR and PX to connect this. (7.5K or lower)<br>Always install a thermal relay when using a brake resistor whose capacity is 11K or higher. | 2-76 |
| ⓯ | Noise filter (ferrite core) (FR-BSF01, FR-BLF) | Install this to reduce the electromagnetic noise generated from the inverter. The noise filter is effective in the range from about 0.5 MHz to 5 MHz.<br>A wire should be wound four turns at maximum. | 3-6 |
| ⓰ | Induction motor | Connect a squirrel-cage induction motor. | — |
| ⓱ | Contactor<br>Example:<br>No-fuse switch (DSN type) | Connect this for an application where a PM motor is driven by the load even while the inverter power is OFF. Do not open or close the contactor while the inverter is running (outputting). | — |
| ⓲ | IPM motor (MM-CF) | Use the specified motor. An IPM motor cannot be driven by the commercial power supply. | 8-8 |

***Tab. 2-1:*** *Inverter and peripheral devices (2)*

① Compatible with the FR-A820-03160(55K) or lower and FR-A840-01800(55K) or lower.

② Compatible with the FR-A820-03800(75K) or higher and FR-A840-02160(75K) or higher.

③ Compatible with the FR-A820-01250(22K) or lower and FR-A840-00620(22K) or lower.

## 2.1.2 Peripheral devices

Check the model of the inverter you purchased. Appropriate peripheral devices must be selected according to the capacity.

Refer to the table below to prepare appropriate peripheral devices.

**200 V class**

| Motor output [kW] ① | Applicable inverter model | Molded case circuit breaker (MCCB) ② or Earth leakage circuit breaker (ELB) (NF, NV type) | | Input-side magnetic contactor ③ | |
|---|---|---|---|---|---|
| | | Power factor improving (AC or DC) reactor | | Power factor improving (AC or DC) reactor | |
| | | Without | With | Without | With |
| 0.4 | FR-A820-00046(0.4K) | 5A | 5A | S-T10 | S-T10 |
| 0.75 | FR-A820-00077(0.75K) | 10A | 10A | S-T10 | S-T10 |
| 1.5 | FR-A820-00105(1.5K) | 15A | 15A | S-T10 | S-T10 |
| 2.2 | FR-A820-00167(2.2K) | 20A | 15A | S-T10 | S-T10 |
| 3.7 | FR-A820-00250(3.7K) | 30A | 30A | S-T21 | S-T10 |
| 5.5 | FR-A820-00340(5.5K) | 50A | 40A | S-N25 | S-T21 |
| 7.5 | FR-A820-00490(7.5K) | 60A | 50A | S-N25 | S-N25 |
| 11 | FR-A820-00630(11K) | 75A | 75A | S-N35 | S-N35 |
| 15 | FR-A820-00770(15K) | 125A | 100A | S-N50 | S-N50 |
| 18.5 | FR-A820-00930(18.5K) | 150A | 125A | S-N65 | S-N50 |
| 22 | FR-A820-01250(22K) | 175A | 150A | S-N80 | S-N65 |
| 30 | FR-A820-01540(30K) | 225A | 175A | S-N95 | S-N80 |
| 37 | FR-A820-01870(37K) | 250A | 225A | S-N150 | S-N125 |
| 45 | FR-A820-02330(45K) | 300A | 300A | S-N180 | S-N150 |
| 55 | FR-A820-03160(55K) | 400A | 350A | S-N220 | S-N180 |
| 75 | FR-A820-03800(75K) | — | 400A | — | S-N300 |
| 90 | FR-A820-04750(90K) | — | 400A | — | S-N300 |

***Tab. 2-2:*** *Breakers and contactors (200 V class)*

① Assumes the use of an IPM motor MM-CF or a Mitsubishi 4-pole standard motor with the power supply voltage of 200 V AC 50 Hz.

② Select an MCCB according to the power supply capacity.
Install one MCCB per inverter.
For the use in the United States or Canada, provide the appropriate UL and cUL listed fuse or UL489 molded case circuit breaker (MCCB) that is suitable for branch circuit protection. (Refer to the Installation Guideline.)

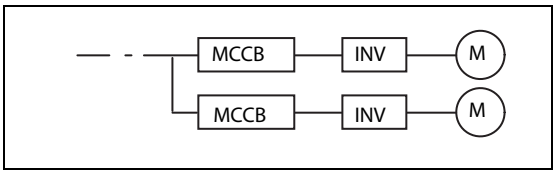


***Fig. 2-2:***
*Installation of the breakers*

I002770E

③ The magnetic contactor is selected based on the AC-1 class. The electrical durability of magnetic contactor is 500,000 times. When the magnetic contactor is used for emergency stops during motor driving, the electrical durability is 25 times.
If using an MC for emergency stop during motor driving, select an MC regarding the inverter input side current as JEM1038-AC-3 class rated current. When using an MC on the inverter output side for commercial-power supply operation switching using a general-purpose motor, select an MC regarding the rated motor current as JEM1038-AC-3 class rated current.

**NOTES**

When the inverter capacity is larger than the motor capacity, select an MCCB and a magnetic contactor according to the inverter model, and select cables and reactors according to the motor output.

When the breaker on the inverter's input side trips, check for the wiring fault (short circuit), damage to internal parts of the inverter etc. The cause of the trip must be identified and removed before turning ON the power of the breaker.

### 400 V class

| Motor output [kW] ① | Applicable inverter model | Molded case circuit breaker (MCCB) ② or earth leakage circuit breaker (ELB) (NF, NV type) | | Input-side magnetic contactor ③ | |
|---|---|---|---|---|---|
| | | Power factor improving (AC or DC) reactor | | Power factor improving (AC or DC) reactor | |
| | | Without | With | Without | With |
| 0.4 | FR-A840-00023(0.4K) | 5A | 5A | S-T10 | S-T10 |
| 0.75 | FR-A840-00038(0.75K) | 5A | 5A | S-T10 | S-T10 |
| 1.5 | FR-A840-00052(1.5K) | 10A | 10A | S-T10 | S-T10 |
| 2.2 | FR-A840-00083(2.2K) | 10A | 10A | S-T10 | S-T10 |
| 3.7 | FR-A840-00126(3.7K) | 20A | 15A | S-T10 | S-T10 |
| 5.5 | FR-A840-00170(5.5K) | 30A | 20A | S-T21 | S-T12 |
| 7.5 | FR-A840-00250(7.5K) | 30A | 30A | S-T21 | S-NT21 |
| 11 | FR-A840-00310(11K) | 50A | 40A | S-T21 | S-T21 |
| 15 | FR-A840-00380(15K) | 60A | 50A | S-N25 | S-T21 |
| 18.5 | FR-A840-00470(18.5K) | 75A | 60A | S-N25 | S-N25 |
| 22 | FR-A840-00620(22K) | 100A | 75A | S-N35 | S-N25 |
| 30 | FR-A840-00770(30K) | 125A | 100A | S-N50 | S-N50 |
| 37 | FR-A840-00930(37K) | 150A | 125A | S-N65 | S-N50 |
| 45 | FR-A840-01160(45K) | 175A | 150A | S-N80 | S-N65 |
| 55 | FR-A840-01800(55K) | 200A | 175A | S-N80 | S-N80 |
| 75 | FR-A840-02160(75K) | — | 225A | — | S-N95 |
| 90 | FR-A840-02600(90K) | — | 225A | — | S-N150 |
| 110 | FR-A840-03250(110K) | — | 225A | — | S-N180 |
| 132 | FR-A840-03610(132K) | — | 400A | — | S-N220 |
| 160 | FR-A840-04320(160K) | — | 400A | — | S-N300 |
| 185 | FR-A840-04810(185K) | — | 400A | — | S-N300 |
| 220 | FR-A840-05470(220K) | — | 500A | — | S-N400 |
| 250 | FR-A840-06100(250K) | — | 600A | — | S-N600 |
| 280 | FR-A840-06830(280K) | — | 600A | — | S-N600 |

***Tab. 2-3:*** *Breakers and contactors (400 V class)*

① Assumes the use of an IPM motor MM-CF or a Mitsubishi 4-pole standard motor with the power supply voltage of 400 V AC 50 Hz.

② Select an MCCB according to the power supply capacity.
Install one MCCB per inverter.
For the use in the United States or Canada, provide the appropriate UL and cUL listed fuse or UL489 molded case circuit breaker (MCCB) that is suitable for branch circuit protection. (Refer to the Installation Guideline.)

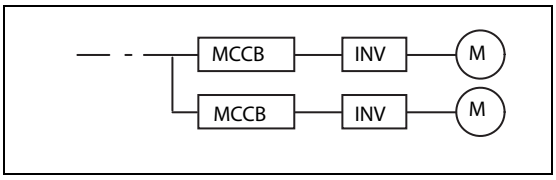


***Fig. 2-3:***
*Installation of the breakers*

I002770E

③ Magnetic contactor is selected based on the AC-1 class. The electrical durability of magnetic contactor is 500,000 times. When the magnetic contactor is used for emergency stops during motor driving, the electrical durability is 25 times.
If using an MC for emergency stop during motor driving, select an MC regarding the inverter input side current as JEM1038-AC-3 class rated current. When using an MC on the inverter output side for commercial-power supply operation switching using a general-purpose motor, select an MC regarding the rated motor current as JEM1038-AC-3 class rated current.

**NOTES**

When the inverter capacity is larger than the motor capacity, select an MCCB and a magnetic contactor according to the inverter model, and select cables and reactors according to the motor output.

When the breaker on the inverter's input side trips, check for the wiring fault (short circuit), damage to internal parts of the inverter etc. The cause of the trip must be identified and removed before turning ON the power of the breaker.

## 2.2 Removal and reinstallation of the front cover

**Removal and reinstallation of the operation panel**

① Loosen the two screws on the operation panel. (These screws cannot be removed.)

② Press the upper edge of the operation panel while pulling out the operation panel.

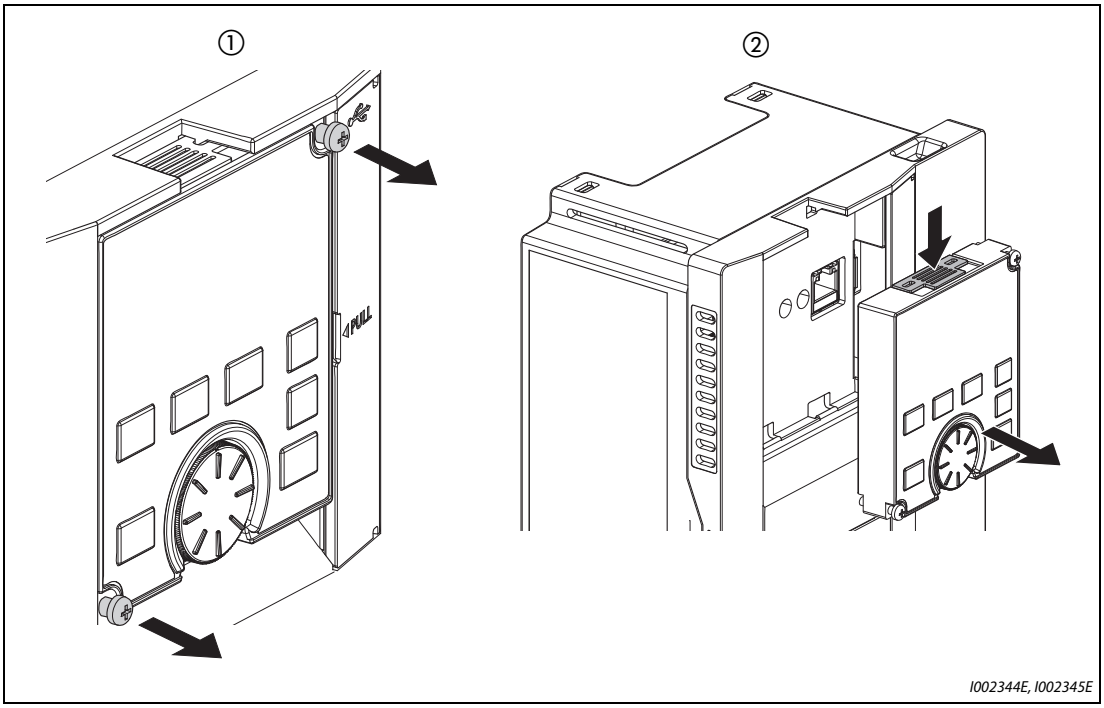


***Fig. 2-4:*** *Removal and reinstallation of the operation panel*

To reinstall the operation panel, align its connector on the back with the PU connector of the inverter, and insert the operation panel. After confirming that the operation panel is fit securely, tighten the screws. (Tightening torque: 0.40 to 0.45 Nm)

**Removal of the terminal block cover**
**(FR-A820-01540(30K) or lower, FR-A840-00770(30K) or lower)**

① Loosen the screws on the terminal block cover. (These screws cannot be removed.)

② Holding the areas around the installation hooks on the sides of the terminal block cover, pull out the terminal block cover using its upper side as a support.

③ With the terminal block cover removed, wiring of the main circuit terminals and control circuit terminals can be performed.

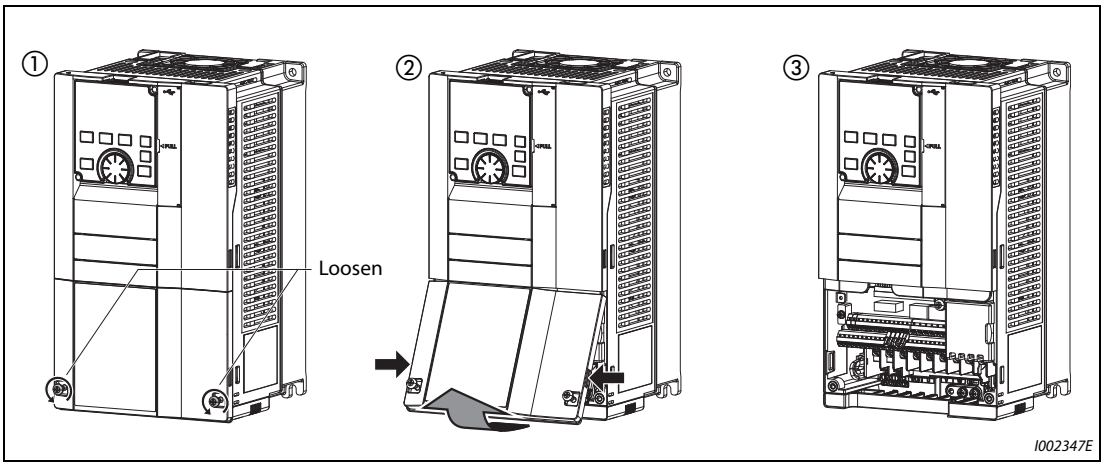


***Fig. 2-5:*** *Removal of the terminal block cover*

**Removal of the front cover (FR-A820-01540(30K) or lower, FR-A840-00770(30K) or lower)**

① With the terminal block cover removed, loosen the mounting screw(s) on the front cover.(The screw(s) cannot be removed.)
(FR-A820-00340(5.5K) to FR-A820-01540(30K) and FR-A840-00170(5.5K) to FR-A840-00770(30K) have two mounting screws.)

② Holding the areas around the installation hooks on the sides of the front cover, pull out the cover using its upper side as a support.

③ With the front cover removed, wiring of the RS-485 terminals and installation of the plug-in option can be performed.

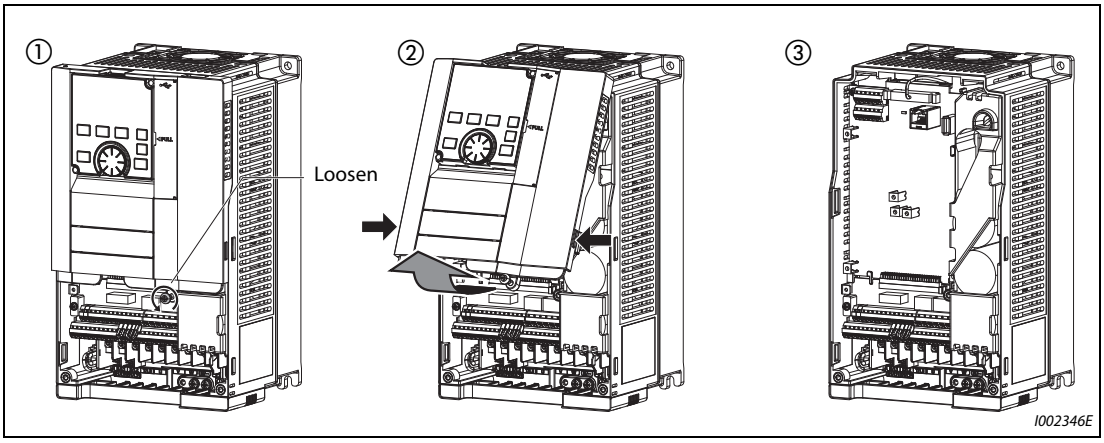


***Fig. 2-6:*** *Removal of the front cover*

**Reinstallation of the front cover and the terminal block cover (FR-A820-01540(30K) or lower, FR-A840-00770(30K) or lower)**

① Insert the upper hooks of the front cover into the sockets of the inverter.
Securely install the front cover to the inverter by fixing the hooks on the sides of the cover into place.

② Tighten the mounting screw(s) at the lower part of the front cover.
(FR-A820-00340(5.5K) to FR-A820-01540(30K) and FR-A840-00170(5.5K) to FR-A840-00770(30K) have two mounting screws.)

③ Install the terminal block cover by inserting the upper hook into the socket of the front cover.

④ Tighten the mounting screws at the lower part of the terminal block cover.

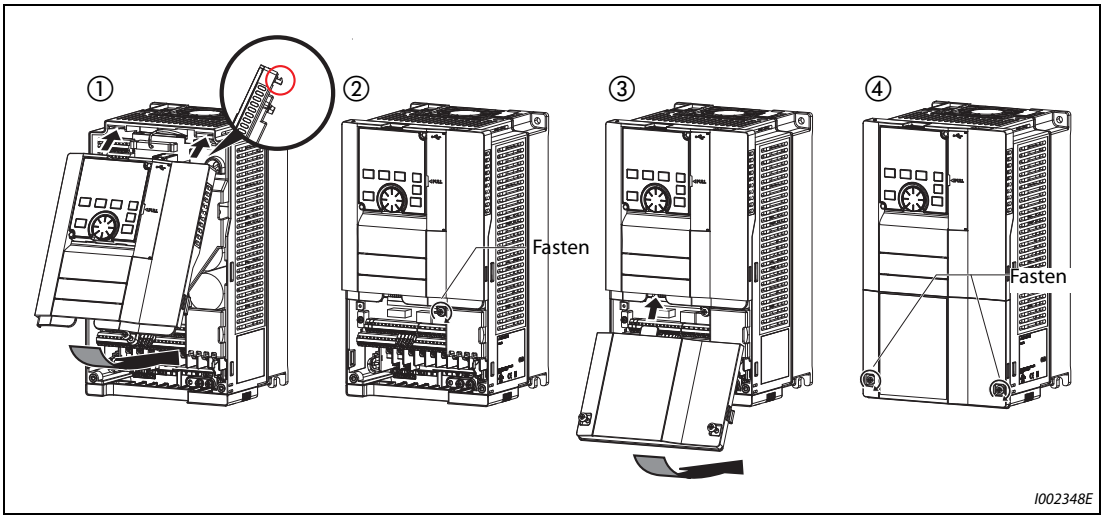


***Fig. 2-7:*** *Reinstallation of the front cover and the terminal block cover*

**NOTE**

When installing the front cover, fit the connector of the operation panel securely along the guides of the PU connector.

**Removal of the terminal block cover**
**(FR-A820-01870(37K) or higher, FR-A840-00930(37K) or higher)**

① When the mounting screws are removed, the terminal block cover can be removed.

② With the terminal block cover removed, wiring of the main circuit terminals can be performed.

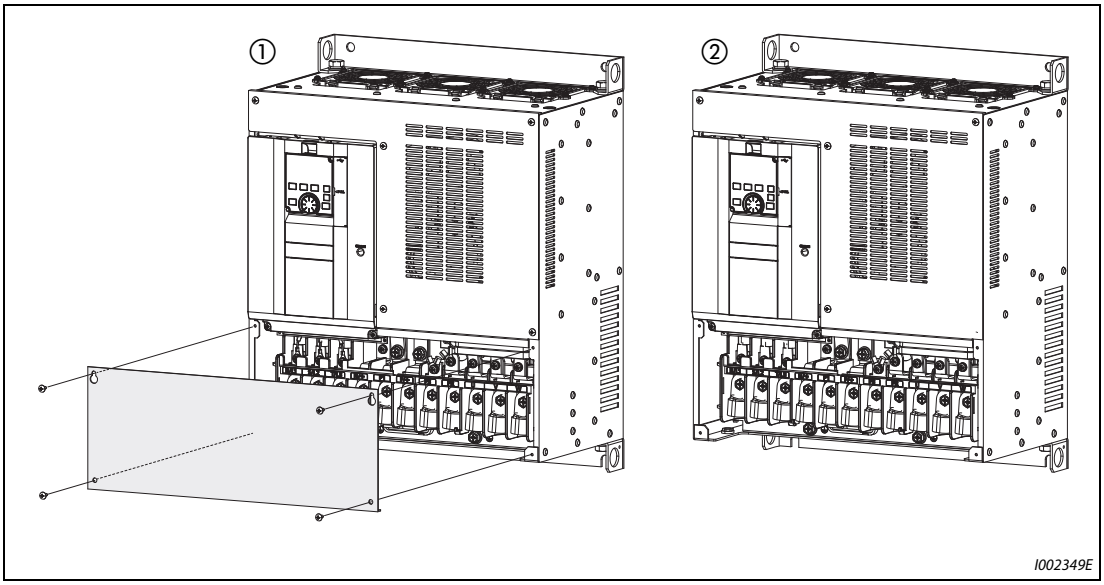


***Fig. 2-8:*** *Removal of the terminal block cover*

**Removal of the front cover (FR-A820-01870(37K) or higher, FR-A840-00930(37K) or higher)**

① With the terminal block cover removed, loosen the mounting screws on the front cover. (These screws cannot be removed.)

② Holding the areas around the installation hooks on the sides of the front cover, pull out the cover using its upper side as a support.

③ With the front cover removed, wiring of the RS-485 terminals and installation of the plug-in option can be performed.

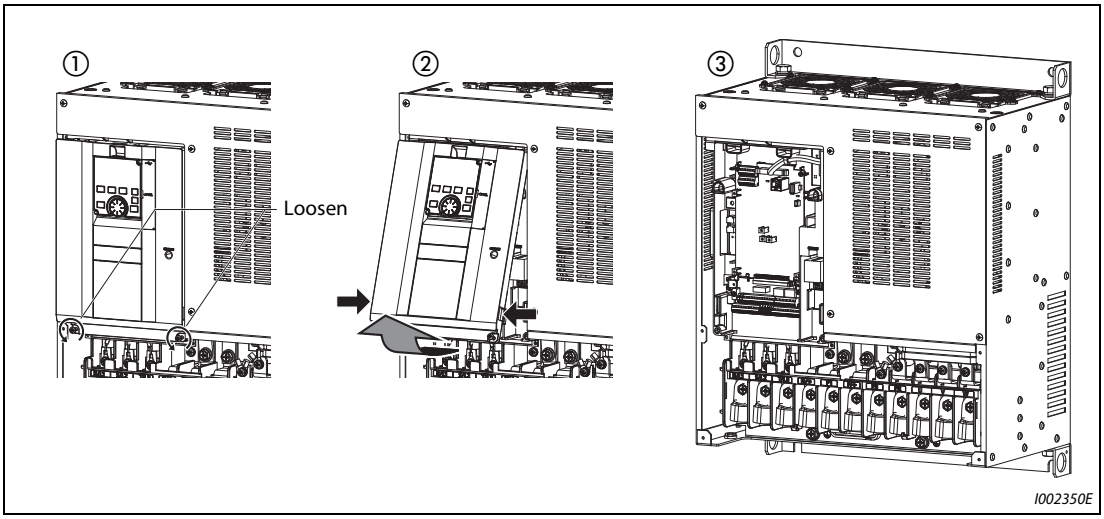


***Fig. 2-9:*** *Removal of the front cover*

**Reinstallation of the front cover and the terminal block cover (FR-A820-01870(37K) or higher, FR-A840-00930(37K) or higher)**

① Insert the upper hooks of the front cover into the sockets of the inverter.
Securely install the front cover to the inverter by fixing the hooks on the sides of the cover into place.

② Tighten the mounting screw(s) at the lower part of the front cover.

③ Fasten the terminal block cover with the mounting screws.

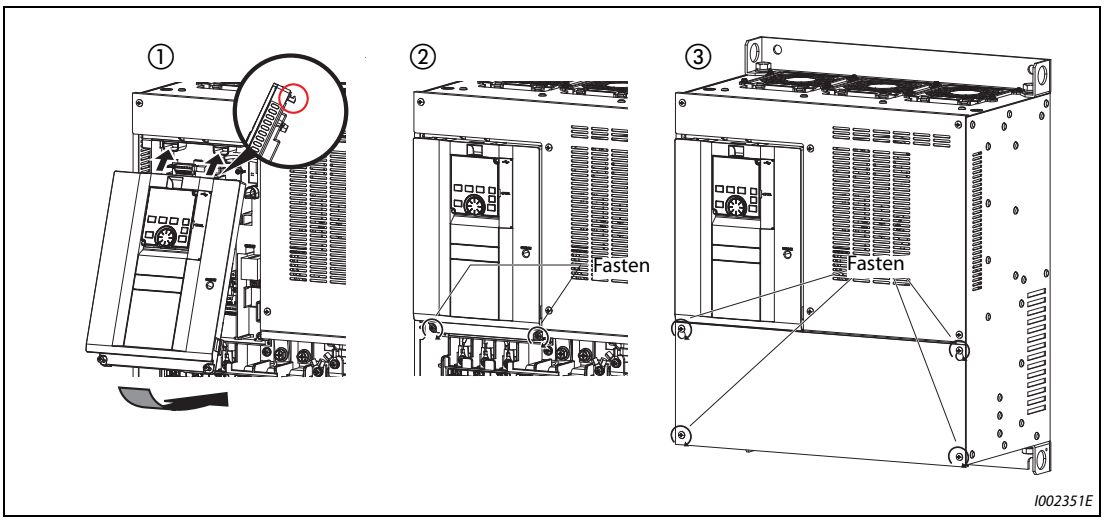


***Fig. 2-10:*** *Reinstallation of the front cover and the terminal block cover*

**NOTES**

Fully make sure that the front cover, and the terminal block cover are installed securely. Always tighten the mounting screws of the front cover, and the terminal block cover.

The same serial number is printed on the capacity plate of the front cover and the rating plate of the inverter. Before reinstalling each cover, check the serial numbers to ensure that the cover removed is reinstalled to the inverter from where it was removed.

# 2.3 Installation of the inverter and enclosure design

When designing or manufacturing an inverter enclosure, determine its structure, size, and device layout by fully considering the conditions such as heat generation of the contained devices and the operating environment. An inverter unit uses many semiconductor devices. To ensure higher reliability and long period of operation, operate the inverter in the ambient environment that completely satisfies the equipment specifications.

## 2.3.1 Inverter installation environment

The following table lists the standard specifications of the inverter installation environment. Using the inverter in an environment that does not satisfy the conditions deteriorates the performance, shortens the life, and causes a failure. Refer to the following points, and take adequate measures.

**Standard environmental specifications of the inverter**

| Item | | Description | |
|---|---|---|---|
| Surrounding air temperature | LD, ND (initial setting), HD | –10 to +50 °C (non-freezing) | 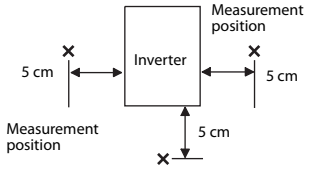 |
| | SLD | –10 to +40 °C (non-freezing) | |
| Ambient humidity | | With circuit board coating, IP55 compatible models:<br>95% RH or less (non-condensing)<br>Without circuit board coating: 90% RH or less (non-condensing) | |
| Storage temperature | | -20 to +65 °C ① | |
| Atmosphere | | Indoors (free from corrosive gas, flammable gas, oil mist, dust and dirt) | |
| Altitude | | Maximum 1,000 m above sea level. ② | |
| Vibration | | 5.9 m/s$^2$ or less ③ at 10 to 55 Hz (directions of X, Y, Z axes) | |

***Tab. 2-4:*** *Environmental standard specifications of inverter*

① Temperature applicable for a short time, e.g. in transit.

② For the installation at an altitude above 1,000 m up to 2,500 m, derate the rated current 3% per 500 m.

③ 2.9 m/s$^2$ or less for the FR-A840-04320(160K) or higher.

**Temperature**

The permissible surrounding air temperature of the inverter is between –10 °C and +50 °C (–10 °C and +40 °C at the SLD rating). Always operate the inverter within this temperature range. Operation outside this range will considerably shorten the service lives of the semiconductors, parts, capacitors and others. Take the following measures to keep the surrounding air temperature of the inverter within the specified range.

- Measures against high temperature
  - Use a forced ventilation system or similar cooling system. (Refer to page 2-15.)
  - Install the enclosure in an air-conditioned electric chamber.
  - Block direct sunlight.
  - Provide a shield or similar plate to avoid direct exposure to the radiated heat and wind of a heat source.
  - Ventilate the area around the enclosure well.

- Measures against low temperature
  - Provide a space heater in the enclosure.
  - Do not power OFF the inverter. (Keep the start signal of the inverter OFF.)
- Sudden temperature changes
  - Select an installation place where temperature does not change suddenly.
  - Avoid installing the inverter near the air outlet of an air conditioner.
  - If temperature changes are caused by opening/closing of a door, install the inverter away from the door.

**Humidity**

Operate the inverter within the ambient air humidity of usually 45 to 90% (up to 95% with circuit board coating). Too high humidity will pose problems of reduced insulation and metal corrosion. On the other hand, too low humidity may cause a spatial electrical breakdown.
The insulation distance defined in JEM1103 "Control Equipment Insulator" is humidity of 45 to 85%.

- Measures against high humidity
  - Make the enclosure enclosed, and provide it with a hygroscopic agent.
  - Provide dry air into the enclosure from outside.
  - Provide a space heater in the enclosure.
- Measures against low humidity
  Air with proper humidity can be blown into the enclosure from outside. Also when installing or inspecting the unit, discharge your body (static electricity) beforehand, and keep your body away from the parts and patterns.
- Measures against condensation
  Condensation may occur if frequent operation stops change the in-enclosure temperature suddenly or if the outside air temperature changes suddenly.
  Condensation causes such faults as reduced insulation and corrosion.
  - Take the measures against high humidity.
  - Do not power OFF the inverter. (Keep the start signal of the inverter OFF.)

**Dust, dirt, oil mist**

Dust and dirt will cause such faults as poor contacts, reduced insulation and cooling effect due to the moisture-absorbed accumulated dust and dirt, and in-enclosure temperature rise due to a clogged filter. In an atmosphere where conductive powder floats, dust and dirt will cause such faults as malfunction, deteriorated insulation and short circuit in a short time.

Since oil mist will cause similar conditions, it is necessary to take adequate measures.

- Countermeasure
  - Place the inverter in a totally enclosed enclosure.
    Take measures if the in-enclosure temperature rises. (Refer to page 2-15.)
  - Purge air.
    Pump clean air from outside to make the in-enclosure air pressure higher than the outside air pressure.

**Corrosive gas, salt damage**

If the inverter is exposed to corrosive gas or to salt near a beach, the printed board patterns and parts will corrode or the relays and switches will result in poor contact.

In such places, take the measures given in "Dust, dirt, oil mist".

**Explosive, flammable gases**

As the inverter is non-explosion proof, it must be contained in an explosion-proof enclosure. In places where explosion may be caused by explosive gas, dust or dirt, an enclosure cannot be used unless it structurally complies with the guidelines and has passed the specified tests. This makes the enclosure itself expensive (including the test charges). The best way is to avoid installation in such places and install the inverter in a non-hazardous place.

**High altitude**

Use the inverter at an altitude of within 1000 m. For the installation at an altitude above 1,000 m up to 2,500 m, derate the rated current 3% per 500 m.
If it is used at a higher place, it is likely that thin air will reduce the cooling effect and low air pressure will deteriorate dielectric strength.

**Vibration, impact**

The vibration resistance of the inverter is up to 5.9 $m/s^2$ (2.9 $m/s^2$ or less for the FR-A840-04320(160K) or higher) at 10 to 55 Hz frequency and 1 mm amplitude for the directions of X, Y, Z axes. Applying vibration and impact for a long time may loosen the structures and cause poor contacts of connectors, even if those vibration and impacts are within the specified values.

Especially when impacts are applied repeatedly, caution must be taken because such impacts may break the installation feet.

- Countermeasure
  - Provide the enclosure with rubber vibration isolators.
  - Strengthen the structure to prevent the enclosure from resonance.
  - Install the enclosure away from the sources of the vibration.

## 2.3.2 Cooling system types for inverter enclosure

From the enclosure that contains the inverter, the heat of the inverter and other equipment (transformers, lamps, resistors, etc.) and the incoming heat such as direct sunlight must be dissipated to keep the in-enclosure temperature lower than the permissible temperatures of the in-enclosure equipment including the inverter.

The cooling systems are classified as follows in terms of the cooling calculation method.

- Cooling by natural heat dissipation from the enclosure surface (totally enclosed type)
- Cooling by heatsink (aluminum fin, etc.)
- Cooling by ventilation (forced ventilation type, pipe ventilation type)
- Cooling by heat exchanger or cooler (heat pipe, cooler, etc.)

| Cooling system | | Enclosure structure | Comment |
|---|---|---|---|
| Natural cooling | Natural ventilation (enclosed, open type) | 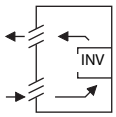  I001000E | This system is low in cost and generally used, but the enclosure size increases as the inverter capacity increases. This system is for relatively small capacities. |
| | Natural ventilation (totally enclosed type) | 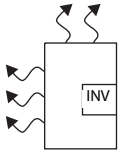  I001001E | Being a totally enclosed type, this system is the most appropriate for hostile environment having dust, dirt, oil mist, etc. The enclosure size increases depending on the inverter capacity. |
| Forced cooling | Heatsink cooling | 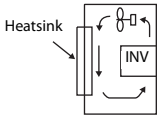  I001002E | This system has restrictions on the heatsink mounting position and area. This system is for relatively small capacities. |
| | Forced ventilation | 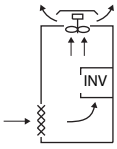  I001003E | This system is for general indoor installation. This is appropriate for enclosure downsizing and cost reduction, and often used. |
| | Heat pipe | 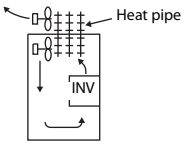  I001004E | This is a totally enclosed for enclosure downsizing. |

***Tab. 2-5:*** *Cooling system types for inverter enclosure*

## 2.3.3 Inverter installation

### Inverter placement

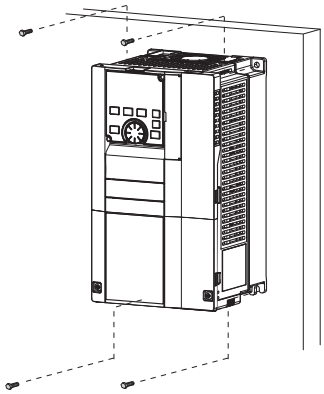

Fix six positions for the FR-A840-04320(160K) or higher.

I002353E

***Fig. 2-11:***
*Installation on the panel*

- Install the inverter on a strong surface securely with screws.
- Leave enough clearances and take cooling measures.
- Avoid places where the inverter is subjected to direct sunlight, high temperature and high humidity.
- Install the inverter on a nonflammable wall surface.
- When encasing multiple inverters, install them in parallel as a cooling measure.

- For heat dissipation and maintenance, keep clearance between the inverter and the other devices or enclosure surface. The clearance below the inverter is required as a wiring space, and the clearance above the inverter is required as a heat dissipation space.

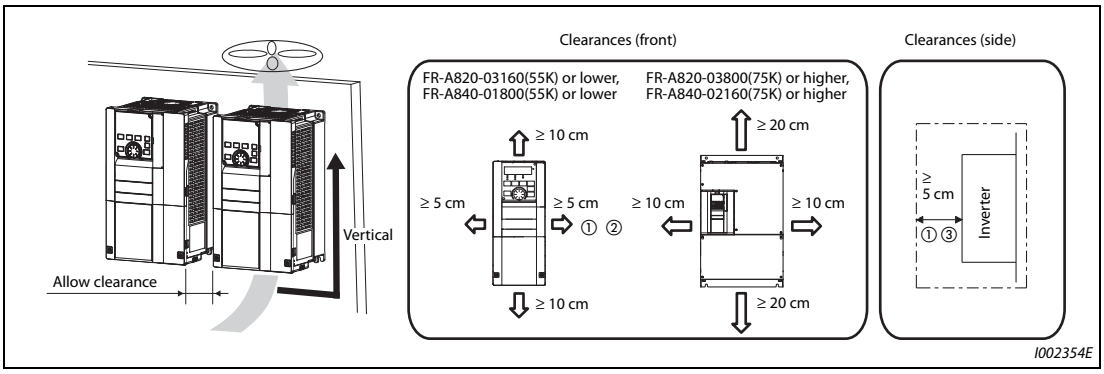


***Fig. 2-12:*** *Clearances*

① For the FR-A820-00250(3.7K) or lower and FR-A840-00126(3.7K) or lower, allow 1 cm or more clearance.

② When using the FR-A820-01250(22K) or lower and FR-A840-00620(22K) or lower at the surrounding air temperature of 40 °C or less (30 °C or less for the SLD rated inverter), side-by-side installation (0 cm clearance) is available.

③ For replacing the cooling fan of the FR-A840-04320(160K) or higher, 30 cm of space is necessary in front of the inverter. Refer to page 7-7 for fan replacement.

**Installation orientation of the inverter**

Install the inverter on a wall as specified. Do not mount it horizontally or any other way.

**Above the inverter**

Heat is blown up from inside the inverter by the small fan built in the unit. Any equipment placed above the inverter should be heat resistant.

### Arrangement of multiple inverters

When multiple inverters are placed in the same enclosure, generally arrange them horizontally as shown in the fig. 2-13 (a). When it is inevitable to arrange them vertically to minimize space, take such measures as to provide guides since heat from the bottom inverters can increase the temperatures in the top inverters, causing inverter failures.

When mounting multiple inverters, fully take caution not to make the surrounding air temperature of the inverter higher than the permissible value by providing ventilation and increasing the enclosure size.

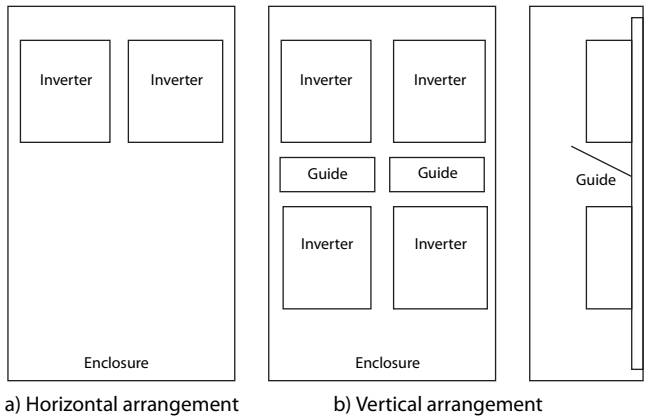


***Fig. 2-13:*** *Arrangement of multiple inverters*

### Arrangement of the ventilation fan and inverter

Heat generated in the inverter is blown up from the bottom of the unit as warm air by the cooling fan. When installing a ventilation fan for that heat, determine the place of ventilation fan installation after fully considering an air flow. (Air passes through areas of low resistance. Make an airway and airflow plates to expose the inverter to cool air.)

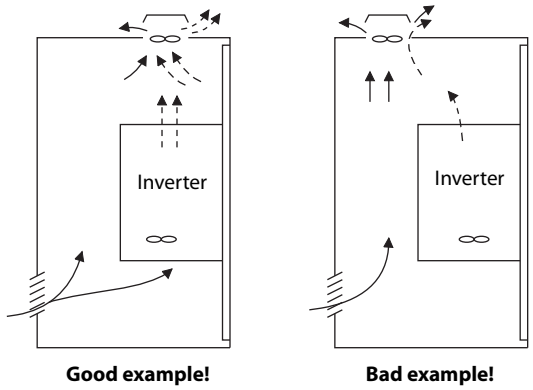


***Fig. 2-14:*** *Arrangement of the ventilation fan and inverter*

## 2.3.4 Heatsink protrusion attachment procedure

When encasing FR-A840-04320(160K) or higher to an enclosure, the heat generated in the enclosure can be greatly reduced by protruding the heatsink of the inverter.

When installing the inverter in a compact enclosure, etc., this installation method is recommended.

### Panel cutting

Cut the panel of the enclosure according to the inverter capacity.

| FR-A840-04320(160K), FR-A840-04810(185K) | FR-A840-05470(220K) FR-A840-06100(250K) FR-A840-06830(280K) |
|---|---|
| 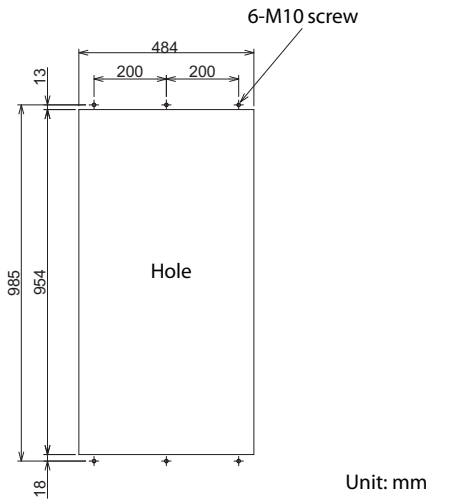  | 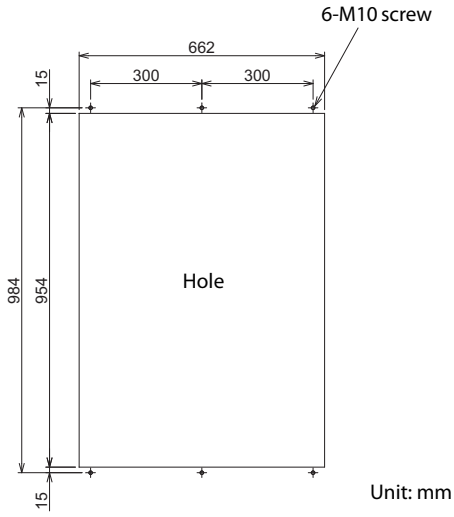  |

***Tab. 2-6:*** *Dimensions of the cut-out for the heatsink protrusion*

### Shift and removal of a rear side installation frame

One installation frame is attached to each of the upper and lower parts of the inverter. Change the position of the rear side installation frame on the upper and lower sides of the inverter to the front side as shown on the right. When changing the installation frames, make sure that the installation orientation is correct.

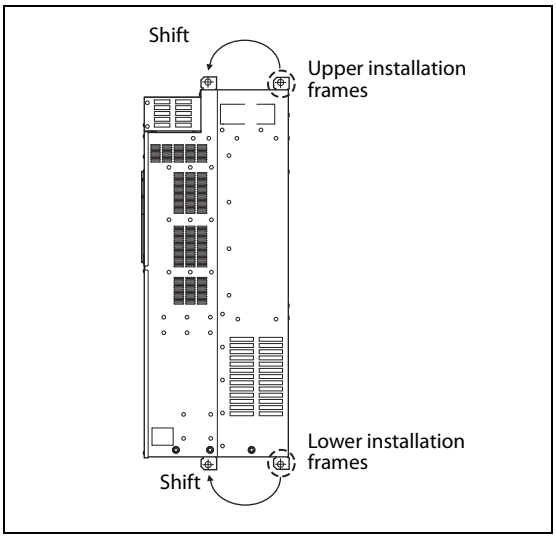


***Fig. 2-15:***
*Shift and removal of a rear side installation frame*

### Installation of the inverter

Push the inverter heatsink portion outside the enclosure and fix the enclosure and inverter with upper and lower installation frame.

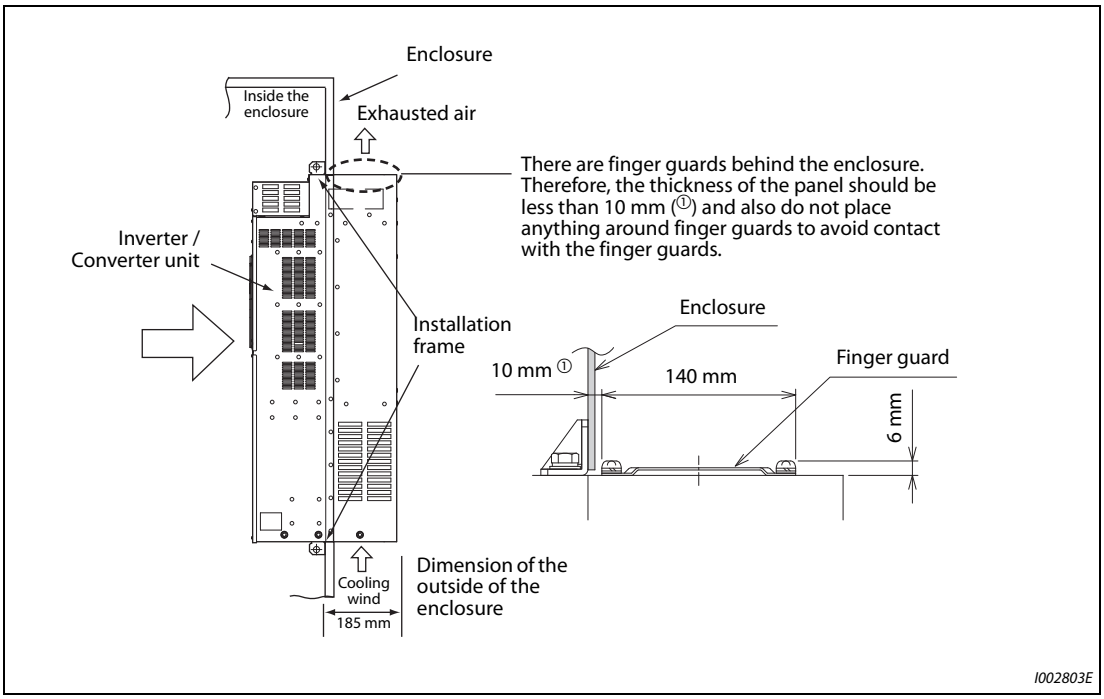


***Fig. 2-16:*** *Installation on the control cabinet wall*

**NOTES**

Having a cooling fan, the cooling section which comes out of the enclosure cannot be used in the environment of water drops, oil, mist, dust, etc.

Be careful not to drop screws, dust etc. into the inverter and cooling fan section.

# 2.4 Terminal connection diagrams

## 2.4.1 FM type

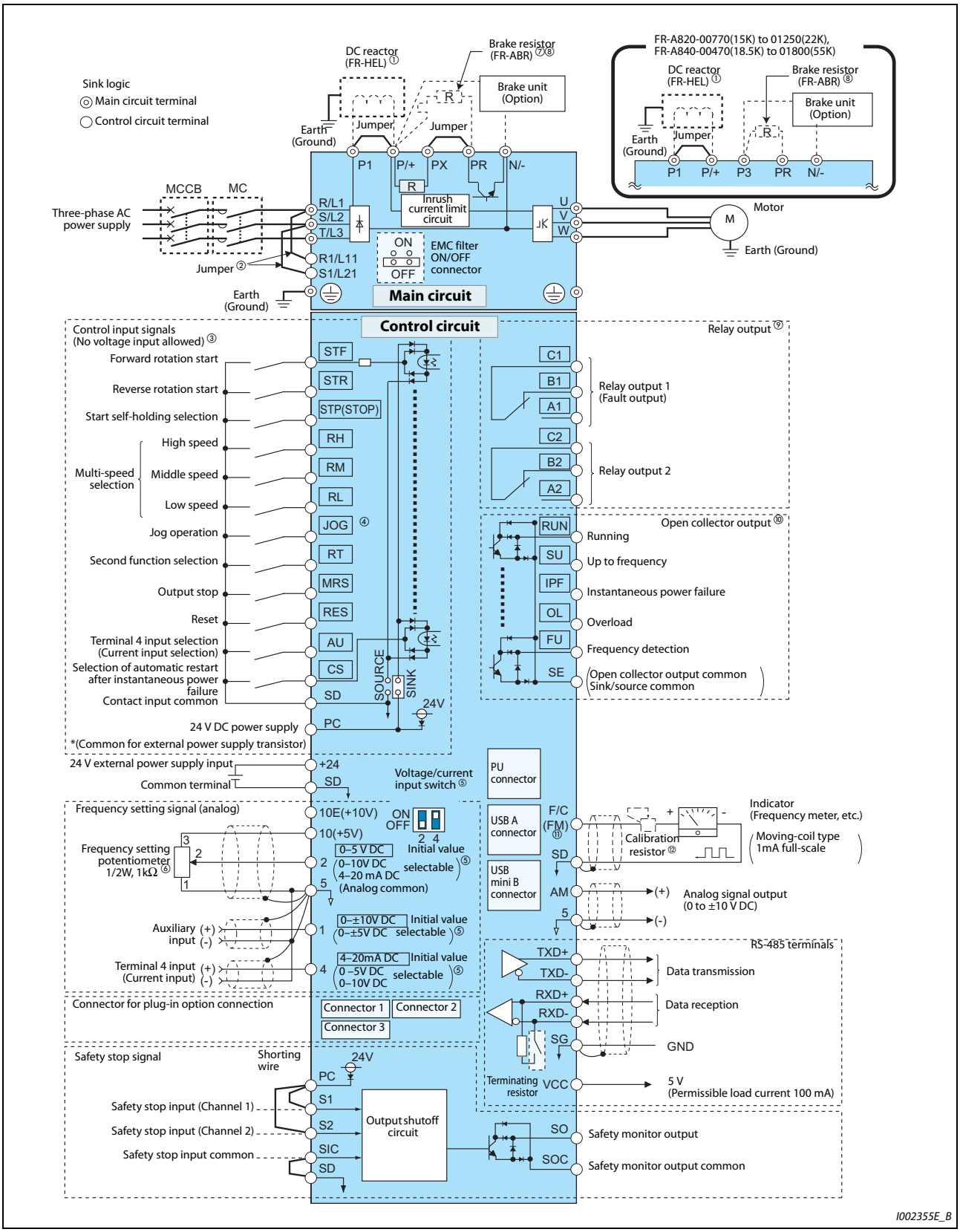


***Fig. 2-17:*** *Terminal connection diagram of the inverter (FM type)*

① For the FR-A820-03800(75K) or higher, the FR-A840-02160(75K) or higher, or when using a motor with a capacity of 75 kW or higher, always connect a DC reactor (FR-HEL), which is available as an option. (To select a DC reactor, refer to page 8-1, and select one according to the applicable motor capacity.)
When a DC reactor is connected to the FR-A820-03160(55K) or lower or the FR-A840-01800(55K) or lower, if a jumper is installed across the terminals P1 and P/+, remove the jumper before installing the DC reactor.

② When using separate power supply for the control circuit, remove the jumper between R1/L11 and S1/L21.

③ The function of these terminals can be changed with the input terminal assignment (Pr. 178 to Pr. 189). (Refer to page 5-409.)

④ Terminal JOG is also used as a pulse train input terminal. Use Pr. 291 to choose JOG or pulse.

⑤ Terminal input specifications can be changed by analog input specification switchover (Pr. 73, Pr. 267). To input a voltage (0 to 5 V/0 to 10 V), set the voltage/current input switch OFF. To input a current (4 to 20 mA), set the voltage/current input switch ON. (Refer to page 5-376.)

⑥ It is recommended to use 2 W, 1 kΩ when the frequency setting signal is changed frequently.

⑦ Remove the jumper between PR and PX to connect the brake resistor. (FR-A820-00490(7.5K) or lower and FR-A840-00250(7.5K) or lower).

⑧ The terminal PR is equipped in the FR-A820-01250(22K) or lower and FR-A840-01800(55K) or lower. Install a thermal relay to prevent overheating and damage of discharging resistors. (Refer to page 2-76.)

⑨ The function of these terminals can be changed with the output terminal assignment (Pr. 195, Pr. 196). (Refer to page 5-350.)

⑩ The function of these terminals can be changed with the output terminal assignment (Pr. 190 to Pr. 194). (Refer to page 5-350.)

⑪ The terminal FM can be used to output pulse trains as open collector output by setting Pr. 291.

⑫ Not required when calibrating the scale with the operation panel.

**NOTES**

To prevent a malfunction due to noise, keep the signal cables 10 cm or more away from the power cables. Also, separate the main circuit cables at the input side from the main circuit cables at the output side.

After wiring, wire offcuts must not be left in the inverter.
Wire offcuts can cause an alarm, failure or malfunction. Always keep the inverter clean.
When drilling mounting holes in an enclosure etc., take caution not to allow chips and other foreign matter to enter the inverter.

Set the voltage/current input switch correctly. Incorrect setting may cause a fault, failure or malfunction.

## 2.4.2 CA type

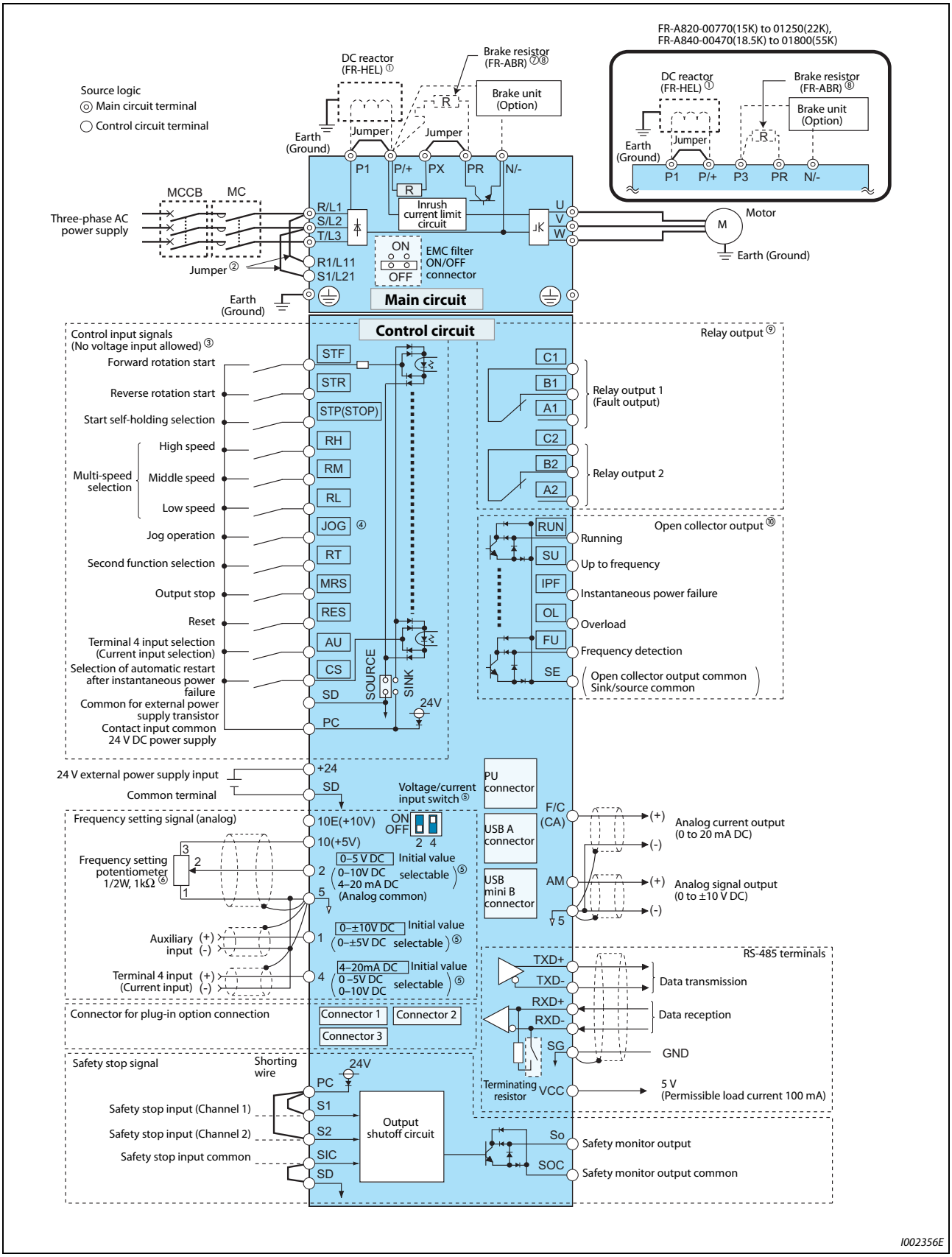


***Fig. 2-18:*** *Terminal connection diagram of the inverter (CA type)*

① For the FR-A820-03800(75K) or higher, the FR-A840-02160(75K) or higher, or when using a motor with a capacity of 75 kW or higher, always connect a DC reactor (FR-HEL), which is available as an option. (To select a DC reactor, refer to page 8-1, and select one according to the applicable motor capacity.)
When a DC reactor is connected to the FR-A820-03160(55K) or lower or the FR-A840-01800(55K) or lower, if a jumper is installed across the terminals P1 and P/+, remove the jumper before installing the DC reactor.

② When using separate power supply for the control circuit, remove the jumper between R1/L11 and S1/L21.

③ The function of these terminals can be changed with the input terminal assignment (Pr. 178 to Pr. 189). (Refer to page 5-409.)

④ Terminal JOG is also used as a pulse train input terminal. Use Pr. 291 to choose JOG or pulse.

⑤ Terminal input specifications can be changed by analog input specification switchover (Pr. 73, Pr. 267). To input a voltage (0 to 5 V/0 to 10 V), set the voltage/current input switch OFF. To input a current (4 to 20 mA), set the voltage/current input switch ON. (Refer to page 5-376.)

⑥ It is recommended to use 2 W, 1kΩ when the frequency setting signal is changed frequently.

⑦ Remove the jumper between PR and PX to connect the brake resistor. (FR-A820-00490(7.5K) or lower and FR-A840-00250(7.5K) or lower).

⑧ The terminal PR is equipped in the FR-A820-01250(22K) or lower and FR-A840-01800(55K) or lower. Install a thermal relay to prevent overheating and damage of discharging resistors.
(Refer to page 2-76.)

⑨ The function of these terminals can be changed with the output terminal assignment (Pr. 195, Pr. 196). (Refer to page 5-350.)

⑩ The function of these terminals can be changed with the output terminal assignment (Pr. 190 to Pr. 194). (Refer to page 5-350.)

**NOTES**

To prevent a malfunction due to noise, keep the signal cables 10 cm or more away from the power cables. Also, separate the main circuit cables at the input side from the main circuit cables at the output side.

After wiring, wire offcuts must not be left in the inverter.
Wire offcuts can cause an alarm, failure or malfunction. Always keep the inverter clean.
When drilling mounting holes in an enclosure etc., take caution not to allow chips and other foreign matter to enter the inverter.

Set the voltage/current input switch correctly. Incorrect setting may cause a fault, failure or malfunction.

# 2.5 Main circuit terminals

## 2.5.1 Details on the main circuit terminals

| Terminal symbol | Terminal name | Terminal function description | Refer to page |
|---|---|---|---|
| R/L1, S/L2, T/L3 | AC power input | Connect these terminals to the commercial power supply. Do not connect anything to these terminals when using the high power factor converter (FR-HC2) or the power regeneration common converter (FR-CV). | — |
| U, V, W | Inverter output | Connect these terminals to a three-phase squirrel cage motor or a PM motor. | — |
| R1/L11, S1/L21 | Power supply for the control circuit | Connected to the AC power supply terminals R/L1 and S/L2. To retain the fault display and fault output, or to use a high power factor converter (FR-HC2) or a power regeneration common converter (FR-CV), remove the jumpers across terminals R/L1 and R1/L11 and across S/L2 and S1/L21, and supply external power to these terminals.<br>The power capacity necessary when separate power is supplied from R1/L11 and S1/L21 differs according to the inverter capacity.<br>FR-A820-00630(11K) or lower, FR-A840-00380(15K) or lower: 60 VA<br>FR-A820-00770(15K) or higher, FR-A840-00470(18.5K) or higher: 80 VA | 2-48 |
| P/+, PR | Brake resistor connection<br>FR-A820-00630(11K) or lower<br>FR-A840-00380(15K) or lower | Connect an optional brake resistor (FR-ABR) across the terminals P/+ and PR. Remove the jumper across the terminals PR and PX for the inverter capacity that has the terminal PX.<br>Connecting a brake resistor increases the regenerative braking capability. | 2-76 |
| P3, PR | Brake resistor connection<br>FR-A820-00770(15K) to 01250(22K)<br>FR-A840-00470(18.5K) to 01800(55K) | Connect an optional brake resistor across the terminals P3 and PR.<br>Connecting a brake resistor increases the regenerative braking capability. | |
| P/+, N/- | Brake unit connection<br>FR-A820-00630(11K) or lower<br>FR-A840-00380(15K) or lower | Connect the brake unit (FR-BU2, FR-BU, BU), power regeneration common converter (FR-CV), power regeneration converter (MT-RC), high power factor converter (FR-HC2), or DC power supply (under DC feeding mode).<br>When connecting multiple inverters, FR-A820-00770(15K) to 01250(22K) or FR-A840-00470(18.5K) to 01800(55K), in parallel using the FR-CV, FRHC2, or DC power supply, always use either of the terminal P/+ or P3 for the connection. (Do not use the terminals P/+ and P3 together.) | 2-79 |
| P3, N/- | Brake unit connection<br>FR-A820-00770(15K) to 01250(22K)<br>FR-A840-00470(18.5K) to 01800(55K) | | |
| P/+, P1 | DC reactor connection<br>FR-A820-03160(55K) or lower<br>FR-A840-01800(55K) or lower | Remove the jumper across terminals P/+ and P1, and connect a DC reactor.<br>When a DC reactor is not connected, the jumper across terminals P/+ and P1 should not be removed.<br>When using a motor with 75 kW or higher, always connect a DC reactor, which is available as an option. | 2-88 |
| | DC reactor connection<br>FR-A820-03800(75K) or higher<br>FR-A840-02160(75K) or higher | Always connect a DC reactor, which is available as an option. | |
| PR, PX | Built-in brake circuit connection | When the jumper is connected across terminals PX and PR (initial status), the built-in brake circuit is valid.<br>The built-in brake circuit is equipped in the FR-A820-00490(7.5K) or lower and FR-A840-00250(7.5K) or lower. | — |
| ⏚ | Earth (ground) | For earthing (grounding) the inverter chassis. This must be earthed (grounded). | 2-34 |

***Tab. 2-7:*** *Specification of main circuit terminal*

**NOTE** When connecting an optional brake resistor (FR-ABR) or a brake unit (FR-BU2, FR-BU, BU), remove the jumpers across the terminals PR and PX. For the details, refer to page 2-76.

## 2.5.2 Terminal layout of the main circuit terminals, wiring of power supply and the motor

**FR-A820-00046(0.4K), FR-A820-00077(0.75K)**

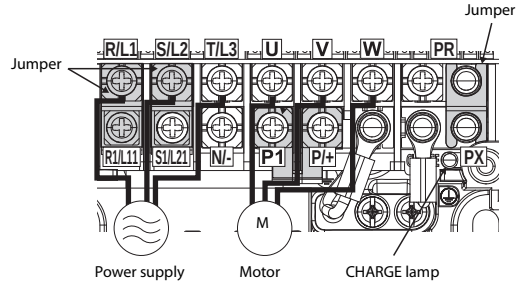


I002357E

**FR-A820-00105(1.5K) to FR-A820-00250(3.7K)**
**FR-A840-00023(0.4K) to FR-A840-00126(3.7K)**

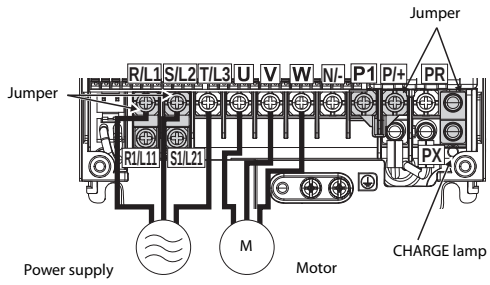


I002358E

**FR-A820-00340(5.5K), FR-A820-00490(7.5K)**
**FR-A840-00170(5.5K), FR-A840-00250(7.5K)**

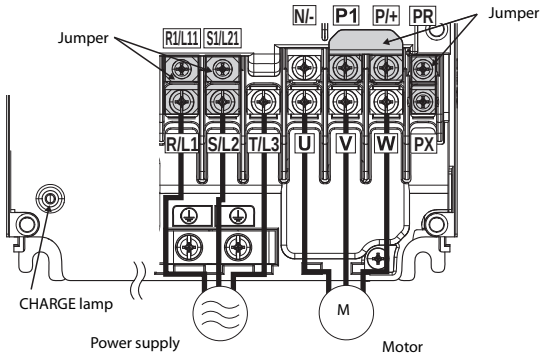


I002359E

**FR-A820-00630(11K)**
**FR-A840-00310(11K), FR-A840-00380(15K)**

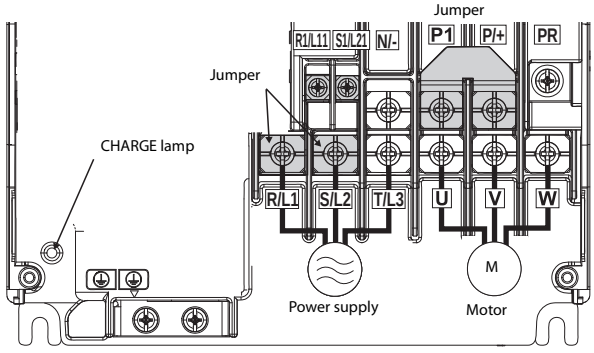


I002360E

**FR-A820-00770(15K) to FR-A820-01250(22K)**
**FR-A840-00470(18.5K), FR-A840-00620(22K)**

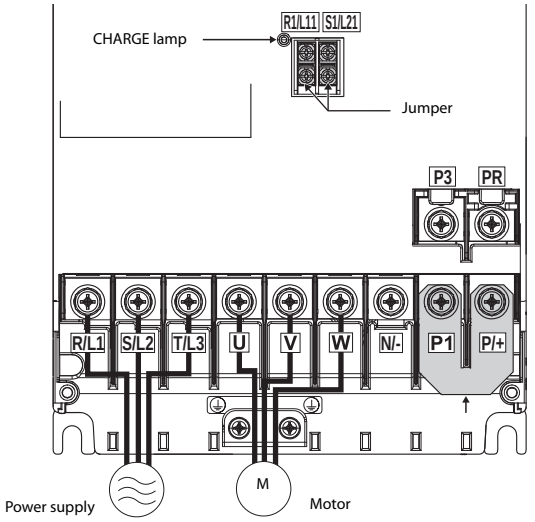


I002361E

**FR-A820-01540(30K) ①**
**FR-A840-00770(30K)**

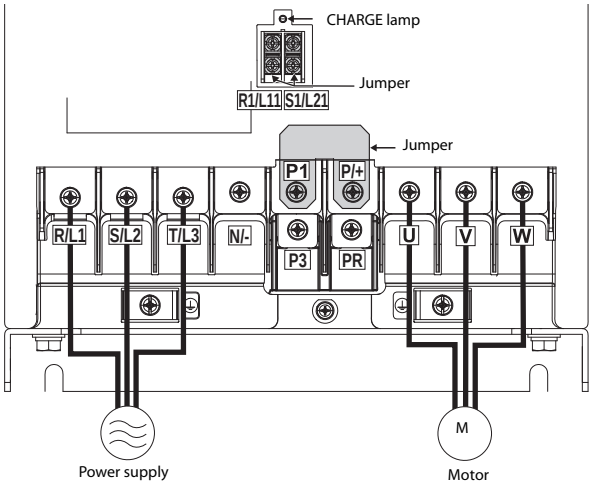


I002362E

***Tab. 2-8:*** *Terminal layout and wiring (1)*

**FR-A820-01870(37K), FR-A820-02330(45K)**

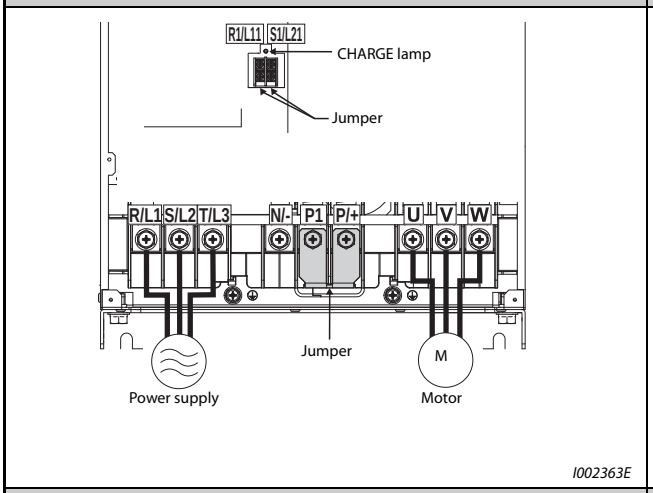


**FR-A820-03160(55K)**

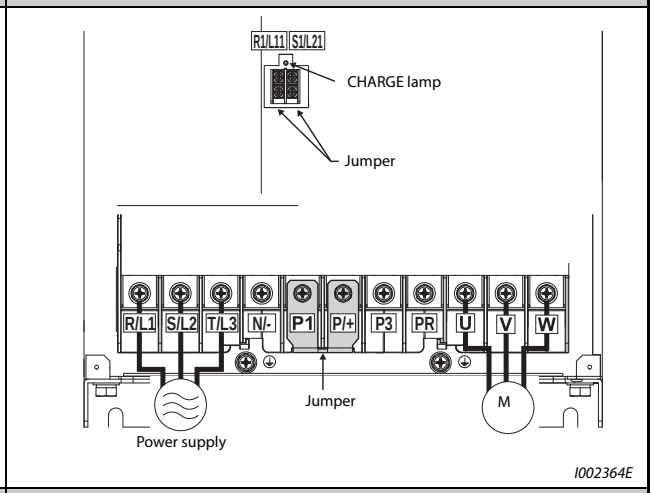


**FR-A820-03800(75K), FR-A820-04750(90K), FR-A840-03250(110K) to FR-A840-04810(185K)**

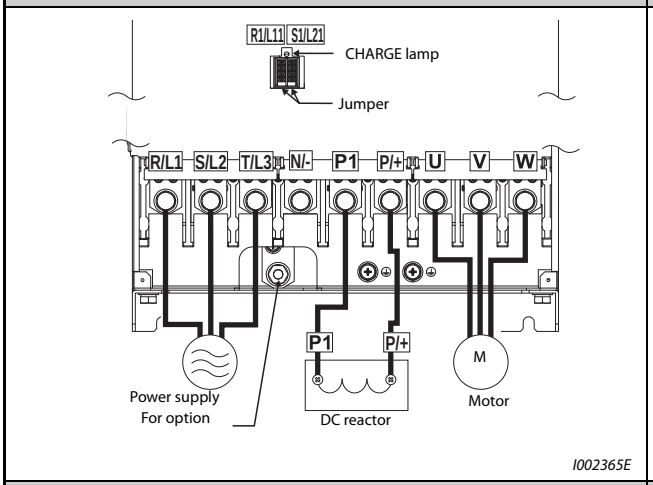


**FR-A840-00930(37K) to FR-A840-01800(55K)**

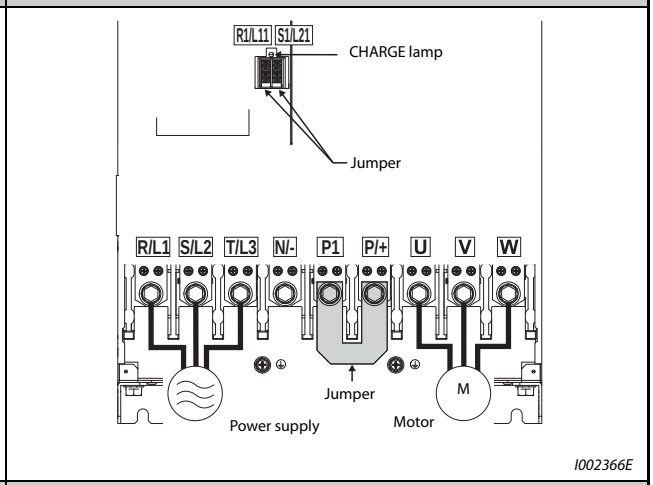


**FR-A840-02160(75K), FR-A840-02600(90K)**

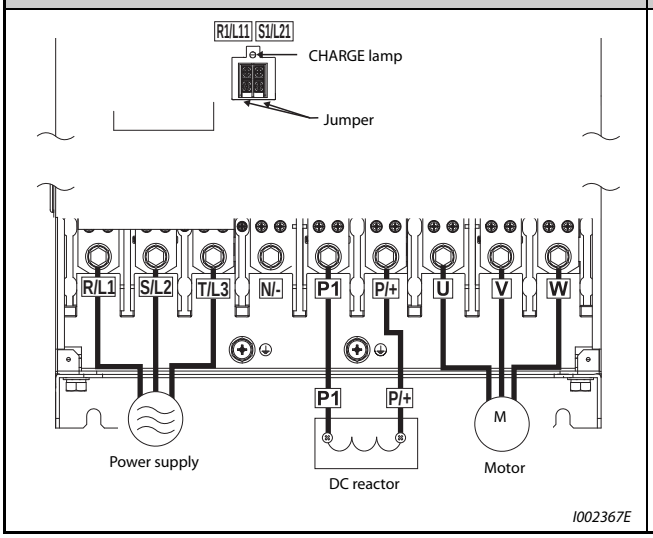


**FR-A840-05470(220K) to FR-A840-06830(280K)**

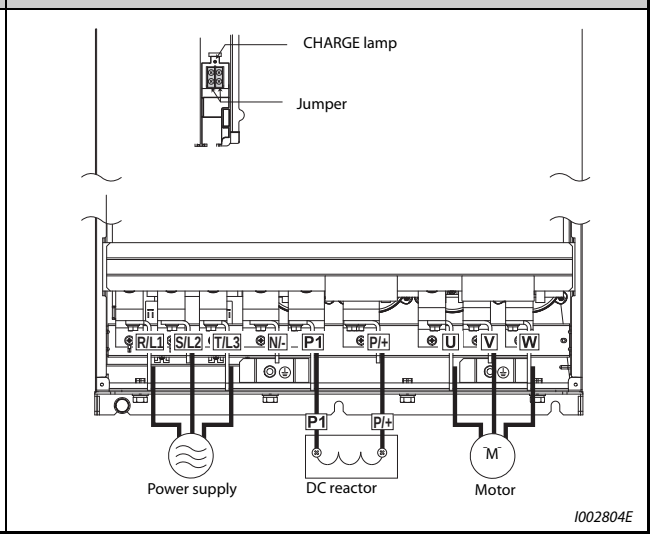


***Tab. 2-8:*** *Terminal layout and wiring (2)*

① Terminals P3 and PR of the FR-A820-01540(30K) are not provided with a screw. Do not connect anything to this.

**NOTES**

Make sure the power cables are connected to the R/L1, S/L2, and T/L3. (Phase need not be matched.) Never connect the power cable to the U, V, and W of the inverter. Doing so will damage the inverter.

Connect the motor to U, V, and W. The phase need to be matched.

When wiring the inverter main circuit conductor of the FR-A840-05470(220K) or higher, tighten a nut from the right side of the conductor. When wiring two wires, place wires on both sides of the conductor. (Refer to the drawing.) For wiring, use bolts (nuts) provided with the inverter.

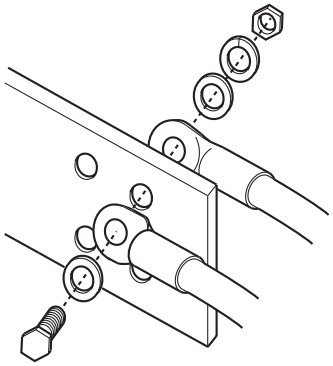

**Handling of the wiring cover**
**(FR-A820-00630(11K) to 01250(22K), FR-A840-00310(11K) to 00620(22K))**

For the hook of the wiring cover, cut off the necessary parts using a pair of needle-nose pliers etc.

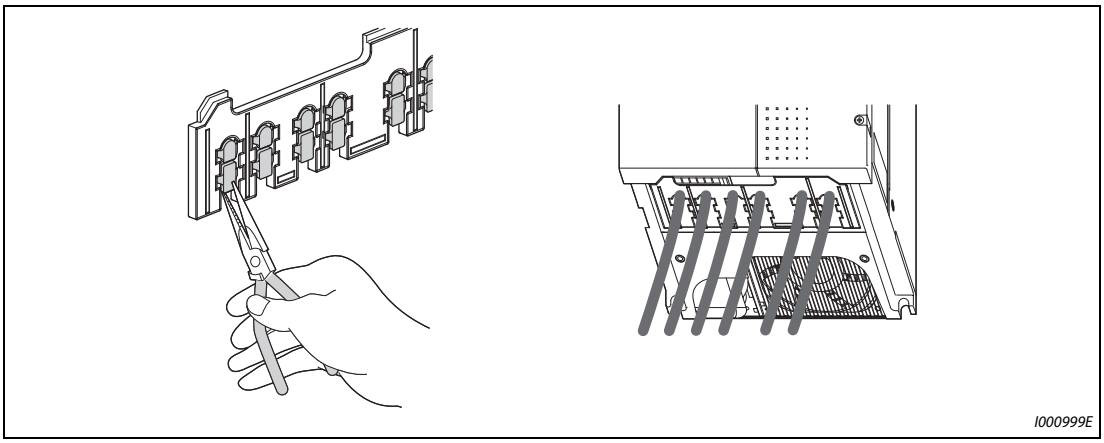


***Fig. 2-19:*** *Combed shaped wiring cover*

**NOTE**

Cut off the same number of lugs as wires. If parts where no wire is put through have been cut off (10 mm or more), protective structure (JEM1030) becomes an open type (IP00).

## 2.5.3 Applicable cables and the wiring length

Select a recommended cable size to ensure that a voltage drop will be 2% or less.
If the wiring distance is long between the inverter and motor, a voltage drop in the main circuit wires will cause the motor torque to decrease especially at a low speed.

The following table indicates a selection example for the wiring length of 20 m.

**200 V class (220 V power reception (with 150% rated current for one minute))**

| Applicable inverter model FR-A820-□ | Terminal screw size ④ | Tightening torque Nm | Crimping terminal | | Cable gauge | | | | | | | | |
|---|---|---|---|---|---|---|---|---|---|---|---|---|---|
| | | | | | HIV cables, etc. ($mm^2$) ① | | | | AWG/MCM ② | | PVC cables, etc. ($mm^2$) ③ | | |
| | | | R/L1, S/L2, T/L3 | U, V, W | R/L1, S/L2, T/L3 | U, V, W | P/+, P1 | Earthing (grounding) cable | R/L1, S/L2, T/L3 | U, V, W | R/L1, S/L2, T/L3 | U, V, W | Earthing (grounding) cable |
| 00046(0.4K) to 00167(2.2K) | M4 | 1.5 | 2-4 | 2-4 | 2 | 2 | 2 | 2 | 14 | 14 | 2.5 | 2.5 | 2.5 |
| 00250(3.7K) | M4 | 1.5 | 5.5-4 | 5.5-4 | 3.5 | 3.5 | 3.5 | 3.5 | 12 | 12 | 4 | 4 | 4 |
| 00340(5.5K) | M5(M4) | 2.5 | 5.5-5 | 5.5-5 | 5.5 | 5.5 | 5.5 | 5.5 | 10 | 10 | 6 | 6 | 6 |
| 00490(7.5K) | M5(M4) | 2.5 | 14-5 | 8-5 | 14 | 8 | 14 | 5.5 | 6 | 8 | 16 | 10 | 16 |
| 00630(11K) | M5 | 2.5 | 14-5 | 14-5 | 14 | 14 | 14 | 8 | 6 | 6 | 16 | 16 | 16 |
| 00770(15K) | M6 | 4.4 | 22-6 | 22-6 | 22 | 22 | 22 | 14 | 4 | 4 | 25 | 25 | 16 |
| 00930(18.5K) | M8(M6) | 7.8 | 38-8 | 38-8 | 38 | 38 | 38 | 14 | 2 | 2 | 35 | 35 | 25 |
| 01250(22K) | M8(M6) | 7.8 | 38-8 | 38-8 | 38 | 38 | 38 | 22 | 2 | 2 | 35 | 35 | 25 |
| 01540(30K) | M8(M6) | 7.8 | 60-8 | 60-8 | 60 | 60 | 60 | 22 | 1/0 | 1/0 | 50 | 50 | 25 |
| 01870(37K) | M10(M8) | 14.7 | 80-10 | 80-10 | 80 | 80 | 80 | 22 | 3/0 | 3/0 | 70 | 70 | 35 |
| 02330(45K) | M10(M8) | 14.7 | 100-10 | 100-10 | 100 | 100 | 100 | 38 | 4/0 | 4/0 | 95 | 95 | 50 |
| 03160(55K) | M12(M8) | 24.5 | 100-12 | 100-12 | 100 | 100 | 100 | 38 | 4/0 | 4/0 | 95 | 95 | 50 |
| 03800(75K) | M12(M10) | 24.5 | 150-12 | 150-12 | 125 | 125 | 125 | 38 | 250 | 250 | — | — | — |
| 04750(90K) | M12(M10) | 24.5 | 150-12 | 150-12 | 150 | 150 | 150 | 38 | 300 | 300 | — | — | — |

***Tab. 2-9:*** *Cable size (200 V class)*

**400 V class (440 V input power supply (with 150% rated current for one minute))**

| Applicable inverter model FR-A840-□ | Terminal screw size ④ | Tightening torque Nm | Crimping terminal | | Cable gauge | | | | | | | | |
|---|---|---|---|---|---|---|---|---|---|---|---|---|---|
| | | | | | HIV cables, etc. (mm²) ① | | | | AWG/MCM ② | | PVC cables, etc. (mm²) ③ | | |
| | | | R/L1, S/L2, T/L3 | U, V, W | R/L1, S/L2, T/L3 | U, V, W | P/+, P1 | Earthing (grounding) cable | R/L1, S/L2, T/L3 | U, V, W | R/L1, S/L2, T/L3 | U, V, W | Earthing (grounding) cable |
| 00023(0.4K) to 00126(3.7K) | M4 | 1.5 | 2-4 | 2-4 | 2 | 2 | 2 | 2 | 14 | 14 | 2.5 | 2.5 | 2.5 |
| 00170(5.5K) | M4 | 1.5 | 2-4 | 2-4 | 2 | 2 | 3.5 | 3.5 | 12 | 14 | 2.5 | 2.5 | 4 |
| 00250(7.5K) | M4 | 1.5 | 5.5-4 | 5.5-4 | 3.5 | 3.5 | 3.5 | 3.5 | 12 | 12 | 4 | 4 | 4 |
| 00310(11K) | M5 | 2.5 | 5.5-5 | 5.5-5 | 5.5 | 5.5 | 5.5 | 5.5 | 10 | 10 | 6 | 6 | 10 |
| 00380(15K) | M5 | 2.5 | 8-5 | 8-5 | 8 | 8 | 8 | 5.5 | 8 | 8 | 10 | 10 | 10 |
| 00470(18.5K) | M6 | 4.4 | 14-6 | 8-6 | 14 | 8 | 14 | 8 | 6 | 8 | 16 | 10 | 16 |
| 00620(22K) | M6 | 4.4 | 14-6 | 14-6 | 14 | 14 | 22 | 14 | 6 | 6 | 16 | 16 | 16 |
| 00770(30K) | M6 | 4.4 | 22-6 | 22-6 | 22 | 22 | 22 | 14 | 4 | 4 | 25 | 25 | 16 |
| 00930(37K) | M8 | 7.8 | 22-8 | 22-8 | 22 | 22 | 22 | 14 | 4 | 4 | 25 | 25 | 16 |
| 01160(45K) | M8 | 7.8 | 38-8 | 38-8 | 38 | 38 | 38 | 22 | 1 | 2 | 50 | 50 | 25 |
| 01800(55K) | M8 | 7.8 | 60-8 | 60-8 | 60 | 60 | 60 | 22 | 1/0 | 1/0 | 50 | 50 | 25 |
| 02160(75K) | M10 | 14.7 | 60-10 | 60-10 | 60 | 60 | 60 | 22 | 1/0 | 1/0 | 50 | 50 | 25 |
| 02600(90K) | M10 | 14.7 | 60-10 | 60-10 | 60 | 60 | 80 | 22 | 3/0 | 3/0 | 50 | 50 | 25 |
| 03250(110K) | M10(M12) | 14.7 | 80-10 | 80-10 | 80 | 80 | 80 | 38 | 3/0 | 3/0 | 70 | 70 | 35 |
| 03610(132K) | M10(M12) | 14.7 | 100-10 | 100-10 | 100 | 100 | 100 | 38 | 4/0 | 4/0 | 95 | 95 | 50 |
| 04320(160K) | M12(M10) | 24.5 | 150-12 | 150-12 | 125 | 150 | 150 | 38 | 250 | 250 | 120 | 120 | 70 |
| 04810(185K) | M12(M10) | 24.5 | 150-12 | 150-12 | 150 | 150 | 150 | 38 | 300 | 300 | 150 | 150 | 95 |
| 05470(220K) | M12(M10) | 46 | 100-12 | 100-12 | 2×100 | 2×100 | 2×100 | 60 | 2×4/0 | 2×4/0 | 2×95 | 2×95 | 95 |
| 06100(250K) | M12(M10) | 46 | 100-12 | 100-12 | 2×100 | 2×100 | 2×125 | 60 | 2×4/0 | 2×4/0 | 2×95 | 2×95 | 95 |
| 06830(280K) | M12(M10) | 46 | 150-12 | 150-12 | 2×125 | 2×125 | 2×125 | 60 | 2×250 | 2×250 | 2×120 | 2×120 | 120 |

***Tab. 2-10:*** *Cable size (400 V class)*

① For the FR-A820-03160(55K) or lower and FR-A840-01800(55K) or lower, it is the gauge of a cable with the continuous maximum permissible temperature of 75 °C (HIV cable (600 V grade heat-resistant PVC insulated wire), etc.). It assumes a surrounding air temperature of 50 °C or lower and the wiring distance of 20 m or shorter.
For the FR-A820-03800(75K) or higher, FR-A840-02160(75K) or higher, it is the gauge of the cable with the continuous maximum permissible temperature of 90 °C or higher. (LMFC (heat resistant flexible cross-linked polyethylene insulated cable), etc.). It assumes a surrounding air temperature of 50 °C or lower and in-enclosure wiring.

② For all the 200 V class capacities and FR-A840-01160(45K) or lower, it is the gauge of a cable with the continuous maximum permissible temperature of 75 °C (THHW cable). It assumes a surrounding air temperature of 40°C or lower and the wiring distance of 20 m or shorter.
For the FR-A840-01800(55K) or higher, it is the gauge of a cable with the continuous maximum permissible temperature of 90°C (THHN cable). It assumes a surrounding air temperature of 40 °C or lower and in-enclosure wiring. (Selection example for use mainly in the United States.)

③ For the FR-A820-00770(15K) or lower and the FR-A840-01160(45K) or lower, it is the gauge of a cable with the continuous maximum permissible temperature of 70 °C (PVC cable). It assumes a surrounding air temperature of 40 °C or lower and the wiring distance of 20 m or shorter.
For the FR-A820-00930(18.5K) or higher and the FR-A840-01800(55K) or higher, it is the gauge of a cable with the continuous maximum permissible temperature of 90 °C (XLPE cable). It assumes a surrounding air temperature of 40 °C or lower and in-enclosure wiring. (Selection example for use mainly in Europe.)

④ The terminal screw size indicates the size of terminal screw for R/L1, S/L2, T/L3, U, V, W, PR, PX, P/+, N/–, P1, and a screw for earthing (grounding).
The screw size for PR and PX terminals of FR-A820-00340(5.5K) and FR-A820-00490(7.5K) is indicated in parentheses.
The screw size for earthing (grounding) of FR-A820-00930(18.5K) or higher and FR-A840-04320(160K) or higher is indicated in parentheses.
A screw size for P/+ terminal for option connection of the FR-A840-03250(110K) and FR-A840-03610(132K) is indicated in parentheses.

The line voltage drop can be calculated by the following formula:

$$\text{Line voltage drop [V]} = \frac{\sqrt{3} \times \text{Wire resistance [m}\Omega\text{/m]} \times \text{Wiring distance [m]} \times \text{Current [A]}}{1000}$$

Use a larger diameter cable when the wiring distance is long or when it is desired to decrease the voltage drop (torque reduction) in the low speed range.

**NOTES**

Tighten the terminal screw to the specified torque.
A screw that has been tightened too loosely can cause a short circuit or malfunction.
A screw that has been tightened too tightly can cause a short circuit or malfunction due to the unit breakage.

Use crimping terminals with insulation sleeves to wire the power supply and motor.

### Total wiring length

● With induction motor

Connect one or more induction motors within the total wiring length shown in the following table. (The wiring length should be 100 m or shorter under vector control.)

| Pr. 72 setting (carrier frequency) | FR-A820-00046(0.4K) FR-A840-00023(0.4K) | FR-A820-00077(0.75K) FR-A840-00038(0.75K) | FR-A820-00105(1.5K) or higher FR-A840-00052(1.5K) or higher |
|---|---|---|---|
| 2 (2 kHz) or lower | 300 m | 500 m | 500 m |
| 3 (3 kHz) or higher | 200 m | 300 m | 500 m |

***Tab. 2-11:*** *Total wiring length*

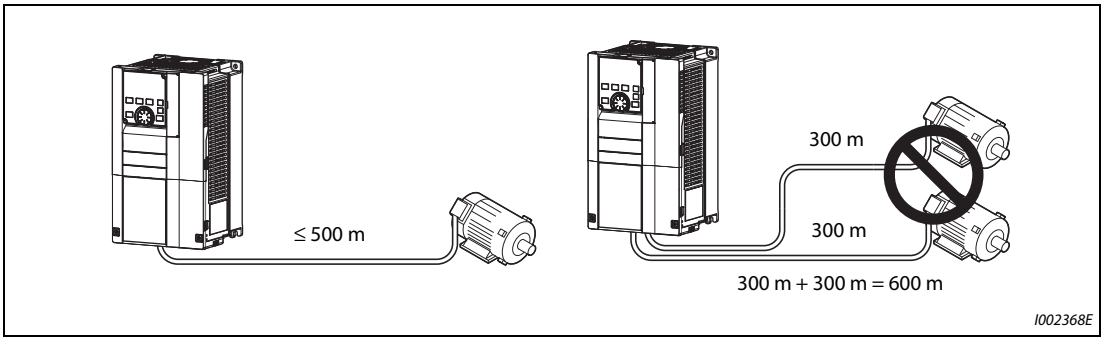


***Fig. 2-20:*** *Total wiring length (FR-A820-00105(1.5K) or higher, FR-A840-00052(1.5K) or higher)*

When driving a 400 V class motor by the inverter, surge voltages attributable to the wiring constants may occur at the motor terminals, deteriorating the insulation of the motor. In this case, take one of the following measures.

– Use a "400 V class inverter-driven insulation-enhanced motor" and set Pr. 72 "PWM frequency selection" according to the wiring length.

| | Wiring length | | |
|---|---|---|---|
| | ≤ 50 m | 50 m–100 m | ≥ 100 m |
| Pr. 72 setting | ≤ 15 (14.5 kHz) | ≤ 9 (9 kHz) | ≤ 4 (4 kHz) |

***Tab. 2-12:*** *PWM frequency*

– For the FR-A820-03160(55K) or lower and the FR-A840-01800(55K) or lower, connect a surge voltage suppression filter (FR-ASF-H/FR-BMF-H) at the output side of the inverter. For the FR-A820-03800(75K) or higher and the FR-A840-02160(75K) or higher, connect a sine wave filter (MT-BSL/BSC) at the output side of the inverter.

● With PM motor

The wiring length should be 100 m or shorter when connecting a PM motor.

Use one PM motor for one inverter. Multiple PM motors cannot be connected to an inverter.

When the wiring length exceeds 50 m for a 400 V class motor driven by an inverter under PM sensorless vector control, set "9" (6 kHz) or less in Pr. 72 "PWM frequency selection".

**NOTES**

Especially for long-distance wiring or wiring with shielded cables, the inverter may be affected by a charging current caused by stray capacitances of the wiring, leading to an activation of the overcurrent protection, malfunction of the fast-response current limit operation, or even to an inverter failure. It may also cause a malfunction or fault of the equipment connected ON the inverter output side. Stray capacitances of the wiring differ by the installation condition, use the total wiring length in the table above as reference values. If the fast-response current limit function malfunctions, disable this function. (Refer to Pr. 156 "Stall prevention operation selection" on page 5-304.)

A surge voltage suppression filter (FR-ASF-H/FR-BMF-H) can be used under V/F control and Advanced magnetic flux vector control. A sine wave filter (MT-BSL/BSC) can be used under V/F control. Do not use the filters under different control methods.

For the details of Pr. 72 "PWM frequency selection", refer to page 5-211.

Refer to page 3-19 to drive a 400V class motor by an inverter.

The carrier frequency is limited during PM sensorless vector control. (Refer to page 5-211.)

## 2.5.4 Earthing (grounding) precautions

Always earth (ground) the motor and inverter.

**Purpose of earthing (grounding)**

Generally, an electrical apparatus has an earth (ground) terminal, which must be connected to the ground before use.

An electrical circuit is usually insulated by an insulating material and encased. However, it is impossible to manufacture an insulating material that can shut off a leakage current completely, and actually, a slight current flows into the case. The purpose of earthing (grounding) the case of an electrical apparatus is to prevent operators from getting an electric shock from this leakage current when touching it.

To avoid the influence of external noises, this earthing (grounding) is important to audio equipment, sensors, computers and other apparatuses that handle low-level signals or operate very fast.

**Earthing (grounding) methods and earthing (grounding) work**

As described previously, earthing (grounding) is roughly classified into an electrical shock prevention type and a noise-influenced malfunction prevention type. Therefore, these two types should be clearly distinguished, and the following work must be done to prevent the leakage current having the inverter's high frequency components from entering the malfunction prevention type earthing (grounding):

- Whenever possible, use the independent earthing (grounding) for the inverter.
  If independent earthing (grounding) (I) is not available, use (II) common earthing (grounding) in the figure below where the inverter is connected with the other equipment at an earthing (grounding) point. Do not use the other equipment's earthing (grounding) cable to earth (ground) the inverter as shown in (III).
  A leakage current containing many high frequency components flows into the earthing (grounding) cables of the inverter and peripheral devices. Because of this, the inverter must be earthed (grounded) separately from EMI-sensitive devices.
  In a high building, it may be effective to use the EMI prevention type earthing (grounding) connecting to an iron structure frame, and electric shock prevention type earthing (grounding) with the independent earthing (grounding) together.
- This inverter must be earthed (grounded). Earthing (Grounding) must conform to the requirements of national and local safety regulations and electrical codes. (NEC section 250, IEC 536 class 1 and other applicable standards).
  A neutral-point earthed (grounded) power supply for 400 V class inverter in compliance with EN standard must be used.
- Use the thickest possible earthing (grounding) cable. The earthing (grounding) cable should be the size indicated in the table on page 2-29.
- The earthing (grounding) point should be as close as possible to the inverter, and the earth (ground) wire length should be as short as possible.
- Run the earthing (grounding) cable as far away as possible from the I/O wiring of equipment sensitive to noises and run them in parallel in the minimum distance.

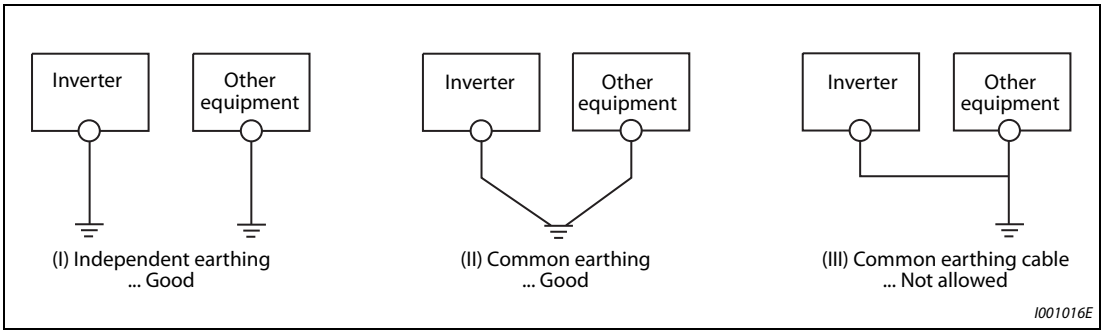


***Fig. 2-21:*** *Earthing the drive*

**NOTE** To be compliant with the EU Directive (Low Voltage Directive), refer to the Installation Guideline.

# 2.6 Control circuit

## 2.6.1 Details on the control circuit terminals

Input signal function of the terminals in grey shaded fields can be selected by setting Pr. 178 to Pr. 196 (I/O terminal function selection). (Refer to page 5-409.)

### Input signal

| Type | Terminal Symbol | Terminal name | Terminal function description | | Rated specification | Refer to page |
|---|---|---|---|---|---|---|
| Contact input | STF | Forward rotation start | Turn ON the STF signal to start forward rotation and turn it OFF to stop. | When the STF and STR signals are turned ON simultaneously, the stop command is given. | Input resistance 4.7 kΩ<br>Voltage when contacts are open: 21 to 27 V DC<br>When contacts are short-circuited: 4 to 6 mA DC | 5-417 |
| | STR | Reverse rotation start | Turn ON the STR signal to start reverse rotation and turn it OFF to stop. | | | |
| | STP (STOP) | Start self-holding selection | Turn ON the STOP signal to self-hold the start signal. | | | 5-417 |
| | RH, RM, RL | Multi-speed selection | Multi-speed can be selected according to the combination of RH, RM and RL signals. | | | 5-280 |
| | JOG | Jog mode selection | Turn ON the JOG signal to enable JOG operation (initial setting) and turn ON the start signal (STF or STR) to start JOG operation. | | | 5-278 |
| | | Pulse train input | Terminal JOG is also used as a pulse train input terminal. To use as a pulse train input terminal, change the Pr. 291 setting. (maximum input pulse: 100k pulses/s) | | Input resistance 2 kΩ<br>When contacts are short-circuited: 8 to 13 mA DC | 5-274 |
| | RT | Second function selection | Turn ON the RT signal to enable the second function. When the second function such as "second torque boost" and "second V/F (base frequency)" is set, turning ON the RT signal enables the selected function. | | Input resistance 4.7 kΩ<br>Voltage when contacts are open: 21 to 27 V DC<br>When contacts are short-circuited: 4 to 6 mA DC | 5-415 |
| | MRS | Output stop | Turn ON the MRS signal (20 ms or more) to stop the inverter output.<br>Use this signal to shut off the inverter output when stopping the motor with an electromagnetic brake. | | | 5-413 |
| | RES | Reset | Use this signal to reset a fault output provided when a protective function is activated. Turn ON the RES signal for 0.1 s or longer, then turn it OFF.<br>In the initial setting, reset is set always-enabled. By setting Pr. 75, reset can be set enabled only at fault occurrence. The inverter recovers about 1 s after the reset is released. | | | 5-184 |
| | AU | Terminal 4 input selection | The terminal 4 function is available only when the AU signal is turned ON.<br>Turning the AU signal ON makes terminal 2 invalid. | | | 5-376 |
| | CS | Selection of automatic restart after instantaneous power failure | When the CS signal is left ON, the inverter restarts automatically at power restoration. Note that restart setting is necessary for this operation. In the initial setting, a restart is disabled. | | | 5-540<br>5-549 |
| | SD | Contact input common (sink) ② | Common terminal for the contact input terminal (sink logic), terminal FM. | | — | — |
| | | External transistor common (source) ③ | Connect this terminal to the power supply common terminal of a transistor output (open collector output) device, such as a programmable controller, in the source logic to avoid malfunction by undesirable current. | | | |
| | | 24 V DC power supply common | Common terminal for the 24 V DC power supply (terminal PC, terminal +24)<br>Isolated from terminals 5 and SE. | | | |

***Tab. 2-13:*** *Input signals (1)*

| Type | Terminal Symbol | Terminal name | Terminal function description | Rated specification | Refer to page |
|---|---|---|---|---|---|
| Contact input | PC | External transistor common (sink) ② | Connect this terminal to the power supply common terminal of a transistor output (open collector output) device, such as a programmable controller, in the sink logic to avoid malfunction by undesirable currents. | Power supply voltage range 19.2 to 28.8 V DC Permissible load current 100 mA | 2-41 |
| | | Contact input common (source) ③ | Common terminal for contact input terminal (source logic). | | |
| | | 24 V DC power supply | Can be used as 24 V DC 0.1 A power supply. | | |
| Frequency setting | 10E | Frequency setting power supply | When connecting the frequency setting potentiometer at an initial status, connect it to the terminal 10. Change the input specifications of the terminal 2 using Pr. 73 when connecting it to the terminal 10E. | 10 V DC ±0.4 V Permissible load current 10 mA | 5-376 |
| | 10 | | | 5 V DC ±0.5 V Permissible load current 10 mA | 5-376 |
| | 2 | Frequency setting (voltage) | Inputting 0 to 5 V DC (or 0 to 10 V, 0 to 20 mA) provides the maximum output frequency at 5 V (10 V, 20 mA) and makes input and output proportional. Use Pr. 73 to switch among input 0 to 5 V DC (initial setting), 0 to 10 V DC, and 0 to 20 mA. Set the voltage/current input switch in the ON position to select current input (0 to 20 mA). ① | When voltage is input: Input resistance 10 kΩ ±1 kΩ Maximum permissible voltage 20 V DC When current is input: Input resistance 245 Ω ± 5 Ω Permissible maximum current 30 mA 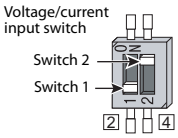  | 5-376 |
| | 4 | Frequency setting (current) | Inputting 4 to 20 mA DC (or 0 to 5 V, 0 to 10 V) provides the maximum output frequency at 20 mA and makes input and output proportional. This input signal is valid only when the AU signal is ON (terminal 2 input is invalid). Use Pr. 267 to switch among input 4 to 20 mA (initial setting), 0 to 5 V DC, and 0 to 10 V DC. Set the voltage/current input switch in the OFF position to select voltage input (0 to 5 V/0 to 10 V). ① Use Pr. 858 to switch terminal functions. | | 5-376 |
| | 1 | Frequency setting auxiliary | Inputting 0 to ±5 V DC or 0 to ±10 V DC adds this signal to terminal 2 or 4 frequency setting signal. Use Pr. 73 to switch between input 0 to ± 5 V DC and 0 to ±10 V DC (initial setting). Use Pr. 868 to switch terminal functions. | Input resistance 10 kΩ ±1 kΩ Permissible maximum voltage ±20 V DC | 5-376 |
| | 5 | Frequency setting common | Common terminal for frequency setting signal (terminal 2, 1 or 4) and analog output terminal AM, CA. Do not earth (ground). | — | 5-376 |
| Thermistor | 10<br>2 | PTC thermistor input | For receiving PTC thermistor outputs. When PTC thermistor is valid (Pr. 561 ≠ "9999"), the terminal 2 is not available for frequency setting. | Applicable PTC thermistor specification Overheat detection resistance: 0.5 Ω to 30 kΩ (Set by Pr. 561) | 5-284 |
| External power supply input | +24 | 24 V external power supply input | For connecting 24 V external power supply. If the 24 V external power supply is connected, power is supplied to the control circuit while the main power circuit is OFF. | Input voltage 23 to 25.5 V DC Input current 1.4 A or less | 2-51 |

***Tab. 2-13:*** *Input signals (2)*

① Set Pr. 73, Pr. 267, and the voltage/current input switch correctly, then input an analog signal in accordance with the setting.
Applying a voltage with the voltage/current input switch ON (current input is selected) or a current with the switch OFF (voltage input is selected) could cause component damage of the inverter or analog circuits of output devices. (For the details, refer to page 5-376.)

② The sink logic is initially set for the FM-type inverter.

③ The source logic is initially set for the CA-type inverter.

### Output signal

| Type | Terminal Symbol | Terminal name | Terminal function description | | Rated specification | Refer to page |
|---|---|---|---|---|---|---|
| Relay | A1, B1, C1 | Relay output 1 (fault output) | 1 changeover contact output that indicates that an inverter's protective function has been activated and the outputs are stopped. Fault: discontinuity across B and C (continuity across A and C), Normal: continuity across Band C (discontinuity across A and C) | | Contact capacity 230 V AC 0.3 A (power factor = 0.4) 30 V DC 0.3 A | 5-350 |
| | A2, B2, C2 | Relay output 2 | 1 changeover contact output | | | 5-350 |
| Open collector | RUN | Inverter running | Switched to LOW when the inverter output frequency is equal to or higher than the starting frequency (initial value 0.5 Hz). Switched to HIGH during stop or DC injection brake operation. | | Permissible load 24 V DC (maximum 27 V DC) 0.1 A (The voltage drop is 2.8 V at maximum while the signal is ON.) LOW is when the open collector output transistor is ON (conducted). HIGH is when the transistor is OFF (not conducted). | 5-350 |
| | SU | Up to frequency | Switched to LOW when the output frequency is within the set frequency range ±10% (initial value). Switched to HIGH during acceleration/ deceleration and at a stop. | Fault code (4 bits) output. (Refer to page 5-373.) | | 5-361 |
| | OL | Overload warning | Switched to LOW when stall prevention is activated by the stall prevention function. Switched to HIGH when stall prevention is cancelled. | | | 5-312 |
| | IPF | Instantaneous power failure | Switched to LOW when an instantaneous power failure occurs or when the undervoltage protection is activated. | | | 5-540, 5-558 |
| | FU | Frequency detection | Switched to LOW when the inverter output frequency is equal to or higher than the preset detection frequency, and to HIGH when it is less than the preset detection frequency. | | | 5-361 |
| | SE | Open collector output common | Common terminal for terminals RUN, SU, OL, IPF, FU | | — | — |
| Pulse | FM ① | For meter | Outputs a selected monitored item (such as output frequency) among several monitored items. The signal is not output during an inverter reset. The output signal is proportional to the magnitude of the corresponding monitoring item. Use Pr. 55, Pr. 56, and Pr. 866 to set full scales for the monitored output frequency, output current, and torque. (Refer to page 5-330.) | Output item: Output frequency (initial setting) | Permissible load current 2 mA For full scale 1440 pulses/s | 5-330 |
| | | NPN open collector output | | This terminal can be used for open collector outputs by setting Pr. 291. | Maximum output pulse 50k pulses/s Permissible load current 80 mA | 5-274 |
| Analog | AM | Analog voltage output | | Output item: Output frequency (initial setting) | Output signal 0 to ±10 V DC, Permissible load current 1 mA (load impedance 10 kΩ or more) Resolution 8 bits | 5-330 |
| | CA ② | Analog current output | | | Load impedance 200 Ω to 450 Ω Output signal 0 to 20 mADC | 5-330 |

***Tab. 2-14:*** *Output signals*

① Terminal FM is provided in the FM-type inverter.

② Terminal CA is provided in the CA-type inverter.

### Communication

| Type | Terminal Symbol | | Terminal name | Terminal function description | | Refer to page |
|---|---|---|---|---|---|---|
| RS-485 | — | | PU connector | With the PU connector, communication can be made through RS-485. (For connection on a 1:1 basis only)<br>• Conforming standard: EIA-485 (RS-485)<br>• Transmission format: Multidrop link<br>• Communication speed: 4800 to 115200 bps<br>• Overall length: 500 m | | 5-577 |
| RS-485 | RS-485 terminals | TXD+ | Inverter transmission terminal | The RS-485 terminals enables the communication by RS-485.<br>• Conforming standard: EIA-485 (RS-485)<br>• Transmission format: Multidrop link<br>• Communication speed: 300 to 115200 bps<br>• Overall length: 500 m | | 5-579 |
| | | TXD- | | | | |
| | | RXD+ | Inverter reception terminal | | | |
| | | RXD- | | | | |
| | | SG | Earthing (grounding) | | | |
| USB | — | | USB A connector | • A connector (receptacle)<br>• A USB memory device enables parameter copies and the trace function. | • Interface: Conforms to USB1.1 (USB2.0 full-speed compatible)<br>• Transmission speed: 12 Mbps | 2-58 |
| | | | USB B connector | • Mini B connector (receptacle)<br>• Connected to a personal computer via USB to enable setting, monitoring, test operations of the inverter by FR Configurator2. | | 2-58 |

***Tab. 2-15:*** *Communication signals*

### Safety stop signal

| Terminal Symbol | Terminal name | Terminal function description | Rated specification | Refer to page |
|---|---|---|---|---|
| S1 | Safety stop input (Channel 1) | The terminals S1 and S2 are used for the safety stop input signal for the safety relay module. The terminals S1 and S2 are used at the same time (dual channel).<br>Inverter output is shutoff by shortening/opening between terminals S1 and SIC, or between S2 and SIC.<br>In the initial status, terminals S1 and S2 are shorted with the terminal PC by shorting wires. The terminal SIC is shorted with the terminal SD. Remove the shorting wires and connect the safety relay module when using the safety stop function. | Input resistance 4.7 kΩ<br>Input current 4 to 6 mA DC (with 24 V DC input) | 2-54 |
| S2 | Safety stop input (Channel 2) | | | |
| SIC | Safety stop input terminal common | Common terminal for terminals S1 and S2. | — | |
| SO | Safety monitor output (open collector output) | Indicates the safety stop input signal status.<br>Switched to LOW when the status is other than the internal safety circuit failure. Switched to HIGH during the internal safety circuit failure status.<br>(LOW is when the open collector output transistor is ON (conducted). HIGH is when the transistor is OFF (not conducted).)<br>Refer to the Safety stop function instruction manual (BCN-A23228-001) when the signal is switched to HIGH while both terminals S1 and S2 are open. (Please contact your sales representative for the manual.) | Permissible load 24 V DC (27 V DC at maximum), 0.1 A (A voltage drop is 3.4 V at maximum while the signal is ON.)<br>(A voltage drop is 3.4 V at maximum while the signal is ON.) | |
| SOC | Safety monitor output common | Common terminal for terminal SO. | — | |

***Tab. 2-16:*** *Safety stop signal*

## 2.6.2 Control logic (sink/source) change

Change the control logic of input signals as necessary.

To change the control logic, change the jumper connector position on the control circuit board.

Connect the jumper connector to the connector pin of the desired control logic.

The control logic of input signals is initially set to the sink logic (SINK) for the FM type.

The control logic of input signals is initially set to the source logic (SOURCE) for the CA type.

(The output signals may be used in either the sink or source logic independently of the jumper connector position.)

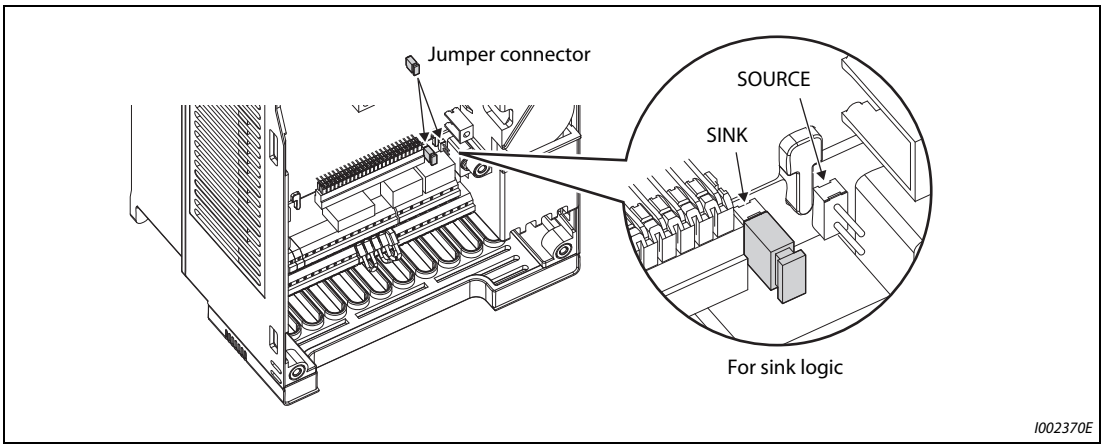


***Fig. 2-22:*** *Changing the control logic*

**NOTES**

- Make sure that the jumper connector is installed correctly.
- Never change the control logic while power is ON.

### Sink logic and source logic

- In the sink logic, a signal switches ON when a current flows from the corresponding signal input terminal.
  Terminal SD is common to the contact input signals. Terminal SE is common to the open collector output signals.
- In the source logic, a signal switches ON when a current flows into the corresponding signal input terminal.
  Terminal PC is common to the contact input signals. Terminal SE is common to the open collector output signals.

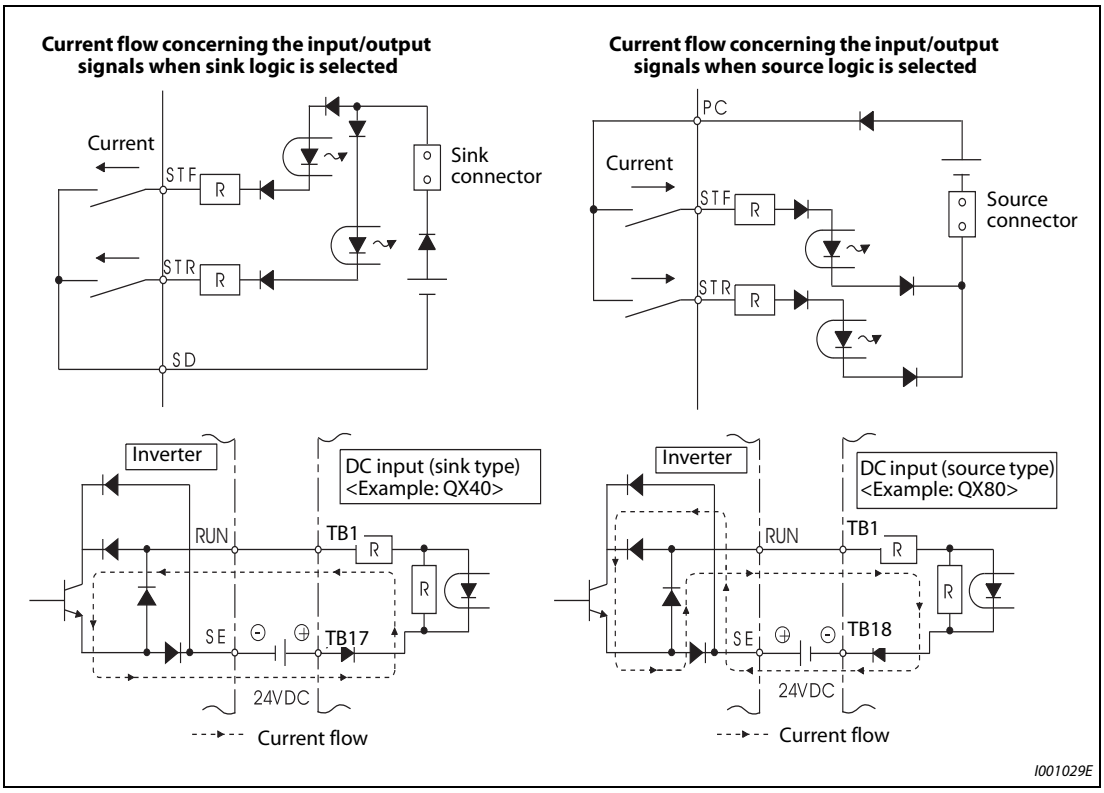


***Fig. 2-23:*** *Changing the control logic*

- When using an external power supply for transistor output

– Sink logic
Use the terminal PC as a common terminal, and perform wiring as shown below. (Do not connect terminal SD of the inverter with the terminal 0 V of the external power supply. When using terminals PC-SD as a 24 V DC power supply, do not install an external power supply in parallel with the inverter. Doing so may cause a malfunction in the inverter due to undesirable currents.)

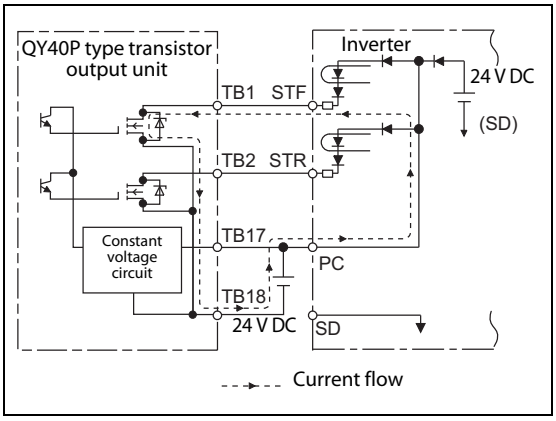


***Fig. 2-24:***
*Using an external power supply in connection with the outputs of a PLC (sink logic)*

I002371E

– Source logic
Use the terminal SD as a common terminal, and perform wiring as shown below. (Do not connect terminal PC of the inverter with the terminal +24 V of the external power supply. When using terminals PC-SD as a 24 V DC power supply, do not install an external power supply in parallel with the inverter. Doing so may cause a malfunction in the inverter due to undesirable currents.)

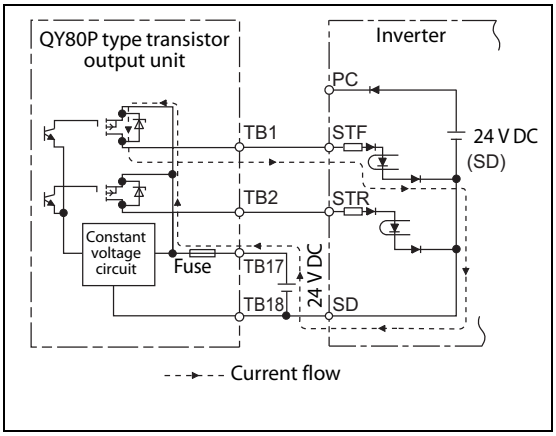


***Fig. 2-25:***
*Using an external power supply in connection with the outputs of a PLC (source logic)*

I002372E

## 2.6.3 Wiring of control circuit

### Control circuit terminal layout

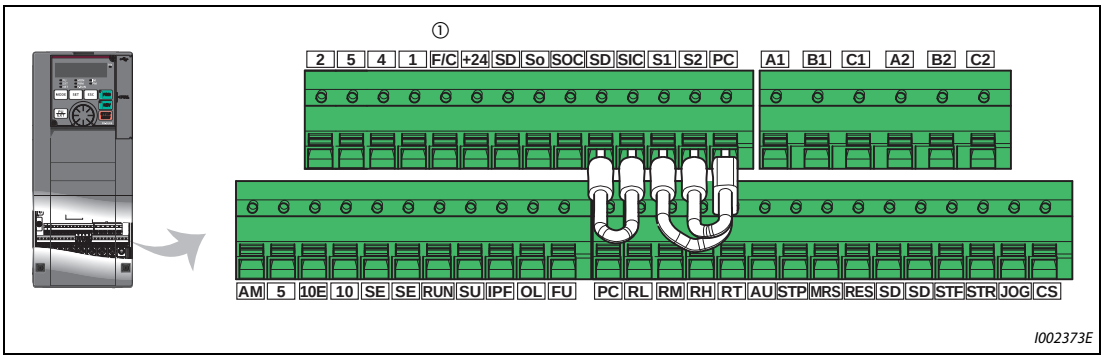


***Fig. 2-26:*** *Terminal layout*

① This terminal operates as the terminal FM for the FM type, and as the terminal CA for the CA type.

### Wiring method

- Power supply connection

For the control circuit wiring, strip off the sheath of a cable, and use it with a blade terminal. For a single wire, strip off the sheath of the wire and apply directly.
Insert the blade terminal or the single wire into a socket of the terminal.

① Strip off the sheath for the below length. If the length of the sheath peeled is too long, a short circuit may occur with neighbouring wires. If the length is too short, wires might come off.
Wire the stripped cable after twisting it to prevent it from becoming loose. In addition, do not solder it.

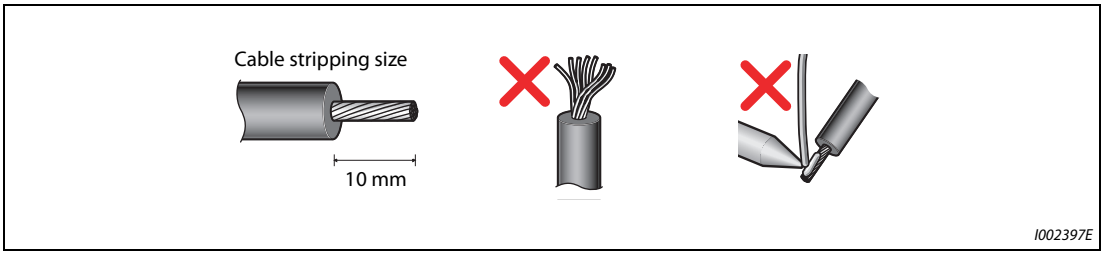


***Fig. 2-27:*** *Preparation of the cable*

② Crimp the blade terminal.
Insert wires to a blade terminal, and check that the wires come out for about 0 to 0.5 mm from a sleeve.
Check the condition of the blade terminal after crimping. Do not use a blade terminal of which the crimping is inappropriate, or the face is damaged.

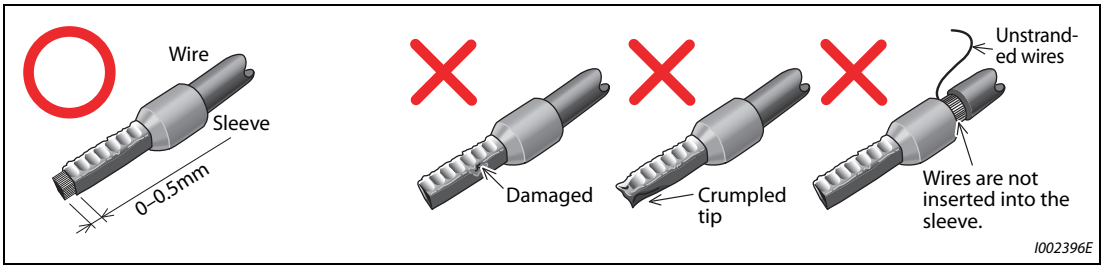


***Fig. 2-28:*** *Crimped wire end sleeves*

Blade terminals commercially available (as of February 2012)

| Cable gauge ($mm^2$) | Blade terminal model | | | Crimping tool |
|---|---|---|---|---|
| | With insulation sleeve | Without insulation sleeve | For UL wire ① | |
| 0.3 | AI 0,5-10WH | — | — | CRIMPFOX 6 |
| 0.5 | AI 0,5-10WH | — | AI 0,5-10WH-GB | |
| 0.75 | AI 0,75-10GY | A 0,75-10 | AI 0,75-10GY-GB | |
| 1 | AI 1-10RD | A 1-10 | AI 1-10RD/1000GB | |
| 1.25, 1.5 | AI 1,5-10BK | A 1,5-10 | AI 1,5-10BK/1000GB ② | |
| 0.75 (for two wires) | AI-TWIN 2 × 0,75-10GY | — | — | |

***Tab. 2-17:*** *Phoenix Contact Co., Ltd.*

① A blade terminal with an insulation sleeve compatible with the MTW wire which has a thick wire insulation.

② Applicable for the terminal A1, B1, C1, A2, B2, C2.

| Cable gauge ($mm^2$) | Blade terminal product number | Insulation product number | Crimping tool product number |
|---|---|---|---|
| 0.3 to 0.75 | BT 0.75-11 | VC 0.75 | NH 69 |

***Tab. 2-18:*** *NICHIFU Co.,Ltd*

③ Insert the wires into a socket

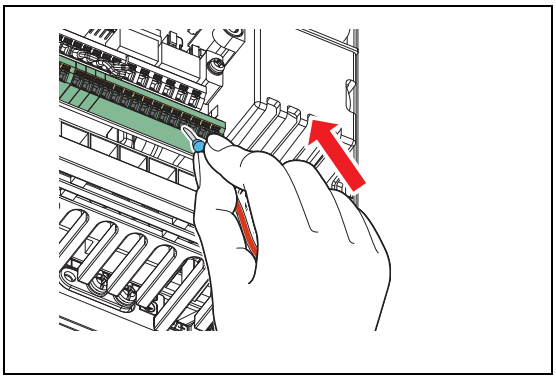


***Fig. 2-29:***
*Cable connection*

When using a single wire or stranded wires without a blade terminal, push the open/close button all the way down with a flathead screwdriver, and insert the wire.

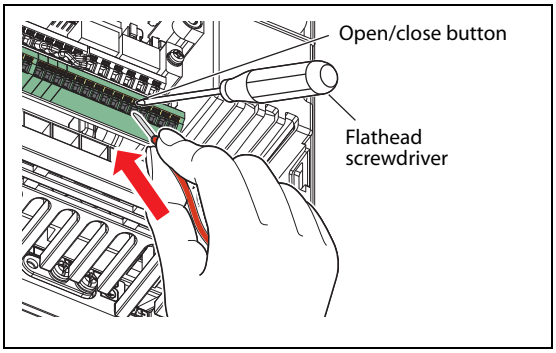


***Fig. 2-30:***
*Connection of a stranded wire*

I002399E

**NOTES**

When using stranded wires without a blade terminal, twist enough to avoid short circuit with a nearby terminals or wires.

Place the flathead screwdriver vertical to the open/close button. In case the blade tip slips, it may cause an inverter damage or injury.

- Wire removal

  Pull the wire while pushing the open/close button all the way down firmly with a flathead screwdriver.

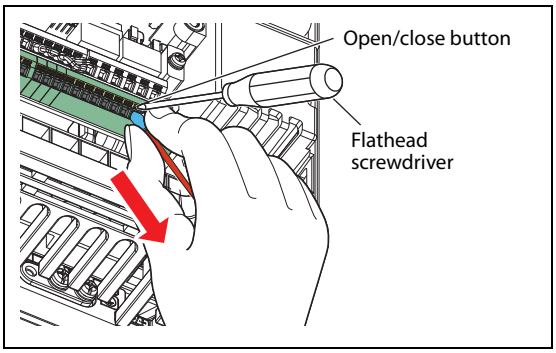


***Fig. 2-31:***
*Wire removal*

I002400E

**NOTES**

Pulling out the wire forcefully without pushing the open/close button all the way down may damage the terminal block.

Use a small flathead screwdriver (tip thickness: 0.4 mm/tip width: 2.5 mm).
If a flathead screwdriver with a narrow tip is used, terminal block may be damaged.
Commercially available products (as of February 2012)

| Name | Model | Manufacturer |
|---|---|---|
| Driver | SZF 0-0,4×2,5 | Phoenix Contact Co., Ltd. |

Place the flathead screwdriver vertical to the open/close button. In case the blade tip slips, it may cause an inverter damage or injury.

**Common terminals of the control circuit (SD, PC, 5, SE)**

- Terminals SD (sink logic), PC (source logic), 5, and SE are common terminals (0V) for I/O signals. (All common terminals are isolated from each other.) Do not earth (ground) these terminals. Avoid connecting the terminal SD (sink logic) with 5, the terminal PC (source logic) with 5, and the terminal SE with 5.
- In the sink logic, terminal SD is a common terminal for the contact input terminals (STF, STR, STP (STOP), RH, RM, RL, JOG, RT, MRS, RES, AU, CS) and the pulse train output terminal (FM ①). Every contact input terminal is isolated from the internal control circuit by photocoupler.
- In the source logic, terminal PC is a common terminal for the contact input terminals (STF, STR, STP (STOP), RH, RM, RL, JOG, RT, MRS, RES, AU, CS). Every contact input terminal is isolated from the internal control circuit by photocoupler.
- Terminal 5 is a common terminal for the frequency setting terminals (2, 1 or 4) and the analog output terminals (AM, CA ②). It should be protected from external noise using a shielded or twisted cable.
- Terminal SE is a common terminal for the open collector output terminals (RUN, SU, OL, IPF, FU). The contact input circuit is isolated from the internal control circuit by photocoupler.

① Terminal FM is provided in the FM-type inverter.

② Terminal CA is provided in the CA-type inverter.

**Signal inputs by contactless switches**

The contact input terminals of the inverter (STF, STR, STP (STOP), RH, RM, RL, JOG, RT, MRS, RES, AU, CS) can be controlled using a transistor instead of a contact switch as shown below.

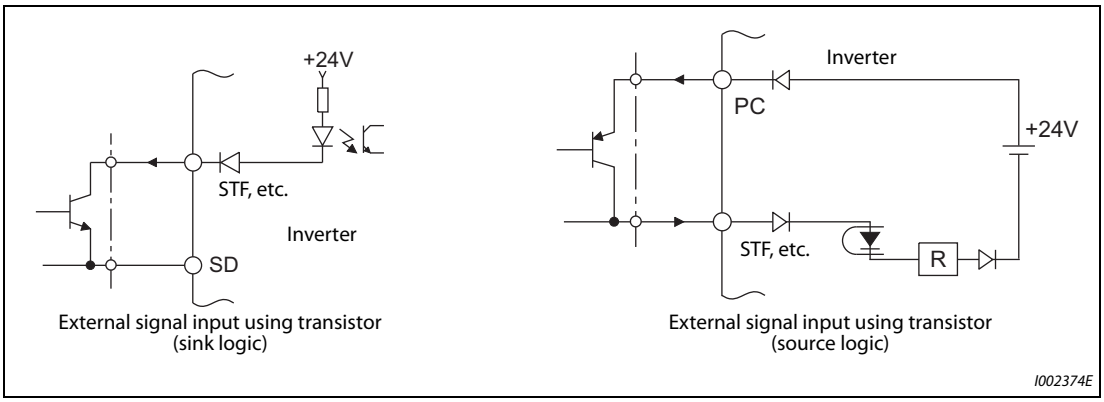


***Fig. 2-32:*** *External signal input using transistor*

## 2.6.4 Wiring precautions

- It is recommended to use a cable of 0.75 $mm^2$ for the connection to the control circuit terminals.
- The wiring length should be 30 m (200 m for the terminal FM) at the maximum.
- Use two or more parallel micro-signal contacts or twin contacts to prevent contact faults when using contact inputs since the control circuit input signals are micro-currents.

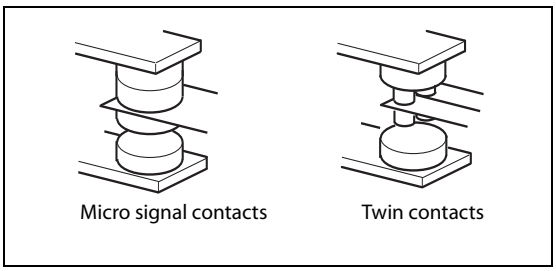


***Fig. 2-33:*** *Contacts*

- To suppress EMI, use shielded or twisted cables for the control circuit terminals and run them away from the main and power circuits (including the 200 V relay sequence circuit). For the cables connected to the control circuit terminals, connect their shields to the common terminal of the connected control circuit terminal. When connecting an external power supply to the terminal PC, however, connect the shield of the power supply cable to the negative side of the external power supply. Do not directly earth (ground) the shield to the enclosure, etc.
- Do not apply a voltage to the contact input terminals (STF, etc.) of the control circuit.
- Always apply a voltage to the fault output terminals (A1, B1, C1, A2, B2, C2) via a relay coil, lamp, etc.
- For the FR-A820-03160(55K) or higher and FR-A840-02160(75K) or higher, separate the wiring of the control circuit away from the wiring of the main circuit.
  Make cuts in rubber bush of the inverter side and lead the wires through.

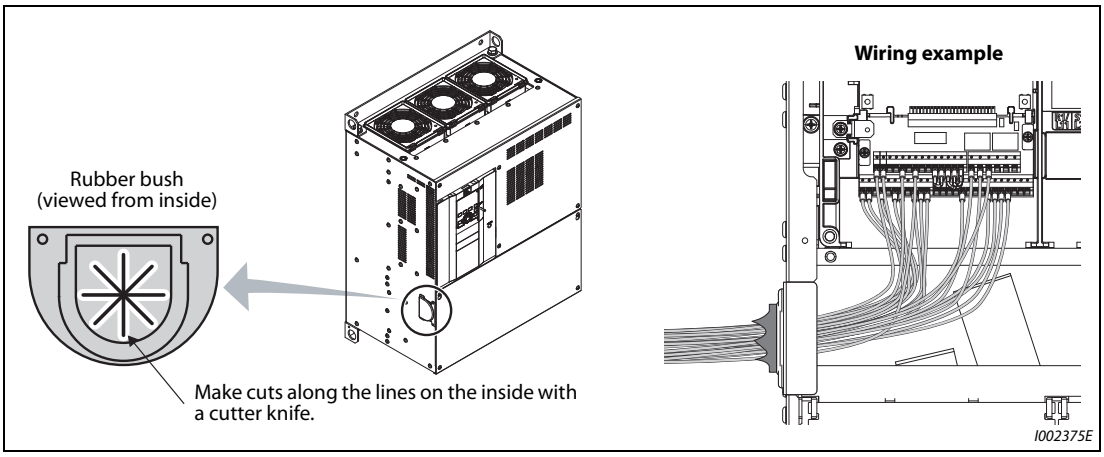


***Fig. 2-34:*** *Wiring of the control circuit of the FR-A820-03160(55K) or higher and FR-A840-02160(75K) or higher*

## 2.6.5 When using separate power supplies for the control circuit and the main circuit

**Cable size for the control circuit power supply (terminals R1/L11 and S1/L21)**

- Terminal screw size: M4
- Cable gauge: 0.75 $mm^2$ to 2 $mm^2$
- Tightening torque: 1.5 Nm

**Connection method**

When a fault occurs, opening of the electromagnetic contactor (MC) on the inverter power supply side results in power loss in the control circuit, disabling the fault output signal retention. Terminals R1/L11 and S1/L21 are provided to hold a fault signal. In this case, connect the power supply terminals R1/L11 and S1/L21 of the control circuit to the input side of the MC.
Do not connect the power cable to incorrect terminals. Doing so may damage the inverter.

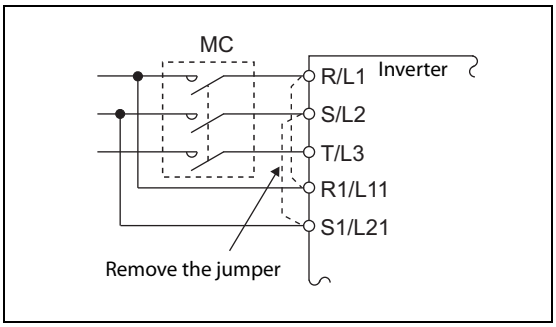


***Fig. 2-35:***
*Power supply for control and main circuit*

**FR-A820-00250(3.7K) or lower, FR-A840-00126(3.7K) or lower**

① Remove the upper screws.

② Remove the lower screws.

③ Remove the jumper.

④ Connect the separate power supply cable for the control circuit to **the lower terminals (R1/L11, S1/L21)**.

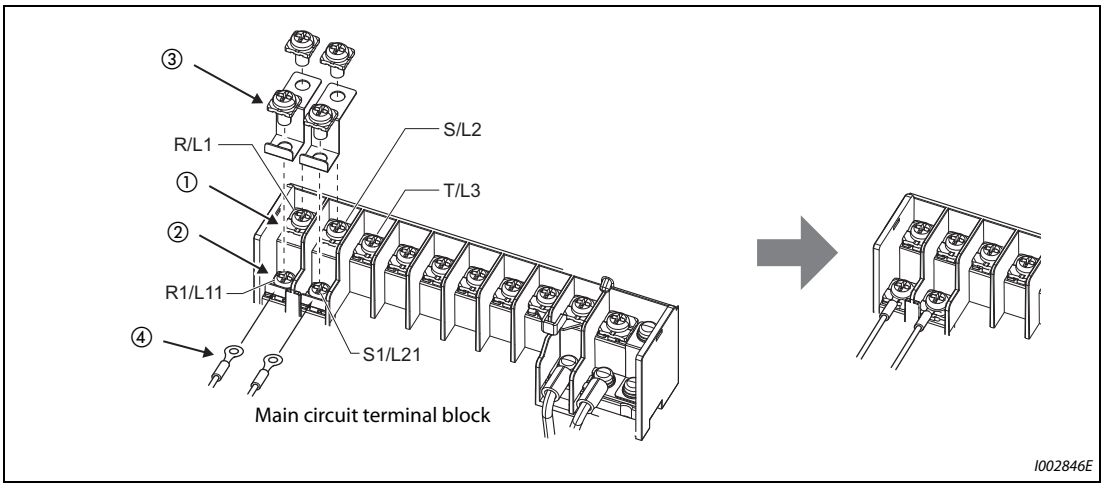


***Fig. 2-36:*** *Detailed view of the terminals*

**FR-A820-00340(5.5K) to FR-A820-00630(11K), FR-A840-00170(5.5K) to FR-A840-00380(15K)**

① Remove the upper screws.

② Remove the lower screws.

③ Remove the jumper.

④ Connect the separate power supply cable for the control circuit to **the upper terminals (R1/L11, S1/L21)**.

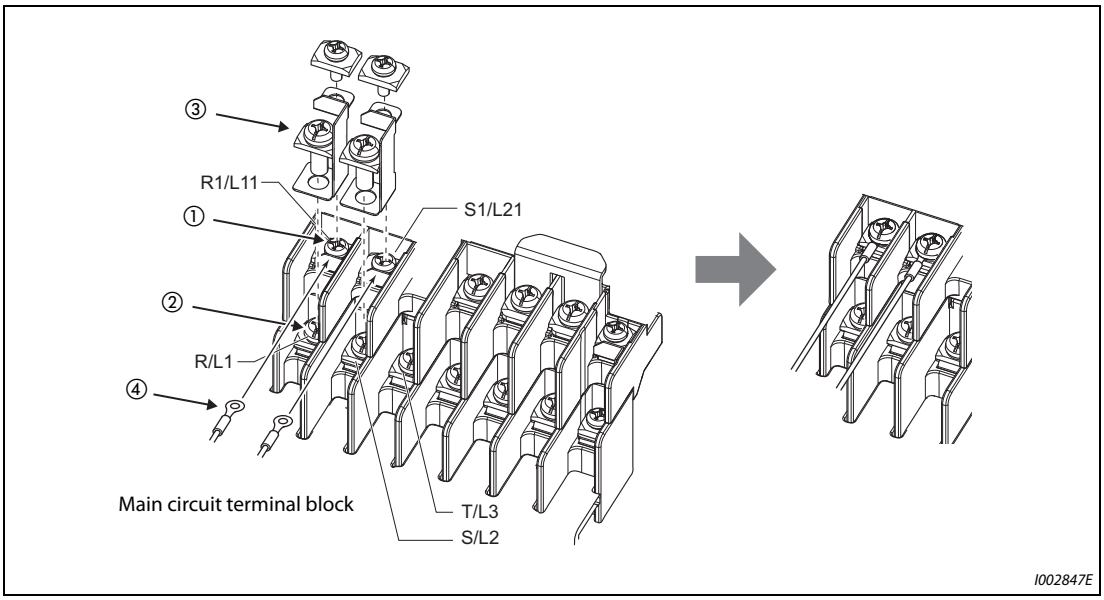


***Fig. 2-37:*** *Detailed view of the terminals*

**FR-A820-00770(15K) or higher, FR-A840-00470(18.5K) or higher**

① Remove the upper screws.

② Remove the lower screws.

③ Pull the jumper toward you to remove.

④ Connect the separate power supply cable for the control circuit to **the upper terminals (R1/L11, S1/L21)**.

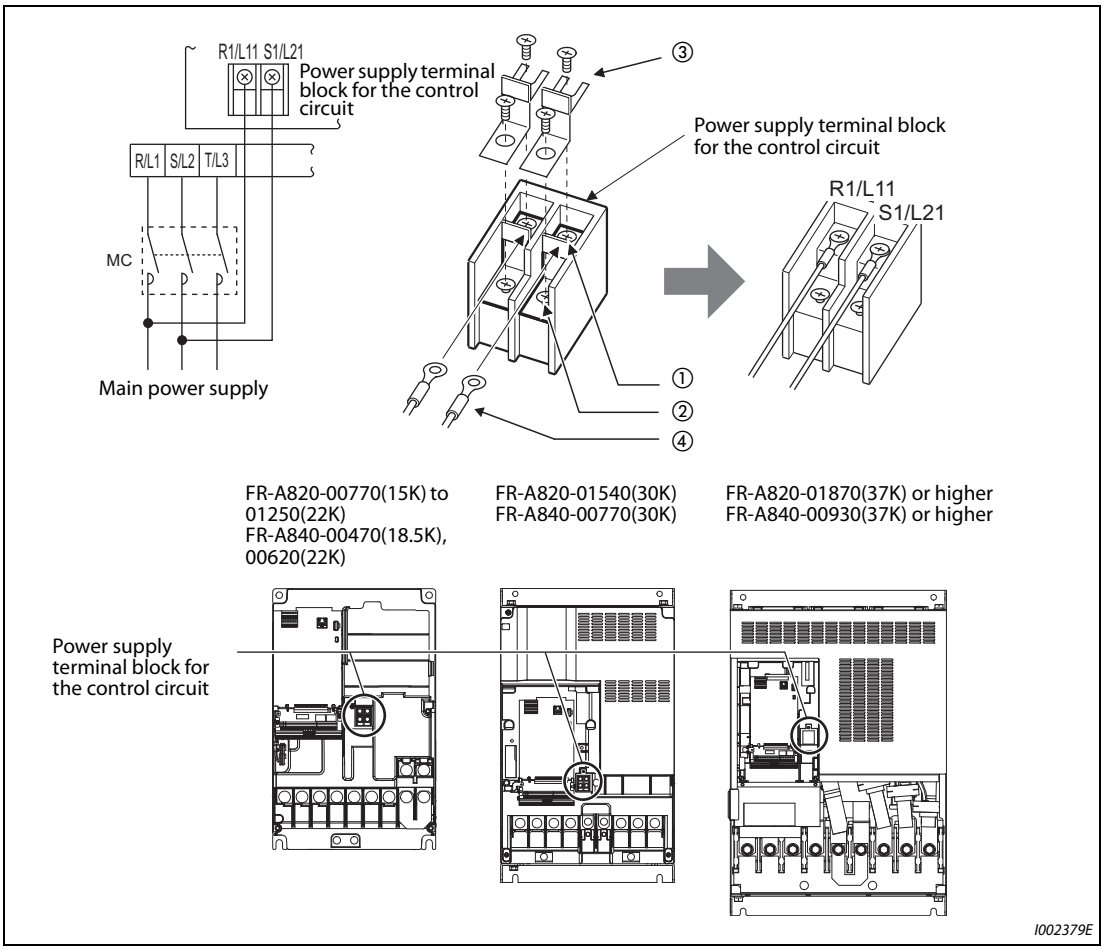


***Fig. 2-38:*** *Detailed view and positions of the terminals*

**NOTES**

When using separate power supplies, always remove the jumpers across terminals R/L1 and R1/L11 and across S/L2 and S1/L21. The inverter may be damaged if the jumpers are not removed.

The voltage should be the same as that of the main control circuit when the control circuit power is supplied from other than the input side of the MC.

The power capacity necessary when separate power is supplied from R1/L11 and S1/L21 differs according to the inverter capacity.

| Inverter | Power supply capacity |
|---|---|
| FR-A820-00630(11K) or lower<br>FR-A840-00380(15K) or lower | 60 VA |
| FR-A820-00770(15K) or higher<br>FR-A840-00470(18.5K) or higher | 80 VA |

If the main circuit power is switched OFF (for 0.1 s or more) then ON again, the inverter is reset and a fault output will not be held.

## 2.6.6 When supplying 24 V external power to the control circuit

Connect the 24 V external power supply across terminals +24 and SD. The 24 V external power supply enables I/O terminal ON/OFF operation, operation panel displays, control functions, and communication during communication operation even at power-OFF of inverter's main circuit power supply. When the main circuit power supply is turned ON, the power supply source changes from the 24 V external power supply to the main circuit power supply.

### Specification of the applicable 24 V external power supply

| Item | Rated specification |
|---|---|
| Input voltage | 23 to 25.5 V DC |
| Input current | 1.4 A or less |

***Tab. 2-19:*** *Specification of the applicable 24 V external power supply*

| Model | Manufacturer |
|---|---|
| S8JX-N05024C ①<br>Specifications: Capacity 50 W, output voltage (DC) 24 V, output current 2.1 A<br>Installation method: Front installation with cover<br><br>or<br><br>S8VS-06024 ①<br>Specifications: Capacity 60 W, output voltage (DC) 24 V, output current 2.5 A<br>Installation method: DIN rail installation | OMRON Corporation |

***Tab. 2-20:*** *Commercially available products (as of October 2013)*

① For the latest information about OMRON power supply, contact OMRON corporation.

### Starting and stopping the 24 V external power supply operation

- Supplying 24 V external power while the main circuit power is OFF starts the 24 V external power supply operation. Likewise, turning OFF the main circuit power while supplying 24 V external power starts the 24 V external power supply operation.
- Turning ON the main circuit power stops the 24 V external power supply operation and enables the normal operation.

**NOTES**

When the 24 V external power is supplied while the main circuit power supply is OFF, the inverter operation is disabled.

In the initial setting, when the main power supply is turned ON during the 24 V external power supply operation, a reset is performed in the inverter, then the power supply changes to the main circuit power supply. (The reset can be disabled using Pr. 30, refer to page 5-652.)

**Confirming the 24 V external power supply input**

- During the 24 V external power supply operation, "EV" flickers on the operation panel. The alarm lamp also flickers. Thus, the 24 V external power supply operation can be confirmed even when the operation panel is removed.

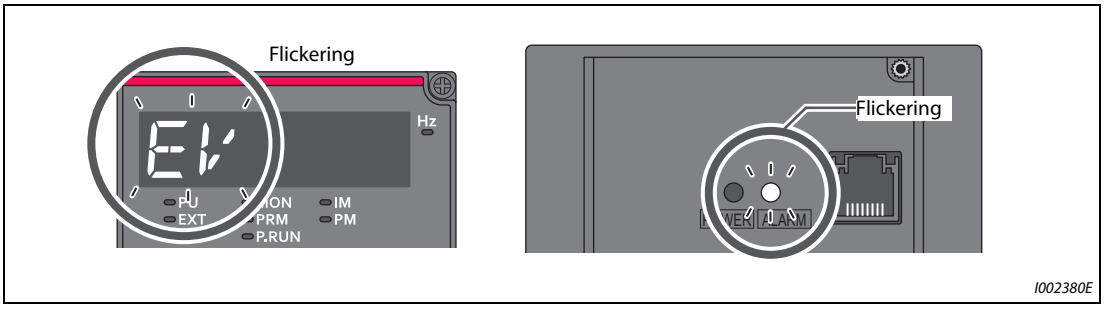


***Fig. 2-39:*** *Confirming the 24 V external power supply input*

- During the 24 V external power supply operation, the 24 V external power supply operation signal (EV) is output. To use the EV signal, set "68" (positive logic) or "168" (negative logic) in one of Pr. 190 to Pr. 196 (output terminal function selection) to assign function to an output terminal.

**Operation while the 24 V external power is supplied**

- Faults history and parameters can be read and parameters can be written (when the parameter write from the operation panel is enabled) using the operation panel keys.
- The safety stop function is invalid during the 24 V external power supply operation.
- During the 24 V external power supply operation, monitored items and signals related to inputs to main circuit power supply, such as output current, converter output voltage, and IPF signal, are invalid.
- The faults, which have occurred when the main circuit power supply is ON, continue to be output after the power supply is changed to the 24 V external power supply. Perform the inverter reset or turn OFF then ON the power to reset the faults.
- The retry function is invalid for all faults during the 24 V external power supply.
- If the power supply changes from the main circuit power supply to the 24 V external power supply while measuring the main circuit capacitor's life, the measurement completes after the power supply changes back to the main circuit power supply (Pr. 259 = "3").
- The output data is retained when "1 or 11" is set in Pr. 495 "Remote output selection".

**NOTES**

Inrush current equal to or higher than the 24 V external power supply specification may flow at power-ON. Confirm that the power supply and other devices are not affected by the inrush current and the voltage drop caused by it. Depending on the power supply, the inrush current protection may be activated to disable the power supply. Select the power supply and capacity carefully.

When the wiring length between the external power supply and the inverter is long, the voltage often drops. Select the appropriate wiring size and length to keep the voltage in the rated input voltage range.

In a serial connection of several inverters, the current increases when it flows through the inverter wiring near the power supply. The increase of the current causes voltage to drop further. When connecting different inverters to different power supplies, use the inverters after confirming that the input voltage of each inverter is within the rated input voltage range. Depending on the power supply, the inrush current protection may be activated to disable the power supply. Select the power supply and capacity carefully.

"E.SAF or E.P24" may appear when the start-up time of the 24 V power supply is too long (less than 1.5 V/s) in the 24 V external power supply operation.

"E.P24" may appear when the 24 V external power supply input voltage is low. Check the external power supply input.

Do not touch the control circuit terminal block (circuit board) during the 24 V power supply operation (when conducted). Otherwise you may get an electric shock or burn.

## 2.6.7 Safety stop function

### Function description

The terminals related to the safety stop function are shown below.

| Terminal symbol | Terminal function description | |
|---|---|---|
| S1 ① | For input of the safety stop channel 1. | Between S1 and SIC, S2 and SIC<br>Open: In safety stop mode<br>Short: Other than the safety stop mode. |
| S2 ① | For input of the safety stop channel 2. | |
| SIC ① | Common terminal for S1 and S2. | |
| SO | Outputs when an alarm or failure is detected.<br>The signal is output when no internal safety circuit failure ② exists. | OFF: Internal safety circuit failure ②<br>ON: No internal safety circuit failure ② |
| SOC | Open collector output (terminal SO) common | |

***Tab. 2-21:*** *Safety stop signal*

① In the initial status, terminals S1 and PC, S2 and PC, and SIC and SD are respectively shorted with shorting wires. To use the safety stop function, remove all the shortening wires, and then connect to the safety relay module as shown in the following connection diagram.

② At an internal safety circuit failure, the operation panel displays one of the faults shown on page 2-56.

**NOTE**

Use the terminal SO to output a fault and to prevent restarting of the inverter. The signal cannot be used as safety stop input terminal to other devices.

### Connection diagram

To prevent automatic restart after a fault occurrence, connect the reset button of a safety relay module or a safety programmable controller across the terminals SO and SOC. The reset button acts as the feedback input for the safety relay module or the safety programmable controller.

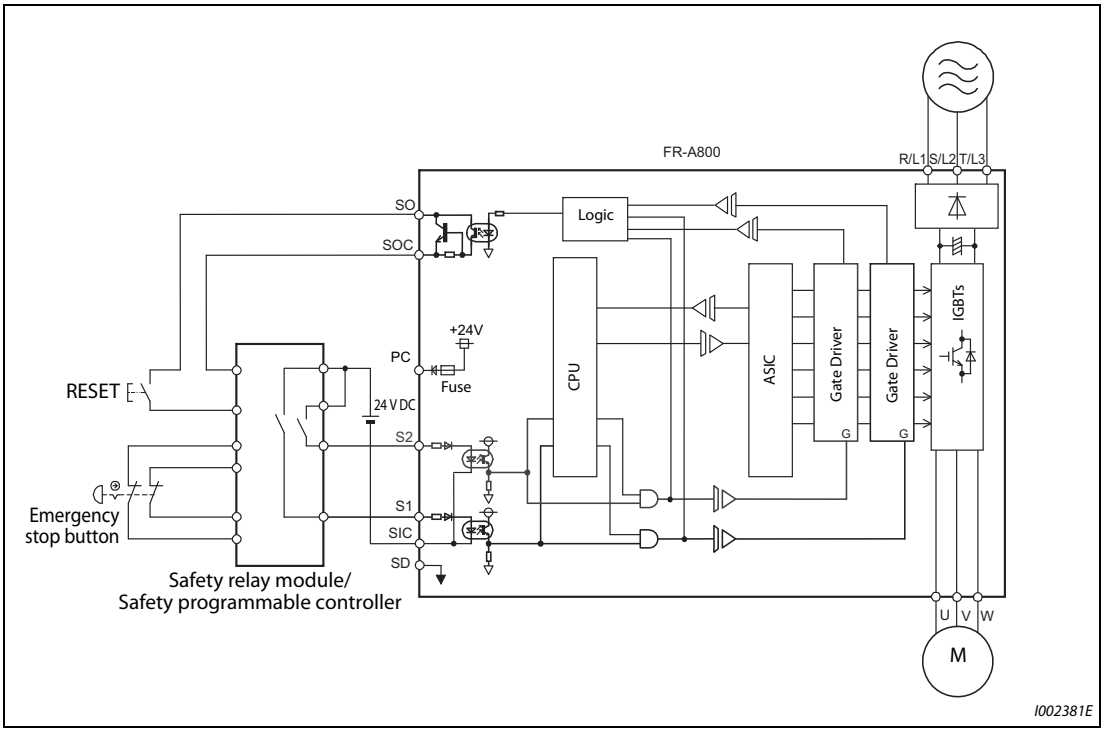


***Fig. 2-40:*** *Connecting the Safety relay module*

### Safety stop function operation

| Input power | Input signal | | Internal safety circuit failure ① | Output signal | Inverter running status |
|---|---|---|---|---|---|
| | S1-SIC | S2-SIC | | SO ③ | |
| OFF | — | — | — | OFF | Output shutoff (Safe state) |
| ON | Short | Short | Without | ON | Drive enabled |
| | | | With | OFF | Output shutoff (Safe state) |
| | Open | Open | Without ② | ON | Output shutoff (Safe state) |
| | | | With | OFF | Output shutoff (Safe state) |
| | Short | Open | N/A ④ | OFF | Output shutoff (Safe state) |
| | Open | Short | N/A ④ | OFF | Output shutoff (Safe state) |

***Tab. 2-22:*** *Description of Safety stop function operation*

① At an internal safety circuit failure, the operation panel displays one of the faults shown in "Internal safety circuit failure".

② SA is displayed when both of the S1 and S2 signal ①s are in open status and no internal safety circuit failure exists.

③ ON: Transistor used for an open collector output is conducted.
OFF: Transistor used for an open collector output is not conducted.

④ N/A denotes a condition where circuit fault does not apply.

**Internal safety circuit failure**

At an internal safety circuit failure, the terminal SO turns OFF.

The following faults can cause the internal safety circuit failure (terminal SO = OFF).

| Fault record | Operation panel indication |
|---|---|
| Option fault | E.OPT |
| Communication option fault | E.OP1 |
| Parameter storage device fault | E.PE |
| Retry count excess | E.RET |
| Parameter storage device fault | E.PE2 |
| Operation panel power supply short circuit/ RS-485 terminal power supply short circuit | E.CTE |
| 24 V DC power fault | E.P24 |
| Safety circuit fault | E.SAF |
| Overspeed occurrence | E.OS |

| Fault record | Operation panel indication |
|---|---|
| Speed deviation excess detection | E.OSD |
| Signal loss detection | E.ECT |
| Excessive position fault | E.OD |
| Brake sequence fault | E.MB1 to E.MB7 |
| Encoder phase fault | E.EP |
| CPU fault | E.CPU |
| | E.5 to E.7 |
| Internal circuit fault | E.13 |

***Tab. 2-23:*** *Indication of internal safety circuit failures*

For more details, refer to the Safety stop function instruction manual (BCN-A23228-001).
(Find a PDF copy of this manual in the CD-ROM enclosed with the product.

# 2.7 Communication connectors and terminals

## 2.7.1 PU connector

### Mounting the operation panel (FR-DU08) or parameter unit (FR-PU07) on the enclosure surface

Having an operation panel (FR-DU08) or a parameter unit (FR-PU07) on the enclosure surface is convenient. With a connection cable, the operation panel (FR-DU08) or the parameter unit (FR-PU07) can be mounted to the enclosure surface and connected to the inverter.
Use the option FR-CB2□, or connectors and cables available on the market.
(To mount the operation panel (FR-DU08), the optional connector (FR-ADP) is required.)
Securely insert one end of the connection cable until the stoppers are fixed.

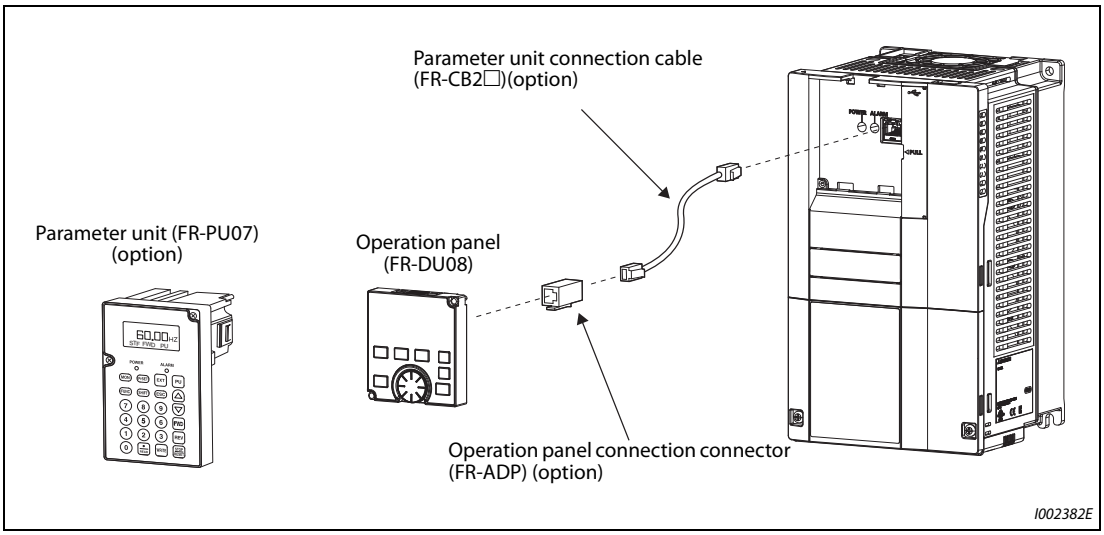


***Fig. 2-41:*** *Connecting a parameter unit or the operation panel using a connection cable*

**NOTES**

Refer to the following table when fabricating the cable on the user side. Keep the total cable length within 20 m.

Commercially available products (as of February 2012)

| Name | Model | Manufacturer |
|---|---|---|
| Communication cable | SGLPEV-T (Cat5e/300 m) 24AWG × 4P | Mitsubishi Cable Industries, Ltd. |
| RJ-45 connector | 5-554720-3 | Tyco Electronics |

### Communication operation

Using the PU connector enables communication operation from a personal computer, etc. When the PU connector is connected with a personal, FA or other computer by a communication cable, a user program can run to monitor the inverter or read and write parameters.
Communication can be performed with the Mitsubishi inverter protocol (computer link operation).
For the details, refer to page 5-577.

## 2.7.2 USB connector

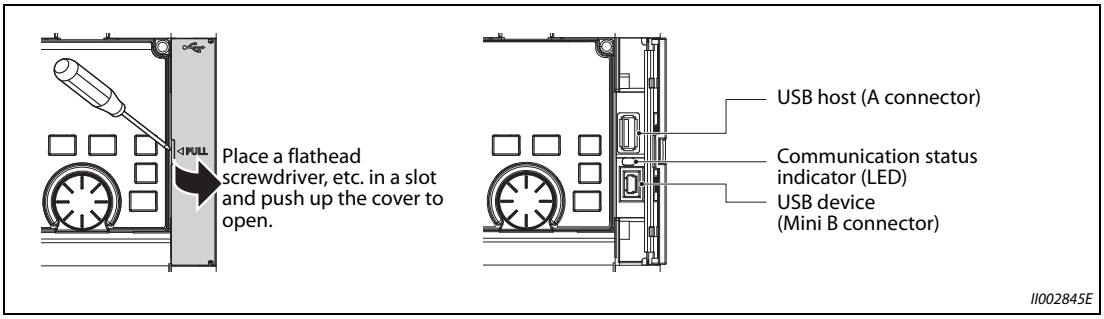


***Fig. 2-42:*** *USB connector*

### USB host communication

| Specification | | Description |
|---|---|---|
| Interface | | Conforms to USB1.1 |
| Transmission speed | | 12 Mbps |
| Wiring length | | Maximum 5 m |
| Connector | | USB A connector (receptacle) |
| Compatible USB memory | Format | FAT32 |
| | Capacity | 1 GB or more (used in the recorder mode of the trace function) |
| | Encryption function | Not available |

***Tab. 2-24:*** *USB connector specification*

- Different inverter data can be saved in a USB memory device.
  The USB host communication enables the following functions.

| Function | Description | Refer to page |
|---|---|---|
| Parameter copy | • Copies the parameter setting from the inverter to the USB memory device. The maximum of 99 parameter setting files can be saved in a USB memory device.<br>• The parameter setting data copied in the USB memory device can be copied to other inverters. This function is useful in backing up the parameter setting or for sharing the parameter setting among multiple inverters.<br>• The parameter setting file can be copied onto a personal computer from the USB memory device and edited using FR Configurator2. | 5-680 |
| Trace | • The monitored data and output status of the signals can be saved in a USB memory device.<br>• The saved data can be imported to FR Configurator2 to diagnose the operating status of the inverter. | 5-568 |
| PLC function data copy | • This function copies the PLC function project data to a USB memory device when the PLC function is used.<br>• The PLC function project data copied in the USB memory device can be copied to other inverters.<br>• This function is useful in backing up the parameter setting and for allowing multiple inverters to operate by the same sequence programs. | 5-564 |

***Tab. 2-25:*** *Functions enabled via the USB host communication*

- When the inverter recognizes the USB memory device without any problem, "USB.–A" is briefly displayed on the operation panel.
- When the USB memory device is removed, "USB.–" is briefly displayed on the operation panel.

- The operating status of the USB host can be checked on the LED display of the inverter.

| LED display status | Operating status |
|---|---|
| OFF | No USB connection. |
| ON | The communication is established between the inverter and the USB device. |
| Flickering rapidly | The USB memory device is being accessed. (Do not remove the USB memory device.) |
| Flickering slowly | Error in the USB connection. |

***Tab. 2-26:*** *Operating status of the USB host*

- When a device such as a USB battery charger is connected to the USB connector and an excessive current (500 mA or more) flows, USB host error "UF" (UF warning) is displayed on the operation panel.
- When the UF warning appears, the USB error can be cancelled by removing the USB device and setting Pr. 1049 = "1". (The UF warning can also be cancelled by resetting the inverter power or resetting with the RES signal.)

**NOTES**

Do not connect devices other than a USB memory device to the inverter.

If a USB device is connected to the inverter via a USB hub, the inverter cannot recognize the USB memory device properly.

**USB device communication**

The inverter can be connected to a personal computer with a USB (Ver. 1.1) cable.

Parameter setting and monitoring can be performed by FR Configurator2.

| Specification | Description |
|---|---|
| Interface | Conforms to USB1.1 |
| Transmission speed | 12 Mbps |
| Wiring length | Maximum 5 m |
| Connector | USB mini B connector (receptacle) |
| Power supply | Self-powered |

***Tab. 2-27:*** *USB device communication*

**NOTE**

For the details of FR Configurator2, refer to the Instruction Manual of FR Configurator2.

## 2.7.3 RS-485 terminal block

### Communication operation

| Item | Specification |
|---|---|
| Conforming standard | EIA-485 (RS-485) |
| Transmission format | Multidrop link |
| Communication speed | maximum 115200 bps |
| Overall length | 500 m |
| Connection cable | Twisted pair cable (4 pairs) |

***Tab. 2-28:*** *Specifications of the RS-485 terminal block*

The RS-485 terminals enable communication operation from a personal computer, etc. When the PU connector is connected with a personal, FA or other computer by a communication cable, a user program can run to monitor the inverter or read and write parameters.

Communication can be performed with the Mitsubishi inverter protocol (computer link operation) and Modbus-RTU protocol.

For the details, refer to page 5-579.

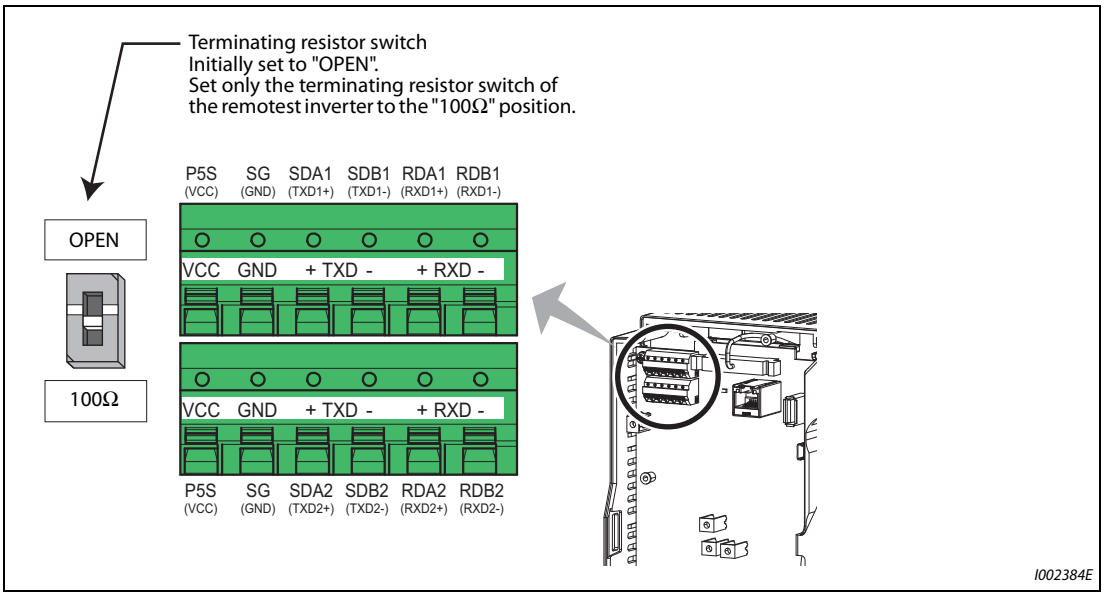


***Fig. 2-43:*** *RS-485 terminal block*

# 2.8 Connection of motor with encoder (vector control)

Using an encoder-equipped motor together with the plug-in option FR-A8AP enables speed, torque, and positioning control operations under orientation control, encoder feedback control, and full-scale vector control.

### Appearance and parts name of FR-A8AP

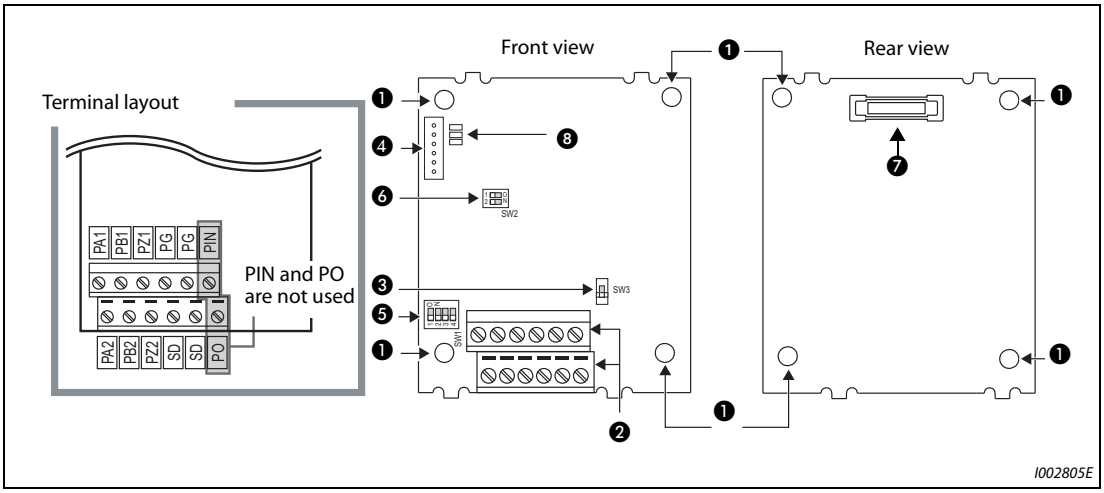


***Fig. 2-44:*** *Description of the option FR-A8AP*

| Symbol | Name | Description | Refer to page |
|---|---|---|---|
| ❶ | Mounting hole | Used for installation to the inverter. | — |
| ❷ | Terminal block | Connected with the encoder. | 2-67 |
| ❸ | Encoder type selection switch (SW3) | Switches the encoder type (differential line driver/complementary). | 2-64 |
| ❹ | CON2 connector | Not used. | — |
| ❺ | Terminating resistor selection switch (SW1) | Switches ON or OFF the internal terminating resistor. | 2-64 |
| ❻ | Switch for manufacturer setting (SW2) | Do not change from the initially-set status. (Switches 1 and 2 are OFF .) | — |
| ❼ | Connector | Connected to the option connector of the inverter. | 1-3 |
| ❽ | LED for manufacturer check | Not used. | — |

***Tab. 2-29:*** *Parts of the option FR-A8AP*

### Terminals of the FR-A8AP

| Terminal symbol | Terminal name | Description |
|---|---|---|
| PA1 | Encoder A-phase signal input terminal | A-, B- and Z-phase signals are input from the encoder. |
| PA2 | Encoder A-phase inverse signal input terminal | |
| PB1 | Encoder B-phase signal input terminal | |
| PB2 | Encoder B-phase inverse signal input terminal | |
| PZ1 | Encoder Z-phase signal input terminal | |
| PZ2 | Encoder Z-phase inverse signal input terminal | |
| PG | Encoder power supply (positive side) input terminal | Input terminal for the encoder power supply. Connect the external power supply (5 V, 12 V, 15 V, 24 V) and the encoder power cable. When the encoder output is the differential line driver type, only 5 V can be input. Make the voltage of the external power supply same as the encoder output voltage. (Check the encoder specification.) |
| SD | Encoder power supply ground terminal | |
| PIN | Not used. | |
| PO | | |

***Tab. 2-30:*** *Terminals of the FR-A8AP*

**NOTES**

When the encoder's output voltage differs from its input power supply voltage, the signal loss detection (E.ECT) may occur.

Incorrect wiring or faulty setting to the encoder will cause a fault such as an overcurrent (E.OC□) and an inverter overload (E.THT).
Correctly perform wiring and setting to the encoder.

**Switches of the FR-A8AP**

- Encoder type selection switch (SW3)
  Selects either the differential line driver or complementary setting.
  It is initially set to the differential line driver. Switch its position according to the output circuit.

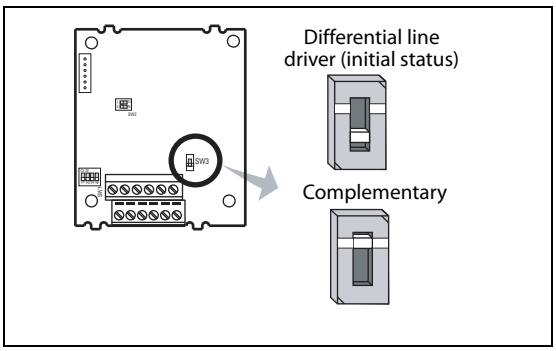


***Fig. 2-45:***
*Encoder specification selection switch*

I002386E

- Terminating resistor selection switch (SW1)
  Selects ON/OFF of the internal terminating resistor.
  Set the switch to ON (initial status) when an encoder output type is differential line driver, and set to OFF when complementary.
  ON: with internal terminating resistor (initial status)
  OFF: without internal terminating resistor

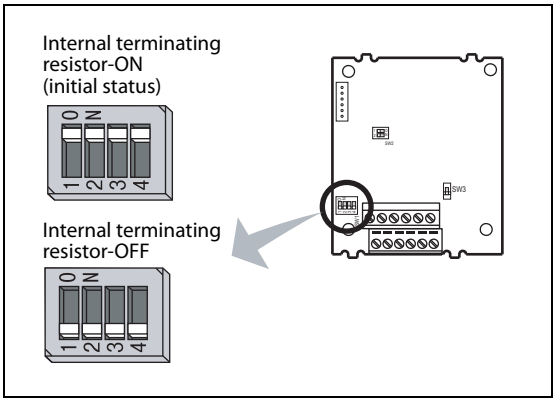


***Fig. 2-46:***
*Terminating resistor selection switch*

I002387E

**NOTES**

Set all switches to the same setting (ON/OFF).

Set the switch "OFF" when sharing an encoder with another unit (NC (computerized numerical controller), etc.) having a terminating resistor under the differential line driver setting.

● Motor and switch setting

| Motor | | Encoder type selection switch (SW3) | Terminating resistor selection switch (SW1) | Power supply specification ② |
|---|---|---|---|---|
| Mitsubishi standard motor with encoder<br>Mitsubishi high-efficiency motor with encoder | SF-JR | Differential | ON | 5 V |
| | SF-HR | Differential | ON | 5 V |
| | Other | ① | ① | ① |
| Mitsubishi constant-torque motor with encoder | SF-JRCA | Differential | ON | 5 V |
| | SF-HRCA | Differential | ON | 5 V |
| | Other | ① | ① | ① |
| Vector control dedicated motor | SF-V5RU | Complementary | OFF | 12 V |
| Other manufacturer's motor with encoder | | ① | ① | ① |

***Tab. 2-31:*** *Motor used and switch setting*

① Set according to the motor (encoder).

② Prepare an encoder's power supply (5 V/12 V/15 V/24 V) according to the encoder's output voltage. When the encoder output is the differential line driver type, only 5 V can be input.

**NOTE** The SW2 switch is for manufacturer setting. Do not change the setting.

● Encoder specification

| Item | Encoder for SF-JR | Encoder for SF-V5RU |
|---|---|---|
| Resolution | 1024 pulses/rev | 2048 pulses/rev |
| Power supply voltage | 5 V DC ±10% | 12 V DC ±10% |
| Current consumption | 150 mA | 150 mA |
| Output signal form | A, B phases (90° phase shift)<br>Z phase: 1 pulse/rev | A, B phases (90° phase shift)<br>Z phase: 1 pulse/rev |
| Output circuit | Differential line driver 74LS113 equivalent | Complementary |
| Output voltage | H level: 2.4 V or more<br>L level: 0.5 V or less | H level: (Power supply for encoder-3V) or more<br>L level: 3 V or less |

***Tab. 2-32:*** *Encoder specification*

### Encoder cable

**SF-JR/HR/JRCA/HRCA with encoder**

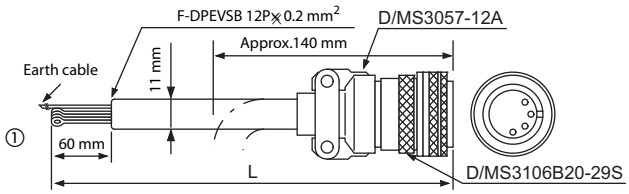


| Model | Length L (m) |
|---|---|
| FR-JCBL5 | 5 |
| FR-JCBL15 | 15 |
| FR-JCBL30 | 30 |

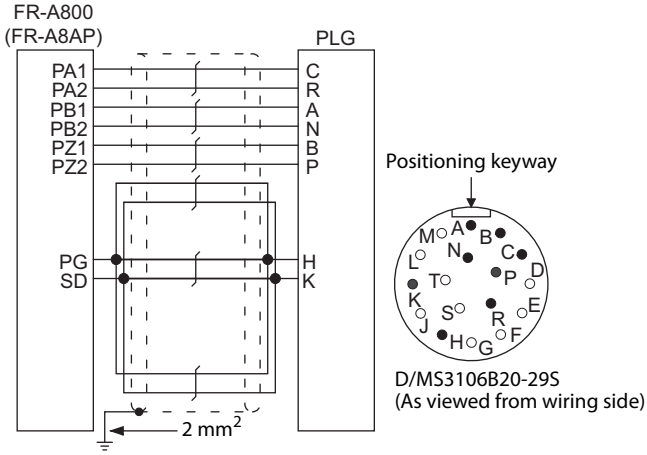


I002388E_B, I002389E

**SF-V5RU, SF-THY**

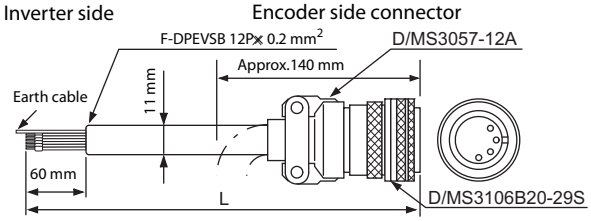


* A P clip for earthing (grounding) a shielded cable is provided.

| Model | Length L (m) |
|---|---|
| FR-V7CBL5 | 5 |
| FR-V7CBL15 | 15 |
| FR-V7CBL30 | 30 |

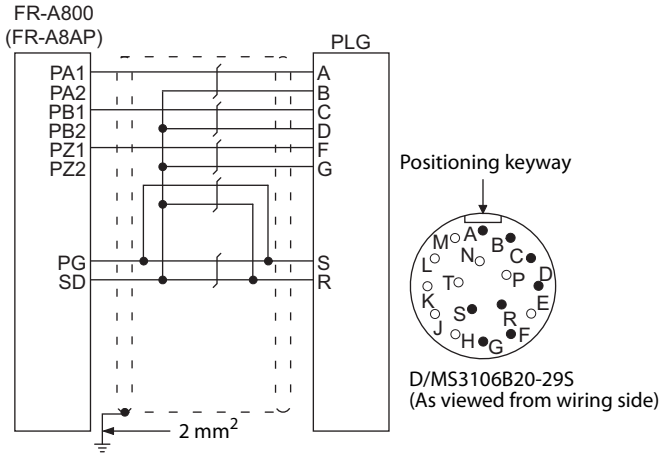


I002390E_B, I002391E

***Tab. 2-33:*** *Motors with encoder*

① As the terminal block of the FR-A8AP is an insertion type, cables need to be treated. (Refer to the following description.)

- When using an encoder cable (FR-JCBL, FR-V5CBL, etc.) dedicated to the conventional motor, cut the crimping terminal of the encoder cable and strip its sheath to make its cable wires loose. Also, treat the shielding wires of the shielded twisted pair cable to ensure that they will not contact conductive areas.
  Wire the stripped cable after twisting it to prevent it from becoming loose. In addition, do not solder it.

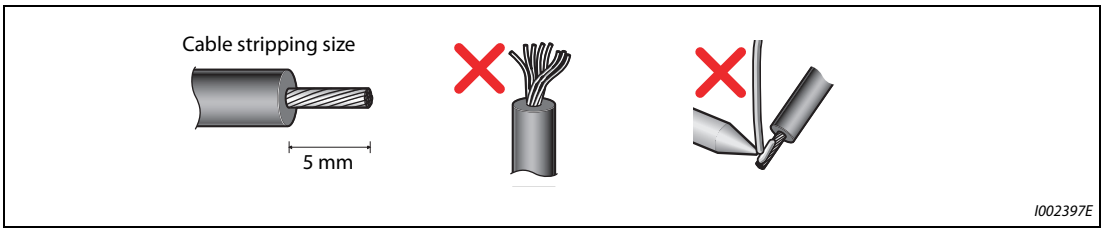


***Fig. 2-47:*** *Preparation of the cable*

**NOTES**

Information on blade terminals
Commercially available products (as of February 2012)

- Phoenix Contact Co., Ltd.

| Terminal screw size | Cable gauge ($mm^2$) | Blade terminal model | | Crimping tool name |
|---|---|---|---|---|
| | | With insulation sleeve | Without insulation sleeve | |
| M2 | 0.3, 0.5 | AI 0,5-6WH | A 0,5-6 | CRIMPFOX 6 |

- NICHIFU Co.,Ltd.

| Terminal screw size | Cable gauge ($mm^2$) | Blade terminal product number | Insulation product number | Crimping tool product number |
|---|---|---|---|---|
| M2 | 0.3 to 0.75 | BT 0.75-7 | VC 0.75 | NH 69 |

When using a blade terminal (without insulation sleeve), take caution that the twisted wires do not come out.

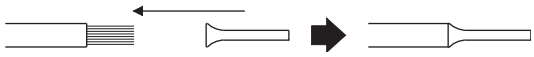

- Connection terminal compatibility table

| Motor | | SF-V5RU, SF-THY | SF-JR/HR/JRCA/HRCA (with encoder) |
|---|---|---|---|
| **Encoder cable** | | **FR-V7CBL** | **FR-JCBL** |
| FR-A8AP terminal | PA1 | PA | PA |
| | PA2 | Do not connect anything to this. | PAR |
| | PB1 | PB | PB |
| | PB2 | Do not connect anything to this. | PBR |
| | PZ1 | PZ | PZ |
| | PZ2 | Do not connect anything to this. | PZR |
| | PG | PG | 5E |
| | SD | SD | AG2 |

***Tab. 2-34:*** *Connection terminal compatibility table*

### Wiring example

- Speed control

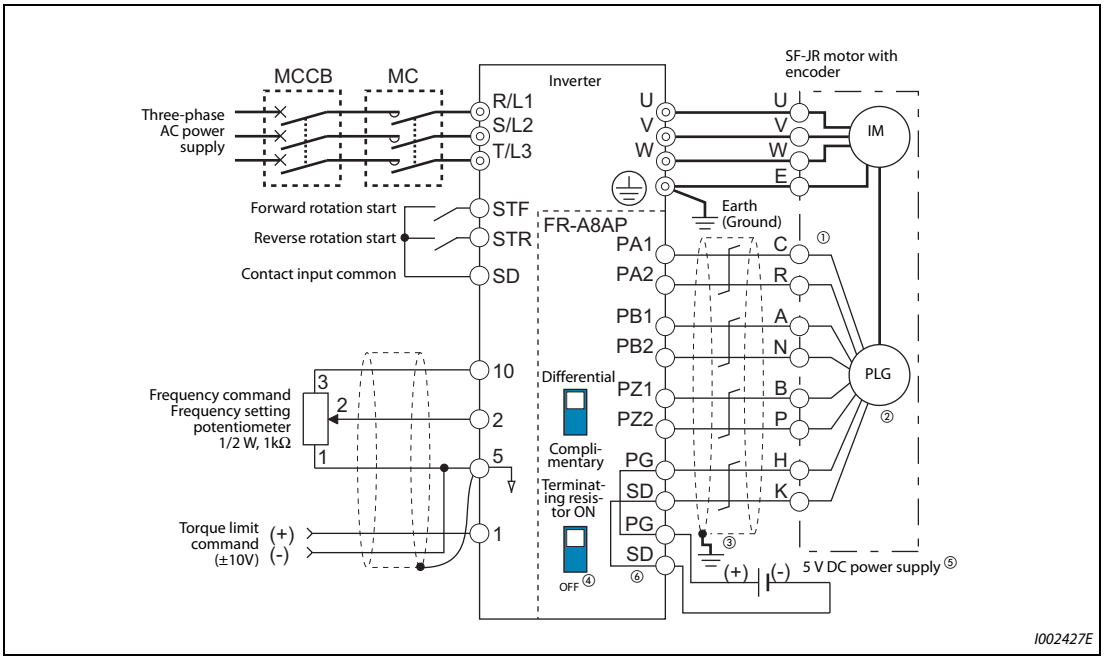


***Fig. 2-48:*** *Standard motor with encoder (SF-JR), 5 V differential line driver*

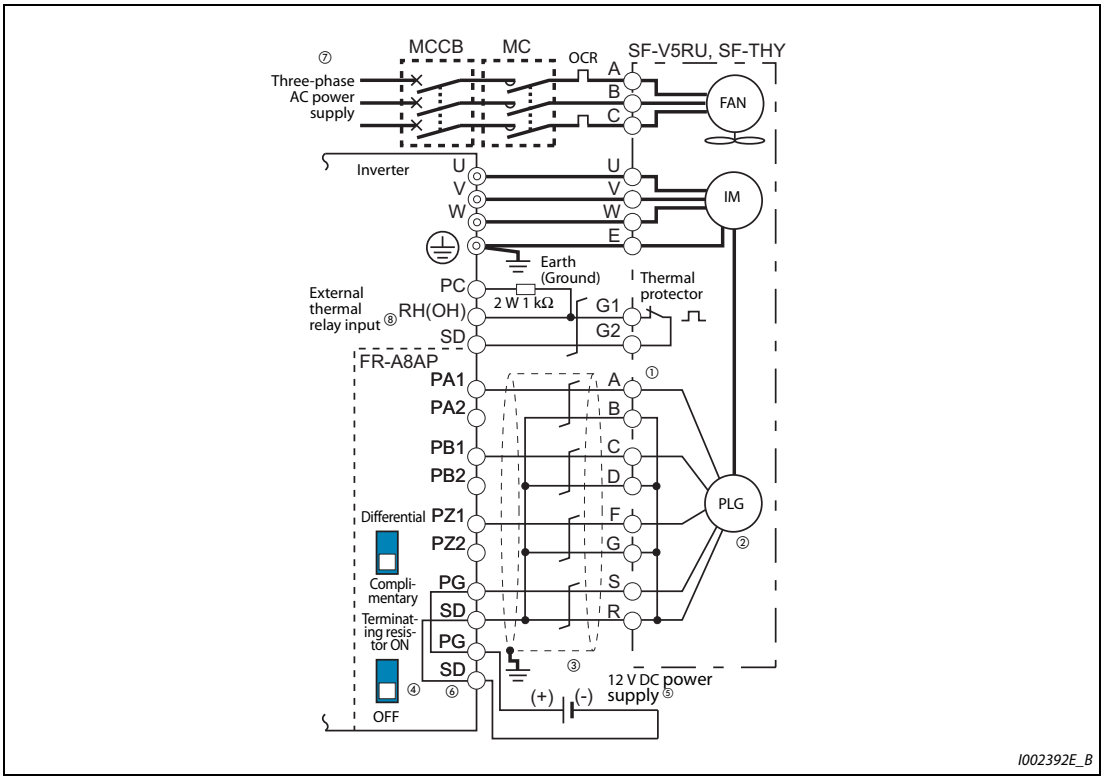


***Fig. 2-49:*** *Vector control dedicated motor (SF-V5RU, SF-THY), 12 V complementary*

● Torque control

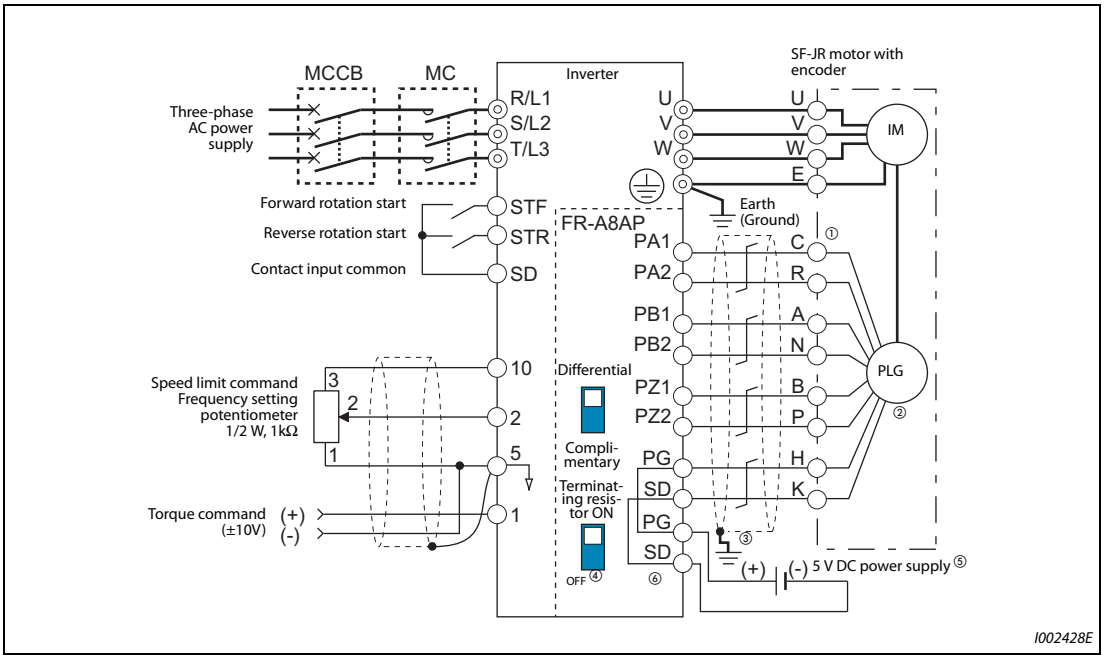


***Fig. 2-50:*** *Standard motor with encoder (SF-JR), 5 V differential line driver*

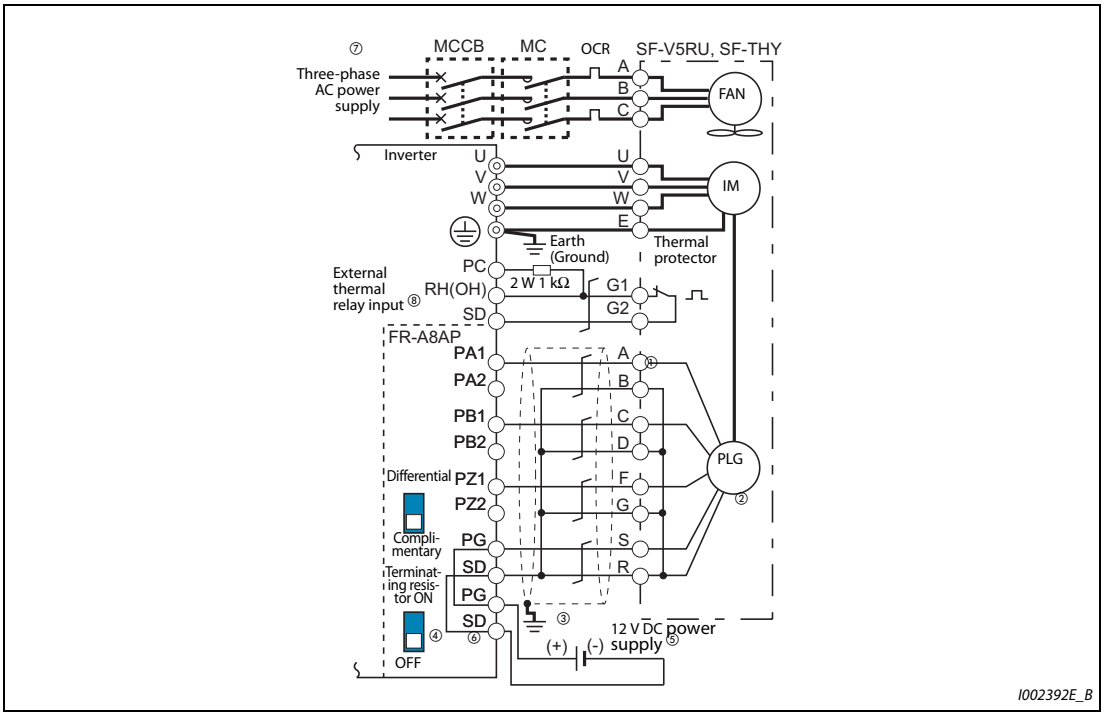


***Fig. 2-51:*** *Vector control dedicated motor (SF-V5RU, SF-THY), 12 V complementary*

● Position control

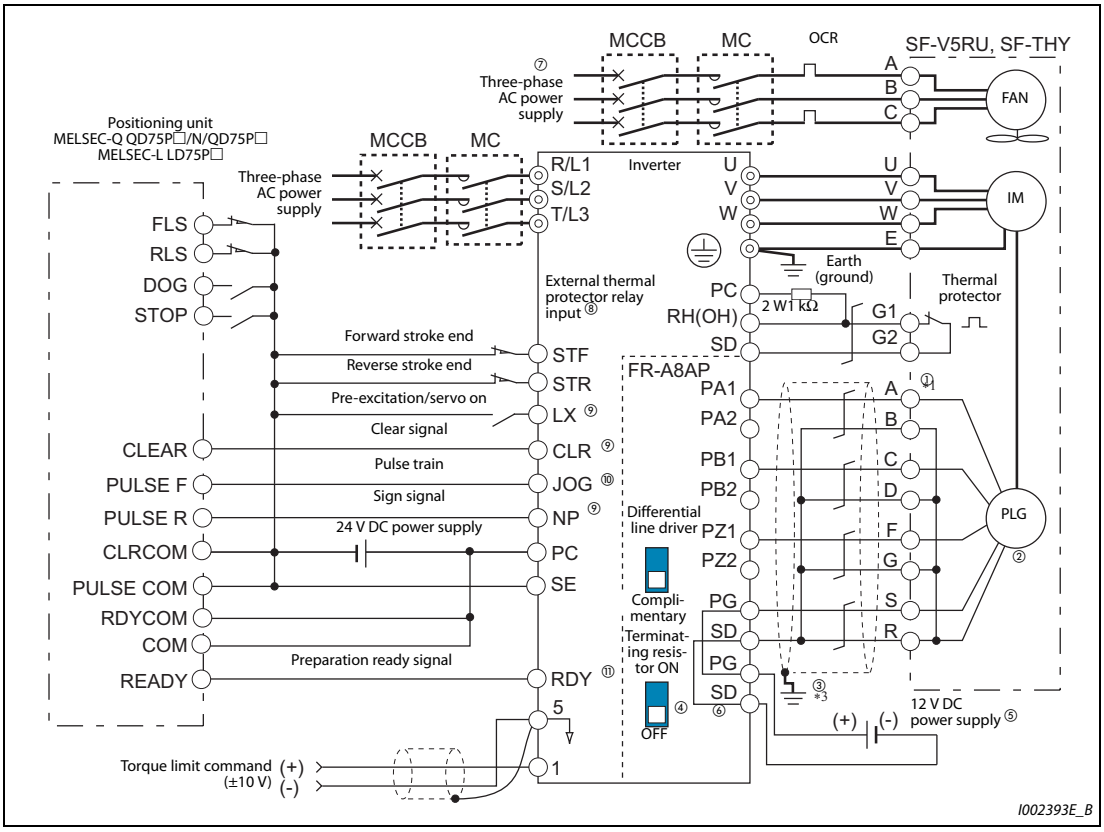


***Fig. 2-52:*** *Vector control dedicated motor (SF-V5RU, SF-THY), 12 V complementary*

① The pin number differs according to the encoder used.
Speed, control, torque control, and position control by pulse train input are available with or without the Z-phase being connected.

② Connect the encoder so that there is no looseness between the motor and motor shaft. Speed ratio must be 1:1.

③ Earth (ground) the shield of the encoder cable to the enclosure using a tool such as a P-clip.
(Refer to page 2-66.)

④ For the complementary, set the terminating resistor selection switch to OFF position.
(Refer to page 2-58.)

⑤ A separate power supply of 5 V/12 V/15 V/24 V is necessary according to the encoder power specification.
When the encoder output is the differential line driver type, only 5 V can be input.
Make the voltage of the external power supply the same as the encoder output voltage, and connect the external power supply across PG and SD.

⑥ For terminal compatibility of the FR-JCBL, FR-V7CBL, and FR-A8AP, refer to page 2-67.

⑦ For the fan of the 7.5 kW or lower dedicated motor, the power supply is single phase.
(200 V/50 Hz, 200 to 230 V/60 Hz)

⑧ Connect the recommended 2 W, 1 kΩ resistor between the terminal PC and OH.
(Recommended product: MOS2C102J 2W1kΩ by KOA Corporation)
Insert the input line and the resistor to a 2-wire blade terminal, and connect the blade terminal to the terminal OH. (For the recommended 2-wire blade terminals, refer to page 2-44.)
Insulate the lead wire of the resistor, for example by applying a contraction tube, and shape the wires so that the resistor and its lead wire will not touch other cables. Caulk the lead wire securely together with the thermal protector input line using a 2-wire blade terminal. (Do not subject the lead wire's bottom area to an excessive pressure.)

To use a terminal as the terminal OH, assign the OH (external thermal O/L relay input) signal to an input terminal. (Set "7" in any of Pr. 178 to Pr. 189. For details, refer to page 5-409.)

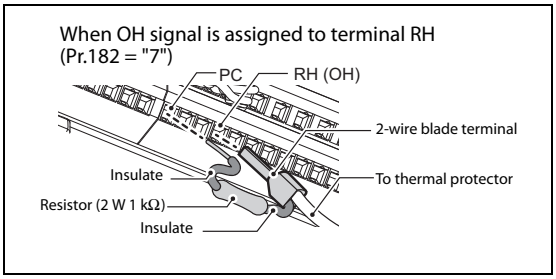


***Fig. 2-53:***
*Connection of the resistor*

⑨ Assign the function using Pr. 178 to Pr. 184, Pr. 187 to Pr. 189 (input terminal function selection).

⑩ When position control is selected, terminal JOG function is invalid and simple position pulse train input terminal becomes valid.

⑪ Assign the function using Pr. 190 to Pr. 194 (output terminal function selection).

**Instructions for encoder cable wiring**

- Use shielded twisted pair cables (0.2 $mm^2$ or larger) to connect the FR-A8AP. For the wiring to the terminals PG and SD, use several cables in parallel or use a thick cable, according to the wiring length.
  To protect the cables from noise, run them away from any source of noise (such as the main circuit and power supply voltage).

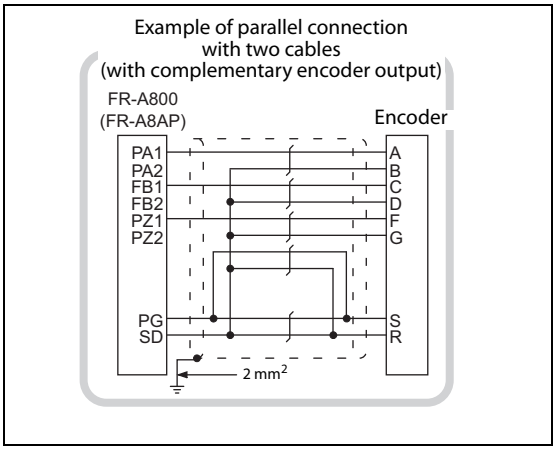


***Fig. 2-54:***
*Example of parallel connection with two cables*

| Wiring length | Parallel connection | | Larger-size cable |
|---|---|---|---|
| ≤ 10 m | At least two cables in parallel | Cable gauge 0.2 $mm^2$ | ≥ 0.4 $mm^2$ |
| ≤ 20 m | At least four cables in parallel | | ≥ 0.75 $mm^2$ |
| ≤ 100 m ① | At least six cables in parallel | | ≥ 1.25 $mm^2$ |

***Tab. 2-35:*** *Cable gauges and number of parallel cables*

① When differential line driver is set and a wiring length is 30 m or more.
The wiring length can be extended to 100 m by increasing the 5 V power supply (approximately to 5.5 V) while using six or more 0.2 $mm^2$ gauge cables in parallel or a 1.25 $mm^2$ or larger gauge cable. The voltage applied must be within power supply specifications of encoder.

- To reduce noise of the encoder cable, earth (ground) the encoder's shielded cable to the enclosure (as close as possible to the inverter) with a P-clip or U-clip made of metal.

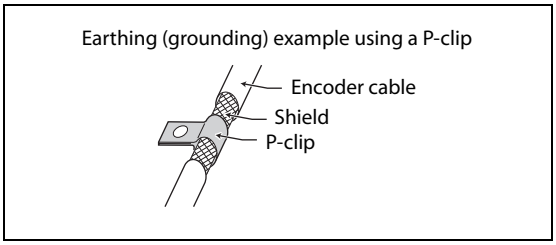


***Fig. 2-55:***
*Earthing (grounding) example using a P-clip*

I001448E

- When one encoder is shared between FR-A8AP and CNC (computerized numerical controller), its output signal should be connected as shown below. In this case, the wiring length between FR-A8AP and CNC should be as short as possible, within 5 m.

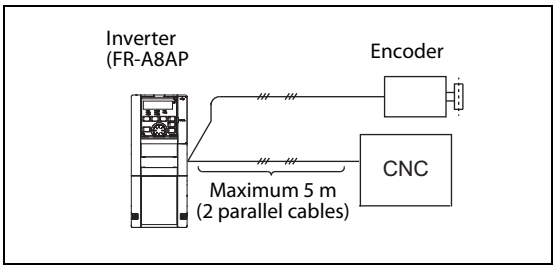


***Fig. 2-56:***
*Wiring of the encoder with inverter and CNC*

I002807E

**NOTES**

For the details of the optional encoder dedicated cable (FR-JCBL/FR-V7CBL), refer to page 2-65.

The FR-V7CBL is provided with a P-clip for earthing (grounding) shielded cables.

**Parameter for the encoder (Pr. 359, Pr. 369)**

| Pr. | Name | Initial value | Setting range | Description | |
|---|---|---|---|---|---|
| 359<br>C141 | Encoder rotation direction | 1 | 0 | Set when using a motor for which forward rotation (encoder) is clockwise (CW) viewed from the shaft. | Set for the operation at 120 Hz or less. |
| | | | 100 | | Set for the operation at a frequency higher than 120 Hz. |
| | | | 1 | Set when using a motor for which forward rotation (encoder) is counterclockwise (CCW) viewed from the shaft. | Set for the operation at 120 Hz or less. |
| | | | 101 | | Set for the operation at a frequency higher than 120 Hz. |
| 369<br>C140 | Number of encoder pulses | 1024 | 0–4096 | Set the number of encoder pulses output.<br>Set the number of pulses before it is multiplied by 4. | |

***Tab. 2-36:*** *Parameter for the encoder*

The above parameters can be set when the FR-A8AP (option) is mounted.

### Parameter settings for the motor under vector control

| Motor name | | Pr. 9 "Electronic thermal O/L relay" | Pr. 71 "Applied motor" | Pr. 80 "Motor capacity" | Pr. 81 "Number of motor poles" | Pr. 359 "Encoder rotation direction" | Pr. 369 "Number of encoder pulses" |
|---|---|---|---|---|---|---|---|
| Mitsubishi standard motor | SF-JR | Rated motor current | 0 | Motor capacity | Number of motor poles | 1 | 1024 |
| | SF-JR 4P 1.5 kW or lower | Rated motor current | 20 | Motor capacity | 4 | 1 | 1024 |
| | SF-HR | Rated motor current | 40 | Motor capacity | Number of motor poles | 1 | 1024 |
| | Others | Rated motor current | 0(3) ① | Motor capacity | Number of motor poles | ② | ② |
| Mitsubishi constant-torque motor | SF-JRCA 4P | Rated motor current | 1 | Motor capacity | 4 | 1 | 1024 |
| | SF-HRCA | Rated motor current | 50 | Motor capacity | Number of motor poles | 1 | 1024 |
| | Others | Rated motor current | 1(13) ① | Motor capacity | Number of motor poles | ② | ② |
| Vector control dedicated motor | SF-V5RU (1500 r/min series) | 0 ③ | 30 | Motor capacity | 4 | 1 | 2048 |
| | SF-V5RU (except for 1500 r/min series) | 0 ③ | 1(13) ① | Motor capacity | 4 | 1 | 2048 |
| | SF-THY | 0 ③ | 30(33) ① | Motor capacity | 4 | 1 | 2048 |
| Other manu-facturer's standard motor | — | Rated motor current | 0(3) ① | Motor capacity | Number of motor poles | ② | ② |
| Other manu-facturer's constant-torque motor | — | Rated motor current | 1(13) ① | Motor capacity | Number of motor poles | ② | ② |

***Tab. 2-37:*** *Motor for vector control and parameter setting*

Values in indicate initial values.

① Offline auto tuning is required (Refer to page 5-66.)

② Set this parameter according to the motor.

③ Use the thermal protector input provided with the motor.

When using the inverter with the SF-V5RU (1500 r/min series), refer to the table below to set Pr. 83 "Rated motor voltage" and Pr. 84 "Rated motor frequency". For the setting of the SF-V5RU1, 3, and 4, refer to page 5-426.

| Motor capacity | SF-V5RU | | | |
|---|---|---|---|---|
| | 200 V | | 400 V | |
| | Pr. 83 [V] | Pr. 84 [Hz] | Pr. 83 [V] | Pr. 84 [Hz] |
| 1.5 kW | 188 | 52 | 345 | 52 |
| 2.2 kW | 188 | 52 | 360 | 52 |
| 3.7 kW | 190 | 52 | 363 | 52 |
| 5.5 kW | 165 | 51 | 322 | 51 |
| 7.5 kW | 164 | 51 | 331 | 51 |
| 11 kW | 171 | 51 | 320 | 51 |
| 15 kW | 164 | 51 | 330 | 51 |

| Motor capacity | SF-V5RU | | | |
|---|---|---|---|---|
| | 200 V | | 400 V | |
| | Pr. 83 [V] | Pr. 84 [Hz] | Pr. 83 [V] | Pr. 84 [Hz] |
| 18.5 kW | 171 | 51 | 346 | 51 |
| 22 kW | 160 | 51 | 336 | 51 |
| 30 kW | 178 | 51 | 328 | 51 |
| 37 kW | 166 | 51 | 332 | 51 |
| 45 kW | 171 | 51 | 342 | 51 |
| 55 kW | 159 | 51 | 317 | 51 |

***Tab. 2-38:*** *Rated motor voltage and rated motor frequency (when using SF-V5RU)*

When using the inverter with the SF-V5RU1, SF-V5RU3, or SF-V5RU4, refer to the table below and to page 5-426 to set Pr. 83 "Rated motor voltage" and Pr. 84 "Rated motor frequency".

| Motor model | Pr. 83 setting[V] | | |
|---|---|---|---|
| | 200 V class | 400 V class | Pr. 84 setting [Hz] |
| SF-V5RU1-30kW or lower | 160 | 320 | 33.33 |
| SF-V5RU1-37kW | 170 | 340 | |
| SF-V5RU3-22kW or lower | 160 | 320 | |
| SF-V5RU3-30kW | 170 | 340 | |
| SF-V5RU4-3.7kW and 7.5kW | 150 | 300 | 16.67 |
| SF-V5RU4 and motors other than described above | 160 | 320 | |

***Tab. 2-39:*** *Rated motor voltage and rated motor frequency (when using SF-V5RU1, SF-V5RU3, SF-V5RU4)*

### Combination with the vector control dedicated motor

When using the inverter with a vector control dedicated motor, refer to the table below.

- Combination with the SF-V5RU and SF-THY (ND rating)

| Voltage | 200 V class | | | 400 V class | | |
|---|---|---|---|---|---|---|
| Rated speed | 1500 r/min | | | | | |
| Base frequency | 50 Hz | | | | | |
| Maximum speed | 3000 r/min | | | | | |
| Motor capacity | Motor frame number | Motor model | Inverter model FR-A820-□ | Motor frame number | Motor model | Inverter model FR-A840-□ |
| 1.5 kW | 90L | SF-V5RU1K | 00167(2.2K) | 90L | SF-V5RUH1K | 00083(2.2K) |
| 2.2 kW | 100L | SF-V5RU2K | 00250(3.7K) | 100L | SF-V5RUH2K | 00083(2.2K) |
| 3.7 kW | 112M | SF-V5RU3K | 00340(5.5K) | 112M | SF-V5RUH3K | 00126(3.7K) |
| 5.5 kW | 132S | SF-V5RU5K | 00490(7.5K) | 132S | SF-V5RUH5K | 00250(7.5K) |
| 7.5 kW | 132M | SF-V5RU7K | 00630(11K) | 132M | SF-V5RUH7K | 00310(11K) |
| 11 kW | 160M | SF-V5RU11K | 00770(15K) | 160M | SF-V5RUH11K | 00380(15K) |
| 15 kW | 160L | SF-V5RU15K | 00930(18.5K) | 160L | SF-V5RUH15K | 00470(18.5K) |
| 18.5 kW | 180M | SF-V5RU18K | 01250(22K) | 180M | SF-V5RUH18K | 00620(22K) |
| 22 kW | 180M | SF-V5RU22K | 01540(30K) | 180M | SF-V5RUH22K | 00770(30K) |
| 30 kW | 200L ② | SF-V5RU30K | 01870(37K) | 200L ② | SF-V5RUH30K | 00930(37K) |
| 37 kW | 200L ② | SF-V5RU37K | 02330(45K) | 200L ② | SF-V5RUH37K | 01160(45K) |
| 45 kW | 200L ② | SF-V5RU45K | 03160(55K) | 200L ② | SF-V5RUH45K | 01800(55K) |
| 55 kW | 225S ① | SF-V5RU55K | 03800(75K) | 225S ① | SF-V5RUH55K | 02160(75K) |
| 75 kW | 250MD | SF-THY | 04750(90K) | 250MD | SF-THY | 02600(90K) |
| 90 kW | — | — | — | 250MD | SF-THY | 03250(110K) |
| 110 kW | — | — | — | 280MD | SF-THY | 03610(132K) |
| 132 kW | — | — | — | 280MD | SF-THY | 04320(160K) |
| 160 kW | — | — | — | 280MD | SF-THY | 04810(185K) |
| 200 kW | — | — | — | 280L | SF-THY | 05470(220K) |
| 250 kW | — | — | — | 315H | SF-THY | 06830(280K) |

***Tab. 2-40:*** *Combination with the SF-V5RU and SF-THY*

● Combination with the SF-V5RU1, 3, 4, and SF-THY (ND rating)

| | SF-V5RU□1 (1:2) | | | SF-V5RU□3 (1:3) | | | SF-V5RU□4 (1:4) | | |
|---|---|---|---|---|---|---|---|---|---|
| **Voltage** | **200 V class** | | | | | | | | |
| **Rated speed** | **1000 r/min** | | | **1000 r/min** | | | **500 r/min** | | |
| **Base frequency** | **33.33 Hz** | | | **33.33 Hz** | | | **16.6 Hz** | | |
| **Maximum speed** | **2000 r/min** | | | **3000 r/min** | | | **2000 r/min** | | |
| **Motor capacity** | **Motor frame number** | **Motor model** | **Inverter model FR-A820-□** | **Motor frame number** | **Motor model** | **Inverter model FR-A820-□** | **Motor frame number** | **Motor model** | **Inverter model FR-A820-□** |
| 1.5 kW | 100L | SF-V5RU1K1 (Y) | 00167(2.2K) | 112M | SF-V5RU1K3 (Y) | 00167(2.2K) | 132M | SF-V5RU1K4 (Y) | 00167(2.2K) |
| 2.2 kW | 112M | SF-V5RU2K1 (Y) | 00250(3.7K) | 132S | SF-V5RU2K3 (Y) | 00250(3.7K) | 160M | SF-V5RU2K4 (Y) | 00250(3.7K) |
| 3.7 kW | 132S | SF-V5RU3K1 (Y) | 00340(5.5K) | 132M | SF-V5RU3K3 (Y) | 00340(5.5K) | 160L | SF-V5RU3K4 | 00340(5.5K) ④ |
| 5.5 kW | 132M | SF-V5RU5K1 (Y) | 00490(7.5K) | 160M | SF-V5RU5K3 (Y) | 00490(7.5K) | 180L | SF-V5RU5K4 (Y) | 00490(7.5K) |
| 7.5 kW | 160M | SF-V5RU7K1 (Y) | 00630(11K) | 160L | SF-V5RU7K3 (Y) | 00630(11K) | 200L | SF-V5RU7K4 (Y) | 00630(11K) |
| 11 kW | 160L | SF-V5RU11K1 (Y) | 00770(15K) | 180M | SF-V5RU11K3 (Y) | 00770(15K) | 225S | SF-V5RU11K4 (Y) | 00770(15K) |
| 15 kW | 180M | SF-V5RU15K1 (Y) | 00930 (18.5K) | 180L | SF-V5RU15K3 (Y) | 00930 (18.5K) | 225S | SF-V5RU15K4 | 00930 (18.5K) ④ |
| 18.5 kW | 180L | SF-V5RU18K1 (Y) | 01250(22K) | 200L | SF-V5RU18K3 (Y) | 01250(22K) | 250MD | SF-THY | 01250(22K) |
| 22 kW | 200L | SF-V5RU22K1 (Y) | 01540(30K) | 200L | SF-V5RU22K3 (Y) | 01540(30K) | 280MD | SF-THY | 01540(30K) |
| 30 kW | 200L ③ | SF-V5RU30K1 (Y) | 01870(37K) | 225S ① | SF-V5RU30K3 (Y) | 01870(37K) | 280MD | SF-THY | 01870(37K) |
| 37 kW | 225S | SF-V5RU37K1 (Y) | 02330(45K) | 250MD ① | SF-THY | 02330(45K) | 280MD | SF-THY | 02330(45K) |
| 45 kW | 250MD | SF-THY | 03160(55K) | 250MD ① | SF-THY | 03160(55K) | 280MD | SF-THY | 03160(55K) |
| 55 kW | 250MD | SF-THY | 03800(75K) | 280MD ① | SF-THY | 03800(75K) | 280L | SF-THY | 03800(75K) |

***Tab. 2-41:*** *Combination with the SF-V5RU1, 3, 4, and SF-THY*

Models surrounded by black borders and 400 V class are developed upon receipt of order.

① The maximum speed is 2400 r/min.

② 80% output in the high-speed range. (The output is reduced when the speed is 2400 r/min or faster.)

③ 90% output in the high-speed range. (The output is reduced when the speed is 1000 r/min or faster.)

④ For motors with overload capacity 150% 60 s ("Y" at the end of their model names), contact your sales representative.

# 2.9 Connection of stand-alone option units

The inverter accepts a variety of stand-alone option units as required.

Incorrect connection will cause inverter damage or accident. Connect and operate the option unit carefully in accordance with the corresponding option unit manual.

## 2.9.1 Connection of the dedicated external brake resistor (FR-ABR)

For FR-A820-00490(7.5K) or lower and FR-A840-00250(7.5K) or lower, the plug-in brake resistor is connected across terminals P/+ and PX.

When the plug-in brake resistor does not have enough thermal capability for high-duty operation, install an external dedicated brake resistor (FR-ABR). At this time, remove the jumper from across terminals PR and PX and connect the FR-ABR across terminals P/+ and PR. (For the locations of terminal P/+ and PR, refer to the terminal block layout (page 2-26).)

Removing jumpers across terminals PR and PX disables the plug-in brake resistor (power is not supplied). The plug-in brake resistor can be left connected to the inverter, and so is the plug-in brake resistor's lead wire connected to the terminal.

The FR-ABR can be applicable to FR-A820-01250(22K) or lower and FR-A840-00620(22K) or lower.

Set parameters as below.

- Pr. 30 "Regenerative function selection" = "1"
- Pr. 70 "Special regenerative brake duty" = "7.5K or lower: 10%, 11K or higher: 6%"

(Refer to page 5-652.)

**FR-A820-00046(0.4K), 00077(0.75K)**

① Remove the screws in terminals PR and PX and remove the jumper.

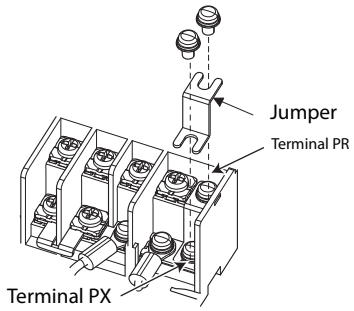


② Connect the brake resistor across terminals P/+ and PR. (The jumper should remain disconnected.)

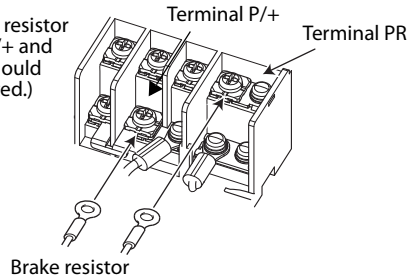


I002401E

**FR-A820-00105(1.5K) to 00250(3.7K), FR-A840-00023(0.4K) to 00126(3.7K)**

① Remove the screws in terminals PR and PX and remove the jumper.

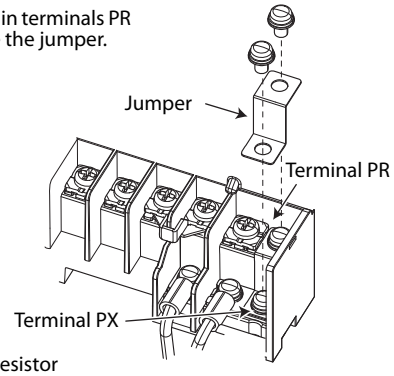


② Connect the brake resistor across terminals P/+ and PR. (The jumper should remain disconnected.)

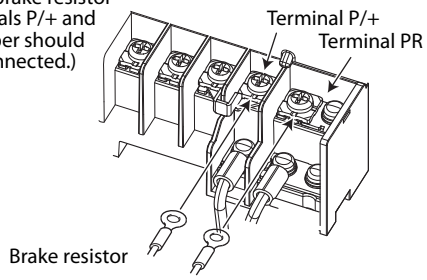


I002402E

**FR-A820-00340(5.5K), 00490(7.5K), FR-A840-00170(5.5K), 00250(7.5K)**

① Remove the screws in terminals PR and PX and remove the jumper.

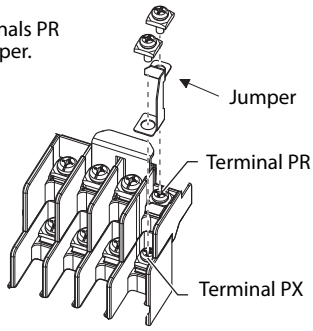


② Connect the brake resistor across terminals P/+ and PR. (The jumper should remain disconnected.)

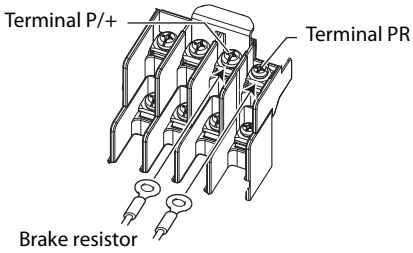


I002403E

**FR-A820-00630(11K), FR-A840-00310(11K), 00380(15K)**

Connect the brake resistor across terminals P/+ and PR.

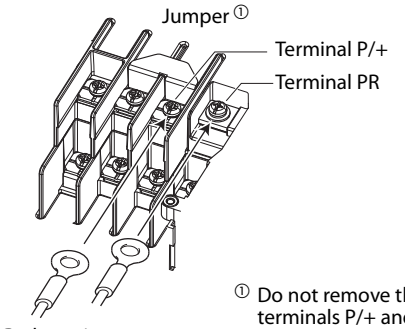


① Do not remove the jumper across terminals P/+ and P1 except when connecting a DC reactor (FR-HEL).

I002404E

**FR-A820-00770(15K) to 01250(22K), FR-A840-00470(18.5K), 00620(22K)**

Connect the brake resistor across terminals P3 and PR.

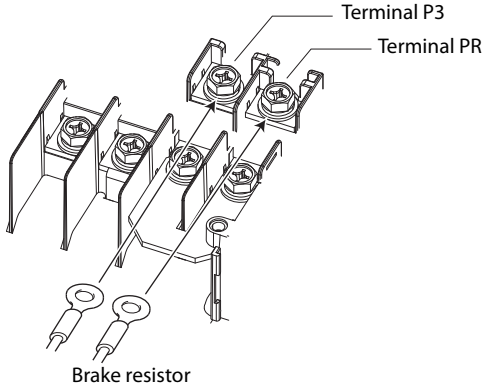


I002405E

***Tab. 2-42:*** *Connection of the external brake resistor*

When the regenerative brake transistor is damaged, the following sequence is recommended to prevent overheat and burnout of the brake resistor.

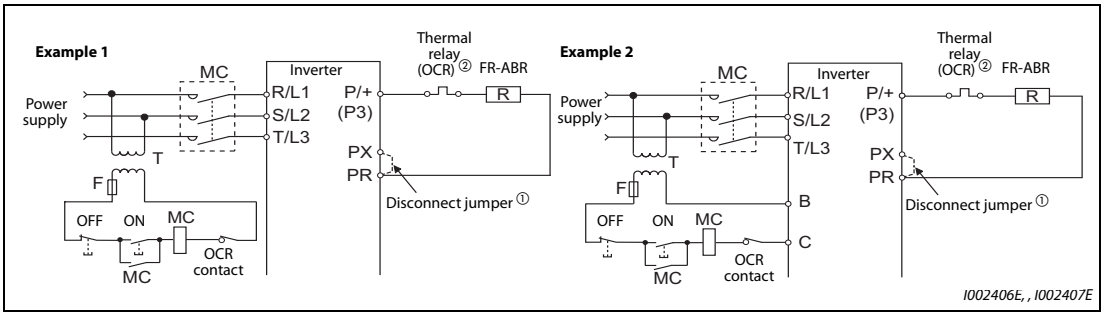


***Fig. 2-57:*** *Protective circuit*

① Since the FR-A820-00630(11K) or higher and FR-A840-00310(11K) or higher are not provided with the PX terminal, a jumper need not to be removed.

② Refer to the table below for the thermal relay types for each capacity. Refer to the diagram below for the connection. Always install a thermal relay when using a brake resistor whose capacity is11K or higher.

| Power supply voltage | High-duty brake resistor brake resistor | Thermal relay type (Mitsubishi product) | Contact rating |
|---|---|---|---|
| 200 V | FR-ABR-0.4K | TH-N20CXHZ-0.7A | 110 V AC 5A, 220 V AC 2A (AC11 class) 110 V DC 0.5A, 220 V DC 0.25A (DC11 class) |
| | FR-ABR-0.75K | TH-N20CXHZ-1.3A | |
| | FR-ABR-2.2K | TH-N20CXHZ-2.1A | |
| | FR-ABR-3.7K | TH-N20CXHZ-3.6A | |
| | FR-ABR-5.5K | TH-N20CXHZ-5A | |
| | FR-ABR-7.5K | TH-N20CXHZ-6.6A | |
| | FR-ABR-11K | TH-N20CXHZ-11A | |
| | FR-ABR-15K | TH-N20CXHZ-11A | |
| | FR-ABR-22K | TH-N60-22A | |
| 400 V | FR-ABR-H0.4K | TH-N20CXHZ-0.24A | |
| | FR-ABR-H0.75K | TH-N20CXHZ-0.35A | |
| | FR-ABR-H1.5K | TH-N20CXHZ-0.9A | |
| | FR-ABR-H2.2K | TH-N20CXHZ-1.3A | |
| | FR-ABR-H3.7K | TH-N20CXHZ-2.1A | |
| | FR-ABR-H5.5K | TH-N20CXHZ-2.5A | |
| | FR-ABR-H7.5K | TH-N20CXHZ-3.6A | |
| | FR-ABR-H11K | TH-N20CXHZ-6.6A | |
| | FR-ABR-H15K | TH-N20CXHZ-6.6A | |
| | FR-ABR-H22K | TH-N20-9A | |

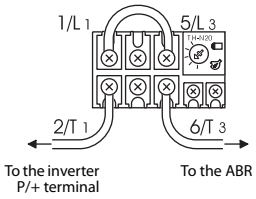


***Tab. 2-43:*** *Combination of resistor and thermal relay*

**NOTES**

Always use the dedicated brake resistor.

For FR-A820-00490(7.5K) or lower and FR-A840-00250(7.5K) or lower, the jumper across terminals PR and PX must be disconnected before connecting the dedicated brake resistor.

A brake resistor cannot be used with options such as brake units, high power factor converters, and power regeneration converters.

For the use of a brake resistor other than FR-ABR, contact your sales representative.

## 2.9.2 Connection of the brake unit (FR-BU2)

Connect the brake unit (FR-BU2(H)) as shown below to improve the braking capability during deceleration.

**Connection example with the GRZG type discharging resistor**

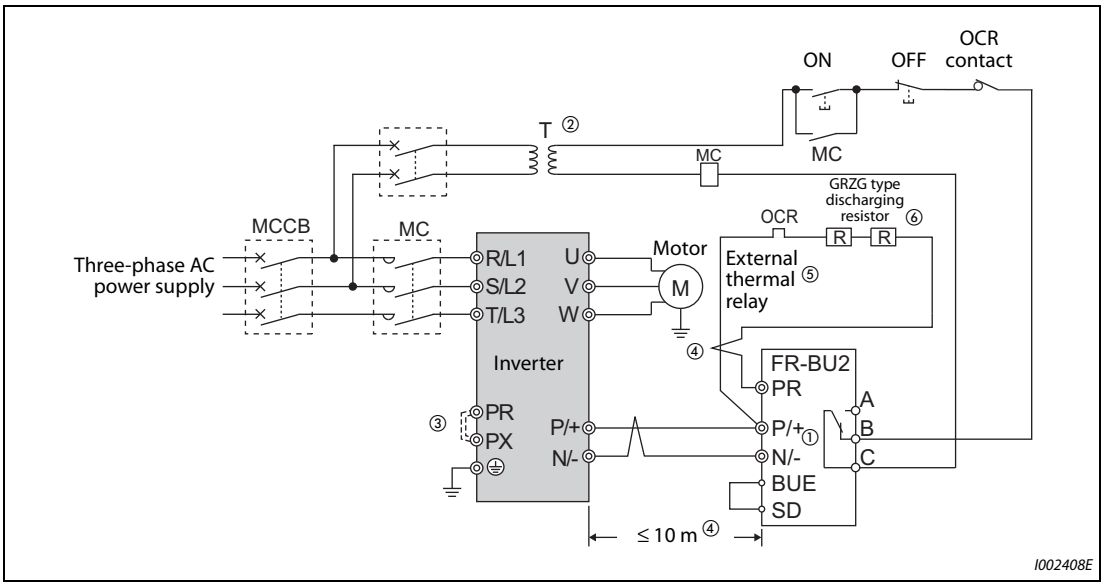


***Fig. 2-58:*** *Connection with the brake unit FR-BU2*

① When wiring, make sure to match the terminal symbol (P/+, N/-) at the inverter side and at the brake unit (FR-BU2) side.
(Incorrect connection will damage the inverter and brake unit.)

② When the power supply is 400 V class, install a stepdown transformer.

③ Be sure to remove the jumper across terminals PR and PX when using the FR-BU2 with the inverter of FR-A820-00490(7.5K) or lower, FR-A840-00250(7.5K) or lower.

④ The wiring distance between the inverter and brake unit (FR-BU2), and between the brake unit (FR-BU2) and discharging resistor must be within 5 m each. Even when the wires are twisted, the cable length must be within 10 m.

⑤ It is recommended to install an external thermal relay to prevent overheat of the discharging resistor.

⑥ For the connection method of the discharging resistor, refer to the Instruction Manual of the FR-BU2.

| Brake unit | Discharging resistor | Recommended external thermal relay |
|---|---|---|
| FR-BU2-1.5K | GZG 300W-50Ω (one) | TH-N20CXHZ 1.3A |
| FR-BU2-3.7K | GRZG 200-10Ω (three in series) | TH-N20CXHZ 3.6A |
| FR-BU2-7.5K | GRZG 300-5Ω (four in series) | TH-N20CXHZ 6.6A |
| FR-BU2-15K | GRZG 400-2Ω (six in series) | TH-N20CXHZ 11A |
| FR-BU2-H7.5K | GRZG 200-10Ω (six in series) | TH-N20CXHZ 3.6A |
| FR-BU2-H15K | GRZG 300-5Ω (eight in series) | TH-N20CXHZ 6.6A |
| FR-BU2-H30K | GRZG 400-2Ω (twelve in series) | TH-N20CXHZ 11A |

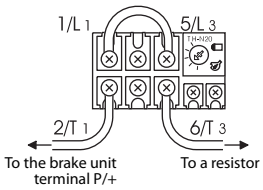


***Tab. 2-44:*** *Recommended external thermal relay*

**NOTES**

Set "1" in Pr. 0 "Brake mode selection" of the FR-BU2 to use a GRZG type discharging resistor.

Do not remove the jumper across terminals P/+ and P1 except when connecting a DC reactor (FR-HEL).

**Connection example with the FR-BR-(H) resistor unit**

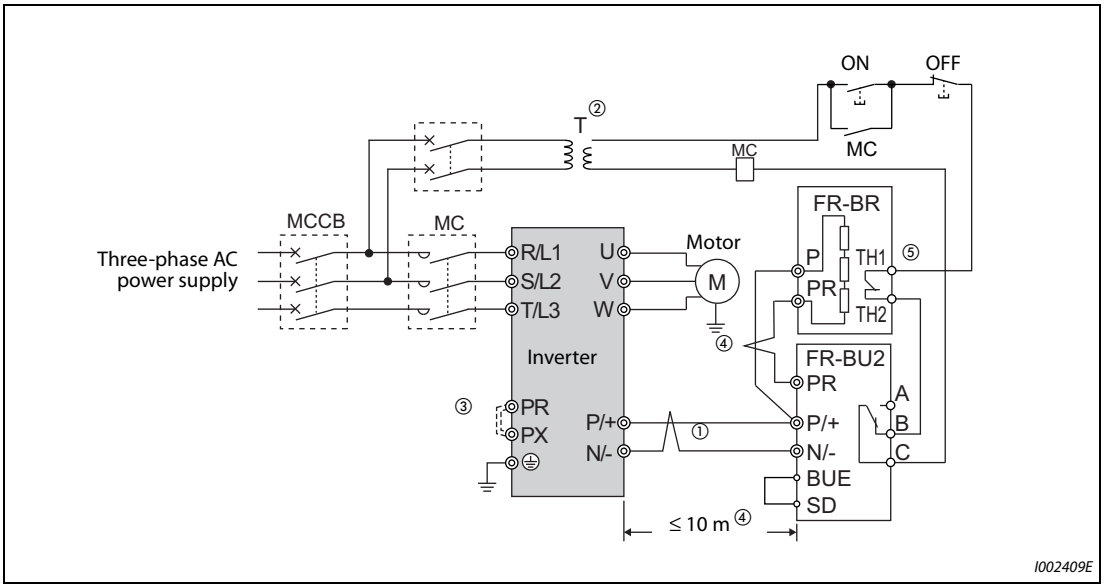


***Fig. 2-59:*** *Connection example with the FR-BR-(H) resistor unit*

① When wiring, make sure to match the terminal symbol (P/+, N/-) at the inverter side and at the brake unit (FR-BU2) side. (Incorrect connection will damage the inverter and brake unit.)

② When the power supply is 400 V class, install a stepdown transformer.

③ Be sure to remove the jumper across terminals PR and PX when using the FR-BU2 with the inverter of FR-A820-00490(7.5K) or lower, FR-A840-00250(7.5K) or lower.

④ The wiring distance between the inverter and brake unit (FR-BU2), and between the brake unit (FR-BU2) and resistor unit (FR-BR) must be within 5 m each. Even when the wire is twisted, the cable length must be within 10 m.

⑤ The contact between TH1 and TH2 is closed in the normal status and is open at a fault.

**NOTE**

Do not remove the jumper across terminals P/+ and P1 except when connecting a DC reactor (FR-HEL).

**Connection example with the MT-BR5 type resistor unit**

After wiring securely, set Pr. 30 "Regenerative function selection"= "1" and Pr. 70 "Special regenerative brake duty" = "0 (initial value)".

Set Pr. 0 "Brake mode selection" = "2" in the brake unit FR-BU2.

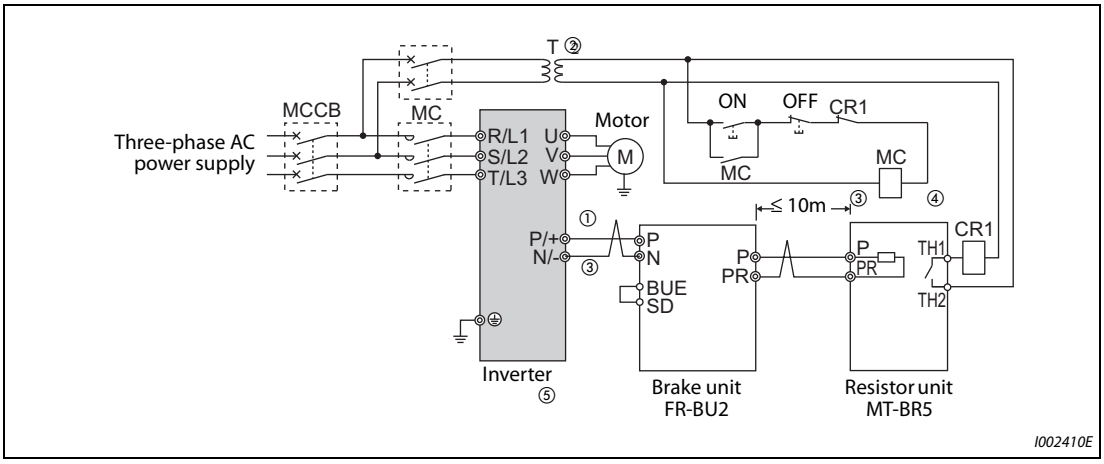


***Fig. 2-60:*** *Connection example with the MT-BR5 type resistor unit*

① When wiring, make sure to match the terminal symbol (P/+, N/-) at the inverter side and at the brake unit (FR-BU2) side. (Incorrect connection will damage the inverter and brake unit.)

② When the power supply is 400 V class, install a stepdown transformer.

③ The wiring distance between the inverter and brake unit (FR-BU2), and between the brake unit (FR-BU2) and resistor unit (MT-BR5) must be within 5 m each. Even when the wire is twisted, the cable length must be within 10 m.

④ The contact between TH1 and TH2 is open in the normal status and is closed at a fault.

⑤ The CN8 connector used with the MT-BU5 type brake unit is not used.

**NOTE**

The stall prevention (overvoltage), oL, does not occur while Pr. 30 "Regenerative function selection" = "1" and Pr. 70 "Special regenerative brake duty" = "0% (initial value)." (Refer to page 5-652.)

## 2.9.3 Connection of the brake unit (FR-BU)

Connect the brake unit (FR-BU2(H)) as shown below to improve the braking capability during deceleration.

The FR-BU is compatible with FR-A820-03160(55K) or lower and FR-A840-01800(55K) and lower.

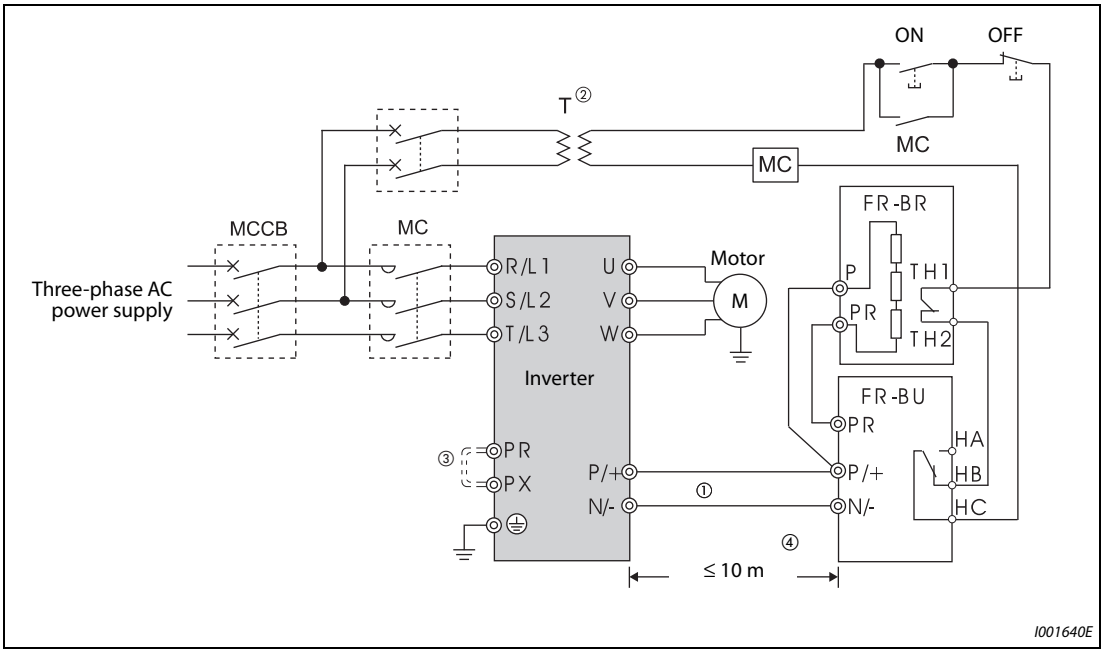


***Fig. 2-61:*** *Connection with the brake unit FR-BU*

① When wiring, make sure to match the terminal symbol (P/+, N/-) at the inverter side and at the brake unit (FR-BU(H)) side. (Incorrect connection will damage the inverter.)

② When the power supply is 400 V class, install a stepdown transformer.

③ For the FR-A820-00490(7.5K) or lower and FR-A840-00250(7.5K) or lower, be sure to remove the jumper across terminals PR and PX.

④ The wiring distance between the inverter and brake unit (FR-BU2), and between the brake unit (FR-BU) and discharging resistor unit (FR-BR) must be within 5 m each. Even when the cable is twisted, the wiring length must be within 10 m.

**NOTES**

If the transistors in the brake unit should becomes faulty, the resistor will overheat. Install a magnetic contactor on the inverter's input side and configure a circuit that shut off the current in case of a fault.

Do not remove the jumper across terminals P/+ and P1 except when connecting a DC reactor (FR-HEL).

## 2.9.4 Connection of the brake unit (BU type)

Connect the brake unit (BU type) correctly as shown below. Incorrect connection will damage the inverter. Remove the jumpers across terminals HB and PC and terminals TB and HC of the brake unit and fit one across terminals PC and TB.

The BU type is compatible with FR-A820-03160(55K) or lower and FR-A840-01800(55K) and lower.

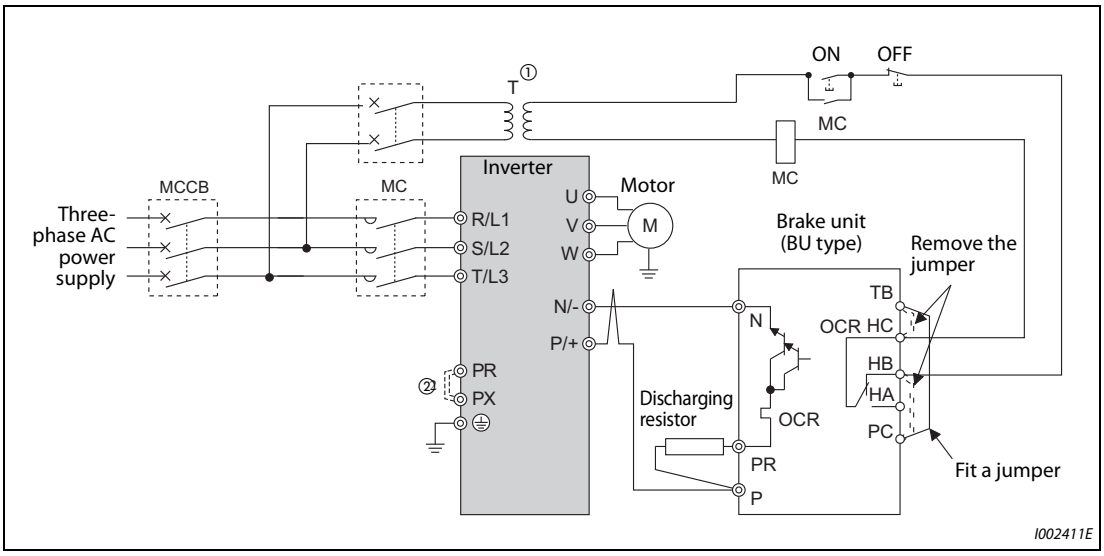


***Fig. 2-62:*** *Connection with the brake unit BU*

① When the power supply is 400 V class, install a stepdown transformer.

② For the FR-A820-00490(7.5K) or lower and FR-A840-00250(7.5K) or lower, be sure to remove the jumper across terminals PR and PX.

**NOTES**

The wiring distance between the inverter and brake unit (BU type), and between the brake unit (BU type) and discharging resistor must be within 2 m each. Even when the cable is twisted, the wiring length must be within 5 m.

If the transistors in the brake unit should becomes faulty, the resistor will overheat and result in a fire. Install a magnetic contactor on the inverter's input side and configure a circuit that shut off the current in case of a fault.

Remove the jumper across terminals P/+ and P1 only when connecting a DC reactor (FR-HEL).

## 2.9.5 Connection of the high power factor converter (FR-HC2)

When connecting the high power factor converter (FR-HC2) to suppress power harmonics, perform wiring securely as shown below. Incorrect connection will damage the high power factor converter and the inverter.

After making sure that the wiring is correct, set "rated motor voltage" in Pr. 19 "Base frequency voltage" (under V/F control) or Pr. 83 "Rated motor voltage" (under other that V/F control) and "2" in Pr. 30 "Regenerative function selection". (Refer to page 5-652.)

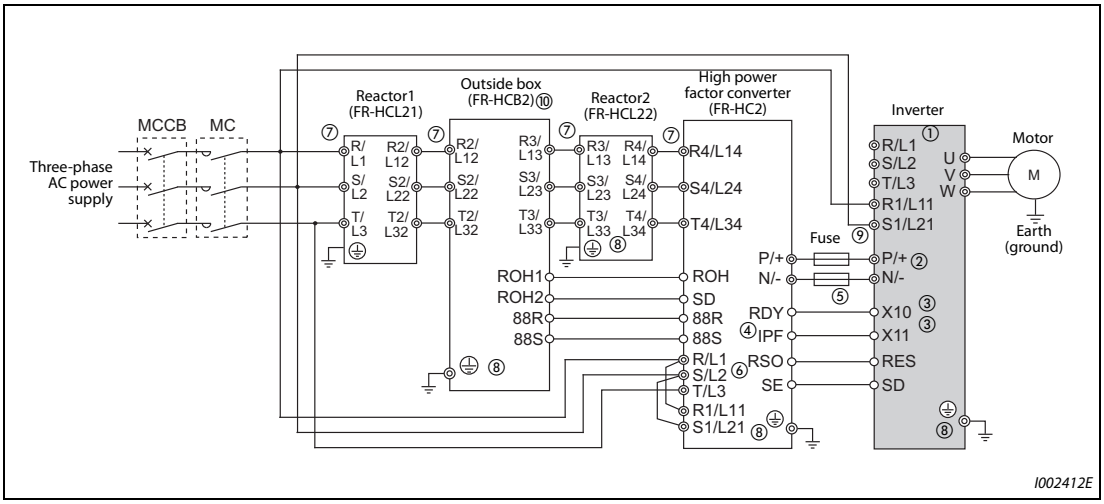


***Fig. 2-63:*** *Connection of the high power factor converter FR-HC2*

① Remove jumpers between terminal R/L1 and R1/L11 as well as between S/L2 and S1/L21, and connect the power supply for the control circuit to terminals R1/L11 and S1/L21. Do not connect anything to power input terminals (R/L1, S/L2, T/L3). Incorrect connection will damage the inverter. (E.OPT (option fault) will occur. (Refer to page 6-26.)

② Do not install an MCCB across the terminals P/+ and N/- (across terminals P and P/+ or across N and N/-). Connecting the opposite polarity of terminals N/- and P/+ will damage the inverter.

③ Use Pr. 178 to Pr. 189 (input terminal function selection) to assign the terminals used for the X10 (X11) signal. (Refer to page 5-409.)
For RS-485 or any other communication where the start command is only transmitted once, use the X11 signal to save the operation mode at the time of an instantaneous power failure.

④ Assign the IPF signal to an FR-HC2 terminal. (Refer to the Instruction Manual of FR-HC2.)

⑤ Always connect the FR-HC2 terminal RDY to a terminal where the X10 signal or MRS signal is assigned in the inverter. Always connect the FR-HC2 terminal SE to the inverter terminal SD. Not connecting these terminals may damage the FR-HC2.

⑥ Always connect the R/L1, S/L2, and T/L3 terminals of FR-HC2 to the power supply. Operating the inverter without connecting them will damage the FR-HC2.

⑦ Do not install an MCCB or MC between the reactor 1 terminals (R/L1, S/L2, T/L3) and the FR-HC2 terminals (R4/L14, S4/L24, T4/L34). It will not operate properly.

⑧ Securely perform grounding (earthing) by using the grounding (earthing) terminal.

⑨ Installation of a fuse is recommended. (Refer to the Instruction Manual of FR-HC2.)

⑩ Outside box is not available for FR-HC2-H280K or higher. Connect filter capacitors, inrush current limit resistors, and magnetic contactors. (Refer to the Instruction Manual of FR-HC2.)

**NOTES**

The voltage phases of terminals R/L1, S/L2, and T/L3 and the voltage phases of terminals R4/L14, S4/L24, and T4/L34 must be matched.

The control logic (sink logic/source logic) of the high power factor converter and the inverter must be matched. (Refer to page 2-40.)

Do not connect a DC reactor (FR-HEL) to the inverter when FR-HC2 is connected.

## 2.9.6 Connection of the power regeneration common converter (FR-CV)

When connecting the power regeneration common converter (FR-CV), connect the inverter terminals (P/+, N/-) and the power regeneration common converter (FR-CV) terminals as shown below so that their symbols match with each other.

The FR-CV is applicable to FR-A820-03160(55K) or lower and FR-A840-01800(55K) or lower.

After making sure that the wiring is correct, set "2" in Pr. 30 "Regenerative function selection". (Refer to page 5-652.)

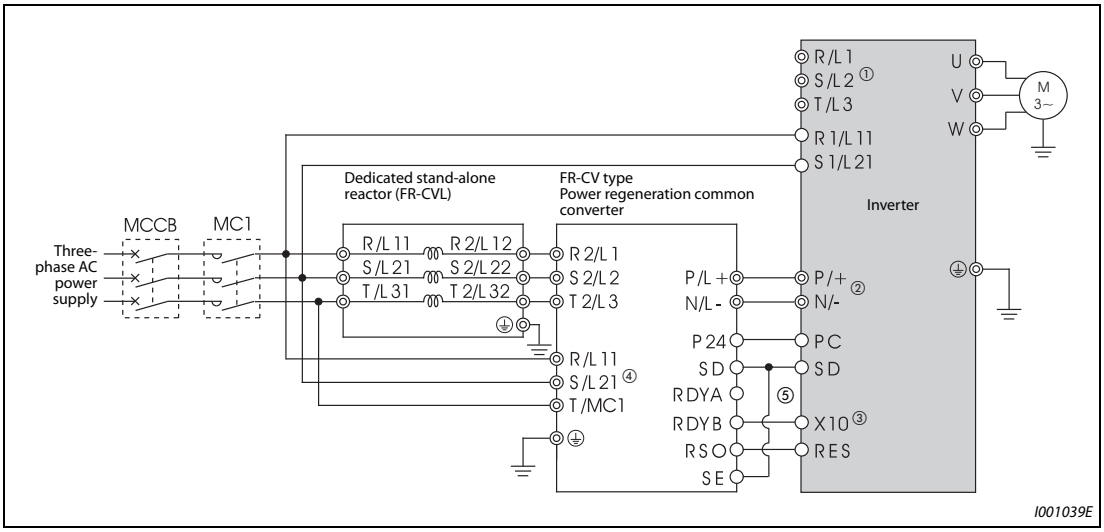


***Fig. 2-64:*** *Connection of the power regeneration common converter (FR-CV)*

① Remove jumpers between terminals R/L1 and R1/L11 as well as between S/L2 and S1/L21, and connect the power supply for the control circuit to terminals R1/L11 and S1/L21. Do not connect anything to power input terminals (R/L1, S/L2, T/L3). Incorrect connection will damage the inverter. (E.OPT (option fault) will occur. (Refer to page 6-26.)

② Do not insert an MCCB between terminals P/+ and N/- (between terminals P/L+ and P/+ or between N/L- and N/-). Connecting the opposite polarity of terminals N/- and P/+ will damage the inverter.

③ Use Pr. 178 to Pr. 189 (input terminal function selection) to assign the terminals used for the X10 signal. (Refer to page 5-409.)

④ Be sure to connect the power supply and terminals R/L11, S/L21, and T/MC1. Operating the inverter without connecting them will damage the power regeneration common converter.

⑤ Always connect terminal RDYB of the FR-CV to the inverter terminal where the X10 signal or the MRS signal is assigned to. Always connect terminal SE of the FR-CV to the inverter terminal SD. Not connecting these terminals may damage the FR-CV.

**NOTES**

The voltage phases of terminals R/L11, S/L21, and T/MC1 and the voltage phases of terminals R2/L1, S2/L2, and T2/L3 must be matched.

Use the sink logic (factory setting) when the FR-CV is connected. It cannot be connected when the source logic is selected.

Do not connect a DC reactor (FR-HEL) to the inverter when FR-CV is connected.

## 2.9.7 Connection of the power regeneration converter (MT-RC)

When connecting the power regeneration converter (MT-RC), perform wiring securely as shown below. Incorrect connection will damage the power regeneration converter and the inverter. The MT-RC is applicable to FR-A840-02160(75K) or higher. After making sure that the wiring is correct, set "1" in Pr. 30 "Regenerative function selection" and "0" in Pr. 70 "Special regenerative brake duty".

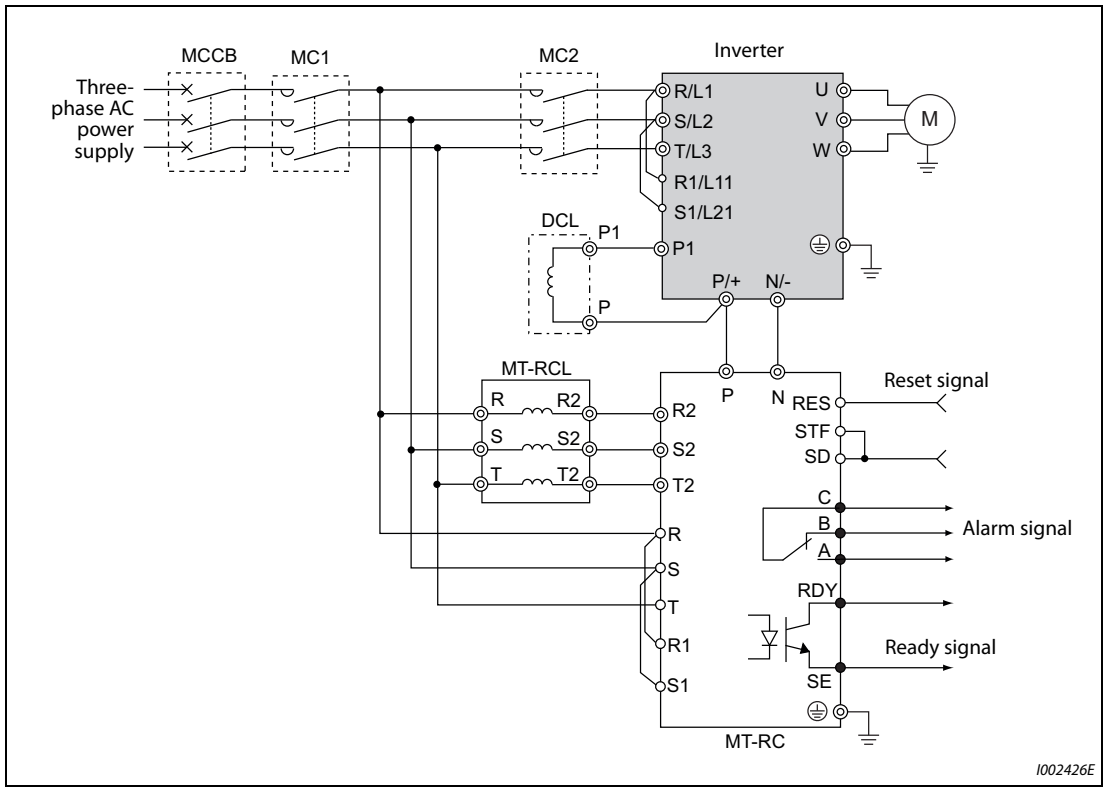


***Fig. 2-65:*** *Connection of the power regeneration converter (MT-RC)*

**NOTES**

When using the inverter with the MT-RC, install a magnetic contactor (MC) at the input side of the inverter so that power is supplied to the inverter after 1 s or more has elapsed after powering ON the MT-RC. When power is supplied to the inverter prior to the MT-RC, the inverter and the MT-RC may be damaged or the MCCB may trip or be damaged.

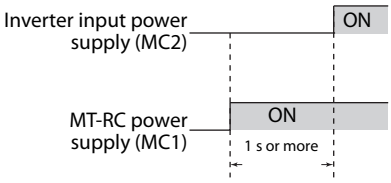


When connecting the power coordination reactor and others, refer to Instruction Manual of the MT-RC for precautions.

## 2.9.8 Connection of the DC reactor (FR-HEL)

- Keep the surrounding air temperature within the permissible range (-10 °C to +50 °C). Keep enough clearance around the reactor because it heats up. (Take 10 cm or more clearance on top and bottom and 5 cm or more on left and right regardless of the installation direction.)

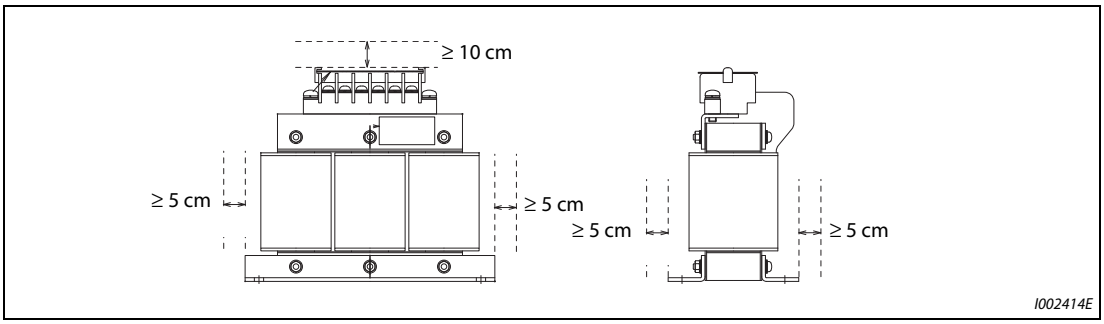


***Fig. 2-66:*** *Clearances around the DC reactor (FR-HEL)*

- When using the DC reactor (FR-HEL), connect it across terminals P/+ and P1.
  For the FR-A820-03160(55K) or lower and FR-A840-01800(55K) or lower, the jumper connected across terminals P/+ and P1 must be removed.
  Otherwise, the reactor will not be effective.

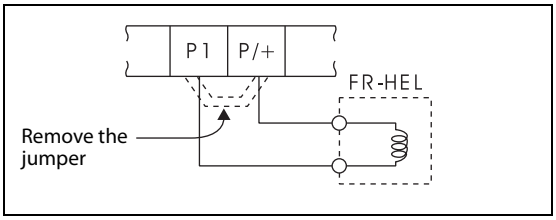


***Fig. 2-67:***
*Connection of the DC reactor (FR-HEL)*

- Select a DC reactor according to the applied motor capacity. (Refer to page 8-1.)
  For the FR-A820-03800(75K) or higher, the FR-A840-02160(75K) or higher, and when a 75 kW or higher motor is used, always connect a DC reactor.
- Since the DC reactor (FR-HEL) is electrically connected to the enclosure through mounting screws, the DC reactor is earthed (grounded) by being securely mounted to the enclosure. However, if the DC reactor is not earthed (grounded) securely enough, an earthing (grounding) cable may be used.
  When using an earthing (grounding) cable for FR-HEL-(H)55K or lower, wire the cable to the installation hole where varnish is removed. For FR-FR-HEL-(H)75K or higher, use an earth (ground) terminal to perform earthing (grounding). (Refer to the Instruction Manual of the FR-HEL.)

**NOTES**

The wiring distance must be within 5 m.

As a reference, the cable gauge for the connection must be equal to or larger than that of the power supply cables (R/L1, S/L2, T/L3) and the earthing (grounding) cable. (Refer to page 2-29.)

# 3 Precautions for use of the inverter

## 3.1 Electro-magnetic interference (EMI) and leakage currents

### 3.1.1 Leakage currents and countermeasures

Capacitances exist between the inverter I/O cables, other cables and earth and in the motor, through which a leakage current flows. Since its value depends on the static capacitances, carrier frequency, etc., low acoustic noise operation at the increased carrier frequency of the inverter will increase the leakage current. Therefore, take the following countermeasures. Select the earth leakage current breaker according to its rated sensitivity current, independently of the carrier frequency setting.

**To-earth (ground) leakage currents**

Leakage currents may flow not only into the inverter's own line but also into the other lines through the earthing (grounding) cable, etc. These leakage currents may operate earth leakage circuit breakers and earth leakage relays unnecessarily.

- Suppression technique
  - If the carrier frequency setting is high, decrease the Pr. 72 "PWM frequency selection" setting. Note that motor noise increases. Selecting Pr. 240 "Soft-PWM operation selection" makes the sound inoffensive.
  - By using earth leakage circuit breakers designed for harmonic and surge suppression in the inverter's own line and other line, operation can be performed with the carrier frequency kept high (with low noise).
- To-earth (ground) leakage currents
  - Take caution as long wiring will increase the leakage current. Decreasing the carrier frequency of the inverter reduces the leakage current.
  - Increasing the motor capacity increases the leakage current. The leakage current of the 400 V class is larger than that of the 200 V class.

**Line-to-line leakage currents**

Harmonics of leakage currents flowing in static capacitances between the inverter output cables may operate the external thermal relay unnecessarily. When the wiring length is long (50 m or more) for the 400 V class small-capacity models (FR-A840-00250(7.5K) or lower), the external thermal relay is likely to operate unnecessarily because the ratio of the leakage current to the rated motor current increases.

**Example ▽** Line-to-line leakage current example (200 V class)
Motor: SF-JR 4P
Carrier frequency: 14.5 kHz
Cable: 2 $mm^2$, 4 cores
Cabtyre cable

| Motor capacity [kW] | Rated motor current [A] | Leakage current [mA] ① | |
|---|---|---|---|
| | | Wiring length 50 m | Wiring length 100 m |
| 0.4 | 1.8 | 310 | 500 |
| 0.75 | 3.2 | 340 | 530 |
| 1.5 | 5.8 | 370 | 560 |
| 2.2 | 8.1 | 400 | 590 |
| 3.7 | 12.8 | 440 | 630 |
| 5.5 | 19.4 | 490 | 680 |
| 7.5 | 25.6 | 535 | 725 |

***Tab. 3-1:*** *Line-to-line leakage current data example*

① The leakage currents of the 400 V class are about twice as large.

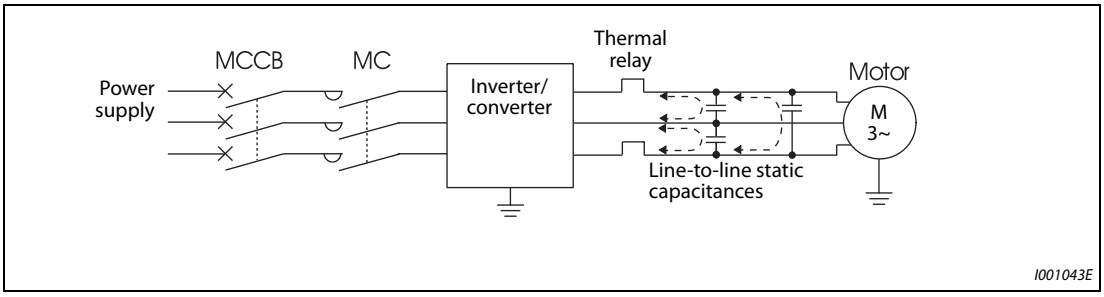


***Fig. 3-1:*** *Line-to-line leakage currents*

△

- Countermeasures
  - Use Pr. 9 "Electronic thermal O/L relay".
  - If the carrier frequency setting is high, decrease the Pr. 72 "PWM frequency selection" setting. Note that motor noise increases. Selecting Pr. 240 "Soft-PWM operation selection" makes the sound inoffensive.
    To ensure that the motor is protected against line-to-line leakage currents, it is recommended to use a temperature sensor to directly detect motor temperature.

- Installation and selection of the molded case circuit breaker

  Install a molded case circuit breaker (MCCB) on the power receiving side to protect the wiring at the inverter input side. Select an MCCB according to the inverter input side power factor, which depends on the power supply voltage, output frequency and load. Especially for a completely electromagnetic MCCB, a slightly large capacity must be selected since its operation characteristic varies with harmonic currents. (Check it in the data of the corresponding breaker.) As an earth leakage current breaker, use the Mitsubishi earth leakage current breaker designed for harmonics and surge suppression.

**Selecting the rated sensitivity current for the earth leakage circuit breaker**

When using an earth leakage circuit breaker with the inverter circuit, select its rated sensitivity current as follows, independently of the PWM carrier frequency.

- Breaker designed for harmonic and surge suppression
  Rated sensitivity current
  $I\Delta n \geq 10 \times (Ig1 + Ign + Igi + Ig2 + Igm)$
- Standard breaker
  Rated sensitivity current
  $I\Delta n \geq 10 \times \{Ig1 + Ign + Igi + 3 \times (Ig2 + Igm)\}$

Ig1, Ig2: Leakage currents in wire path during commercial power supply operation
Ign: Leakage current of inverter input side noise filter
Igm: Leakage current of motor during commercial power supply operation
Igi: Leakage current of inverter unit

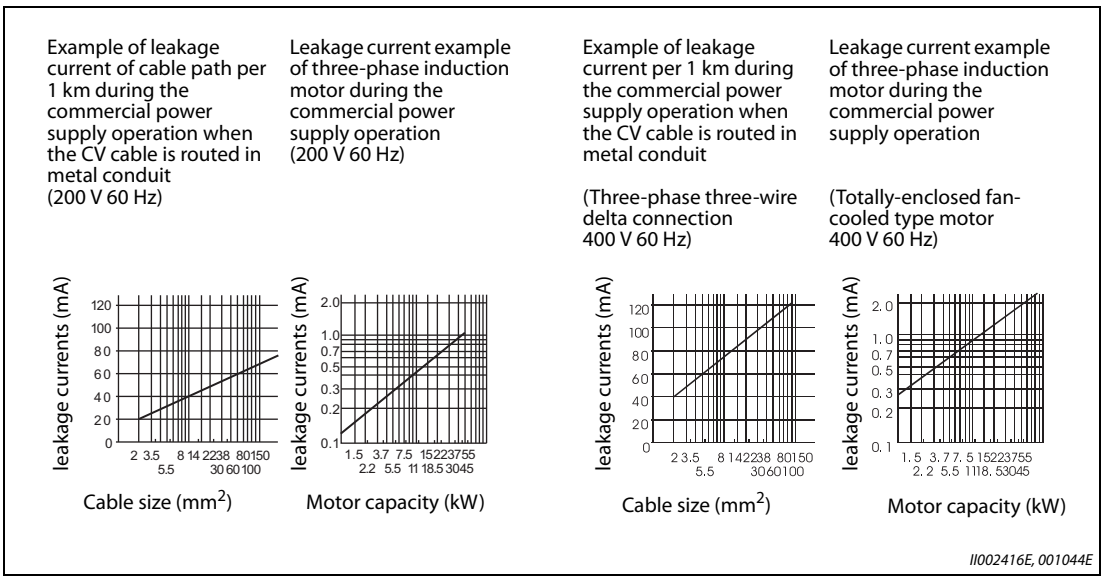


***Fig. 3-2:*** *Leakage currents*

**NOTE** For star connection, the amount of leakage current is approx. 1/3 of the above value.

**Example ▽**

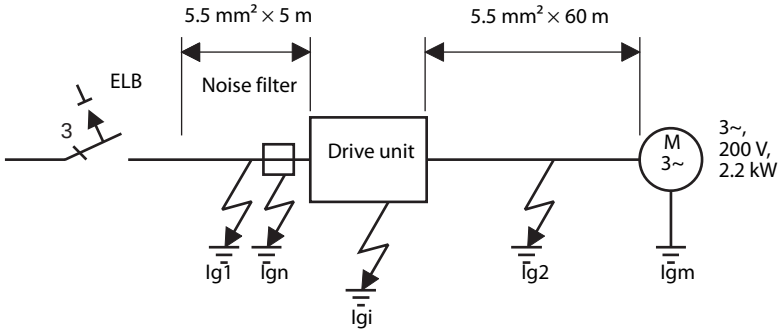


| | Breaker designed for harmonic and surge suppression | Standard breaker |
|---|---|---|
| Leakage current Ig1 (mA) | $33 \times \frac{5\ \text{m}}{1000\ \text{m}} = 0.17$ | |
| Leakage current Ign (mA) | 0 (without noise filter) | |
| Leakage current Igi (mA) | 1 (with EMC filter)<br>For the leakage current of the inverter, refer to the following table. | |
| Leakage current Ig2 (mA) | $33 \times \frac{50\ \text{m}}{1000\ \text{m}} = 1.65$ | |
| Motor leakage current Igm (mA) | 0.18 | |
| Total leakage current (mA) | 3.00 | 6.66 |
| Rated sensitivity current (mA) (≥ Ig × 10) | 30 | 100 |

***Tab. 3-2:*** *Estimation of the permanent flowing leakage current*

**Inverter leakage current (with and without EMC filter)**

Input power conditions: (200 V class: 220 V/60 Hz, 400 V class: 440 V/60 Hz, power supply unbalance within 3%)

| | Voltage (V) | EMC filter | |
|---|---|---|---|
| | | ON (mA) | OFF (mA) |
| Phase grounding | 200 | 22 | 1 |
| | 400 | 35 | 2 |
| Earthed-neutral system | 400 | 2 | 1 |

***Tab. 3-3:*** *Inverter leakage current (with and without built-in EMC filter)*

△

**NOTES**

Install the earth leakage circuit breaker (ELB) on the input side of the inverter.

In the star connection earthed-neutral system, the sensitivity current is blunt against a ground fault in the inverter output side. Earthing (Grounding) must conform to the requirements of national and local safety regulations and electrical codes. (NEC section 250, IEC 536 class 1 and other applicable standards)

When the breaker is installed on the output side of the inverter, it may be unnecessarily operated by harmonics even if the effective value is within the rating.
In this case, do not install the breaker since the eddy current and hysteresis loss will increase, leading to temperature rise.

The following models are standard breakers: BV-C1, BC-V, NVB, NV-L, NV-G2N, NV-G3NA, NV-2F, earth leakage relay (except NV-ZHA), and NV with AA neutral wire open-phase protection. The other models are designed for harmonic and surge suppression: NV-C/NV-S/MN series, NV30-FA, NV50-FA, BV-C2, earth leakage alarm breaker (NF-Z), NV-ZHA, and NV-H.

### 3.1.2 Countermeasures against inverter-generated EMI

Some electromagnetic noises enter the inverter to malfunction it, and others are radiated by the inverter to cause the peripheral devices to malfunction. Though the inverter is designed to have high immunity performance, it handles low-level signals, so it requires the following basic techniques. Also, since the inverter chops outputs at high carrier frequency, that could generate electromagnetic noises. If these electromagnetic noises cause peripheral devices to malfunction, EMI countermeasures should be taken to suppress noises. These techniques differ slightly depending on EMI paths.

- Basic techniques
  - Do not run the power cables (I/O cables) and signal cables of the inverter in parallel with each other and do not bundle them.
  - Use shielded twisted pair cables for the detector connecting and control signal cables and connect the sheathes of the shielded cables to terminal SD.
  - Ground (Earth) the inverter, motor, etc. at one point.
- Techniques to reduce electromagnetic noises that enter and cause a malfunction of the inverter (EMI countermeasures)
  When devices that generate many electromagnetic noises (which use magnetic contactors, electromagnetic brakes, many relays, for example) are installed near the inverter and the inverter may malfunction due to electromagnetic noises, the following countermeasures must be taken:
  - Provide surge suppressors for devices that generate many electromagnetic noises to suppress electromagnetic noises.
  - Install data line filters (page 3-8) to signal cables.
  - Ground (Earth) the shields of the detector connection and control signal cables with cable clamp metal.
- Techniques to reduce electromagnetic noises that are radiated by the inverter to cause the peripheral devices to malfunction (EMI countermeasures)

  Inverter-generated noises are largely classified into
  - those radiated by the cables connected to the inverter and inverter main circuits (I/O),
  - those electromagnetically and electrostatically induced to the signal cables of the peripheral devices close to the main circuit power supply,
  - and those transmitted through the power supply cables.

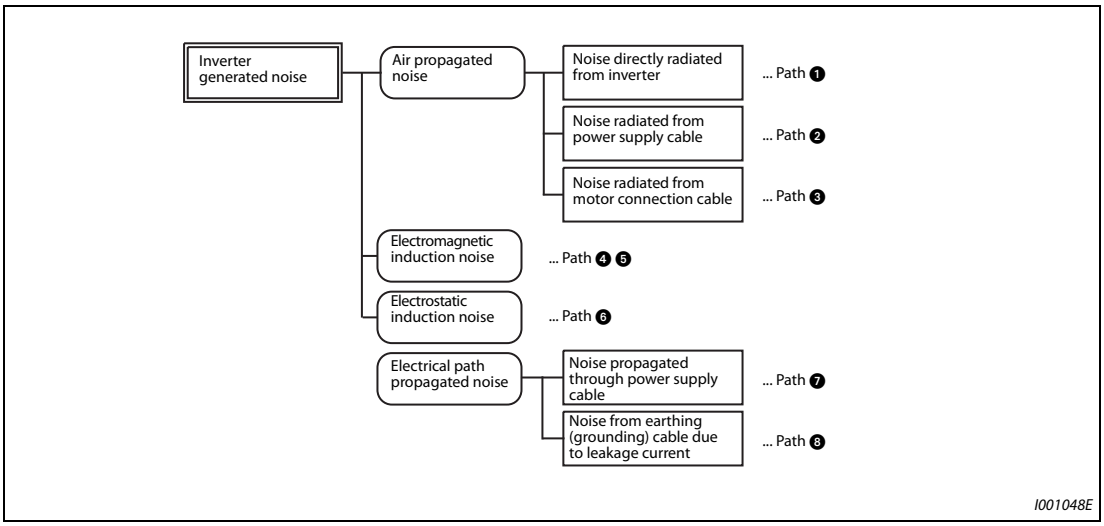


***Fig. 3-3:*** *Noise propagation*

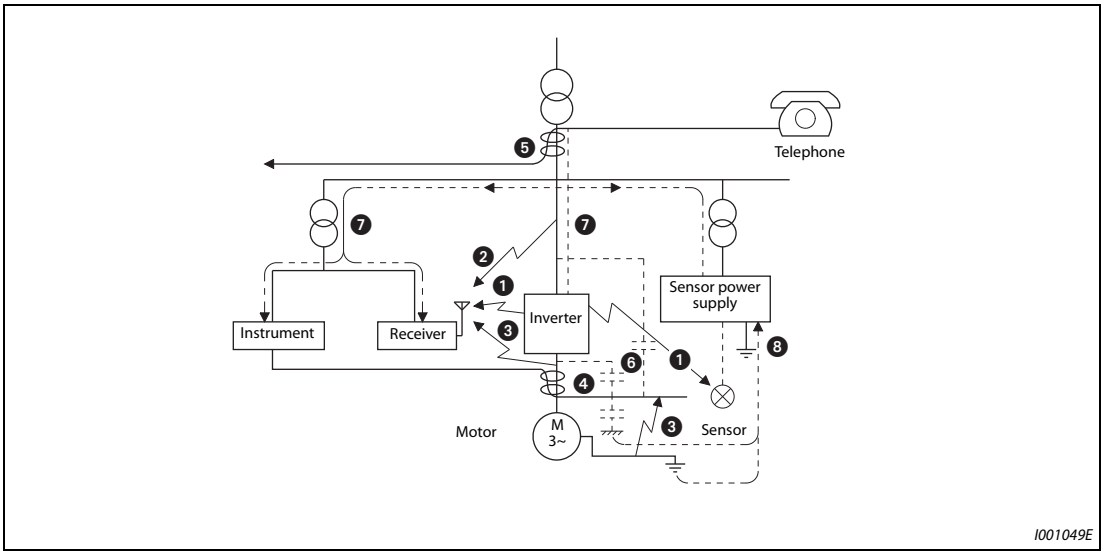


***Fig. 3-4:*** *Noise paths*

| Noise propagation path | Countermeasure |
|---|---|
| ❶ ❷ ❸ | When devices that handle low-level signals and are liable to malfunction due to electromagnetic noises, e.g. instruments, receivers and sensors, are contained in the enclosure that contains the inverter or when their signal cables are run near the inverter, the devices may malfunction due to by air-propagated electromagnetic noises. The following countermeasures must be taken:<br>• Install easily affected devices as far away as possible from the inverter.<br>• Run easily affected signal cables as far away as possible from the inverter and its I/O cables.<br>• Do not run the signal cables and power cables (inverter I/O cables) in parallel with each other and do not bundle them.<br>• Set the EMC filter ON/OFF connector of the inverter to the ON position. (Refer to page 3-9.)<br>• Inserting a line noise filter into the output suppresses the radiated noise from the cables.<br>• Use shielded cables as signal cables and power cables and run them in individual metal conduits to produce further effects. |
| ❹ ❺ ❻ | When the signal cables are run in parallel with or bundled with the power cables, magnetic and static induction noises may be propagated to the signal cables to cause malfunction of the devices and the following countermeasures must be taken:<br>• Install easily affected devices as far away as possible from the inverter.<br>• Run easily affected signal cables as far away as possible from the inverter and its I/O cables.<br>• Do not run the signal cables and power cables (inverter I/O cables) in parallel with each other and do not bundle them.<br>• Use shielded cables as signal cables and power cables and run them in individual metal conduits to produce further effects. |
| ❼ | When the power supplies of the peripheral devices are connected to the power supply of the inverter in the same line, inverter-generated noises may flow back through the power supply cables to cause malfunction of the devices and the following countermeasures must be taken:<br>• Set the EMC filter ON/OFF connector of the inverter to the ON position. (Refer to page 3-9.)<br>• Install the line noise filter (FR-BLF, FR-BSF01) to the power cables (output cables) of the inverter. |
| ❽ | When a closed loop circuit is formed by connecting the peripheral device wiring to the inverter, leakage currents may flow through the earthing (grounding) cable of the inverter to cause the device to malfunction. In that case, disconnecting the earthing (grounding) cable from the device may stop the malfunction of the device. |

***Tab. 3-4:*** *Noise and Countermeasures*

### Data line filter

Data line filter is effective as an EMI countermeasure. Provide a data line filter for the detector cable, etc.

**Example ▽** Data line filter : ZCAT3035-1330 (by TDK)
ESD-SR-250 (by NEC TOKIN)

| Impedance (Ω) | |
|---|---|
| 10 to 100 MHz | 100 to 500 MHz |
| 80 | 150 |

***Tab. 3-5:*** *Impedance (ZCAT3035-1330)*

The impedance values above are reference values, and not guaranteed values.

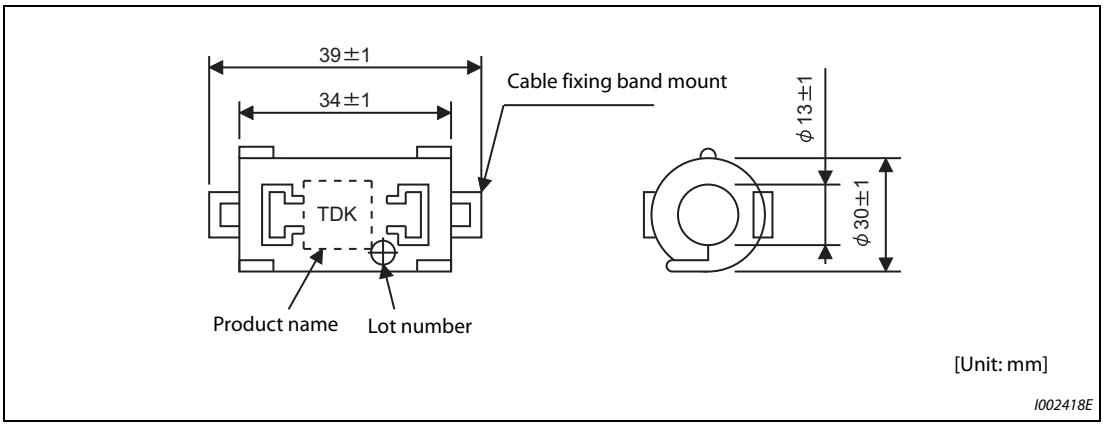


***Fig. 3-5:*** *Outline dimension drawing (ZCAT3035-1330)*

△

### EMI countermeasure example

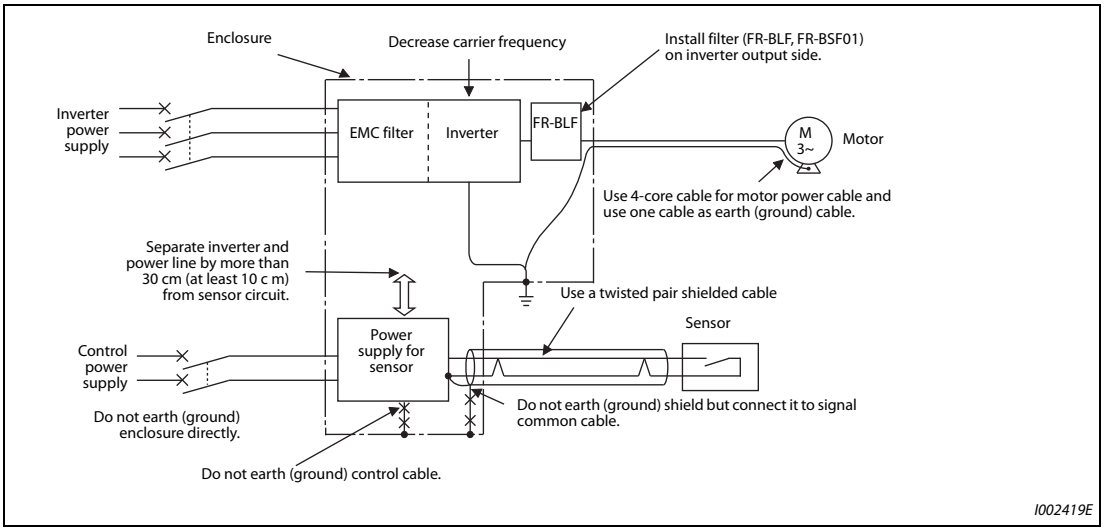


***Fig. 3-6:*** *Noise reduction examples*

**NOTE** For compliance with the EU EMC Directive, refer to the Installation Guideline.

### 3.1.3 Built-in EMC filter

This inverter is equipped with a built-in EMC filter (capacitive filter) and a common mode choke. Those filters are effective in reducing air-propagated noise on the input side of the inverter.

To enable the EMC filter, fit the EMC filter ON/OFF connector to the ON position. The FM type is initially set to "disabled" (OFF), and the CA type to "enabled" (ON).

The input side common mode choke, which is built in the FR-A820-03160(55K) or lower and FR-A840-01800(55K) or lower inverter, is always enabled regardless of the EMC filter ON/OFF connector setting.

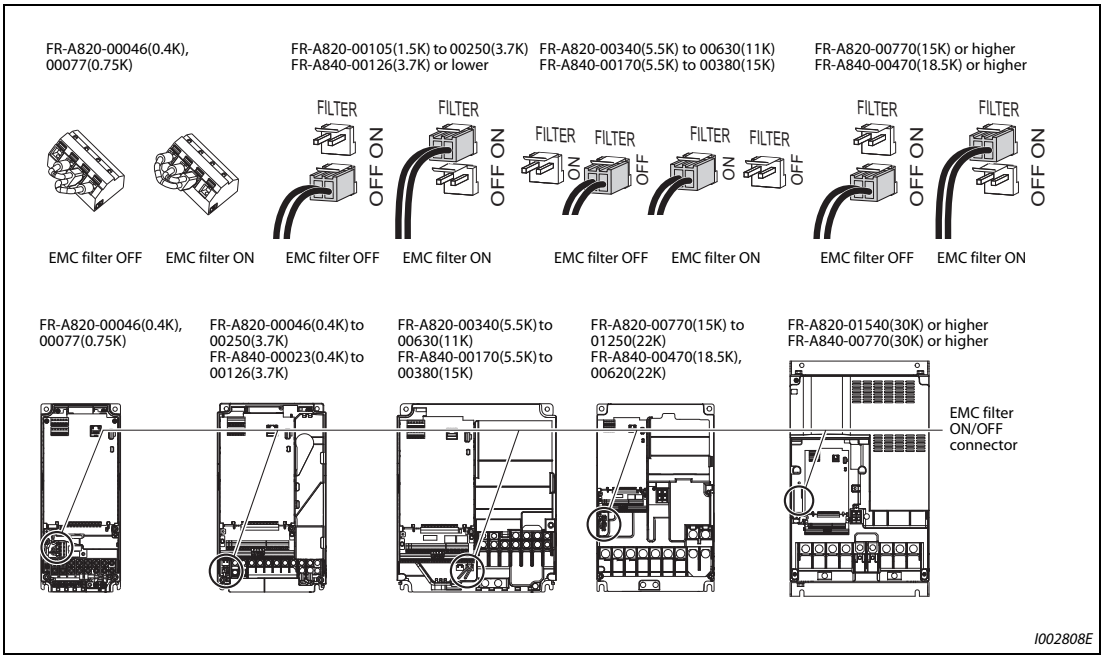


***Fig. 3-7:*** *Built-in EMC filter*

**How to enable or disable the filter**

- Before removing a front cover, check to make sure that the indication of the inverter operation panel is OFF, wait for at least 10 minutes after the power supply has been switched OFF, and check that there is no residual voltage using a tester or the like.
- For FR-A820-00105(1.5K) or higher and FR-A840-00023(0.4K) or higher

  When disconnecting the connector, push the fixing tab and pull the connector straight without pulling the cable or forcibly pulling the connector with the tab fixed.

  When installing the connector, also engage the fixing tab securely.

  If it is difficult to disconnect the connector, use a pair of needle-nose pliers, etc.

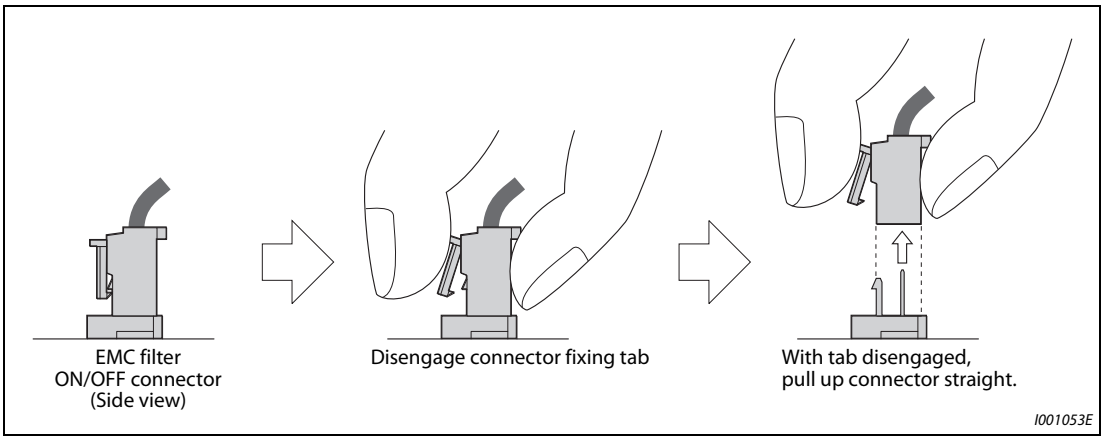


***Fig. 3-8:*** *Activating the built-in EMC filter*

- For FR-A820-00077(0.75K) or lower
  - Remove the control circuit terminal block. (Refer to page 7-11.)
  - Connect the shorting wire to the corresponding terminal to enable or disable the filter. Connect the wire to the terminal in the same way as general wiring of the control circuit terminal block. (Refer to page 2-43.)
  - After switching, reinstall the control circuit terminal block as it was.

**NOTES**

Fit the connector or shorting wire to either ON or OFF position.

Enabling (turning ON) the EMC filter increases leakage current. (Refer to page 3-3.)

**WARNING:**

***While power is ON or when the inverter is running, do not open the front cover. Otherwise you may get an electric shock.***

# 3.2 Power supply harmonics

## 3.2.1 Power supply harmonics

The inverter may generate power supply harmonics from its converter circuit to affect the power generator, power factor correction capacitor etc. Power supply harmonics are different from noise and leakage currents in source, frequency band and transmission path. Take the following countermeasure suppression techniques.

### The differences between harmonics and noises

| Item | Harmonics | Noise |
|---|---|---|
| Frequency | Normally 40th to 50th degrees or less (3 kHz or less). | High frequency (several 10 kHz to 1 GHz order). |
| Location | To-electric channel, power impedance. | To-space, distance, wiring path, |
| Quantitative understanding | Theoretical calculation possible. | Random occurrence, quantitative grasping difficult. |
| Generated amount | Nearly proportional to the load capacity. | Changes with the current variation ratio. (Gets larger as switching speed increases.) |
| Affected equipment immunity | Specified by standards per equipment. | Different depending on maker's equipment specifications. |
| Countermeasure | Provide a reactor. | Increase distance. |

***Tab. 3-6:*** *Differences between harmonics and noises*

### Countermeasures

The harmonic current generated from the inverter to the input side differs according to various conditions such as the wiring impedance, whether a reactor is used or not, and output frequency and output current on the load side.

For the output frequency and output current, we understand that this should be calculated in the conditions under the rated load at the maximum operating frequency.

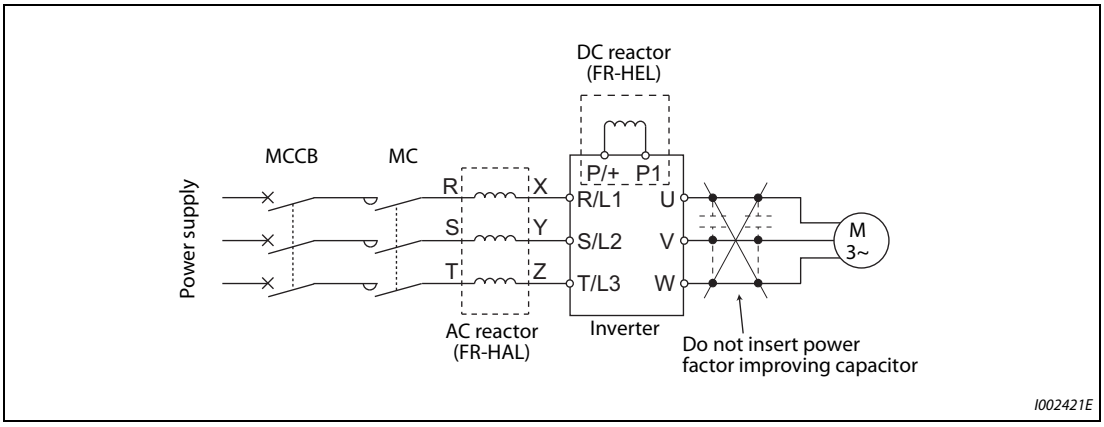


***Fig. 3-9:*** *Reduction of power supply harmonics*

**NOTE**

The power factor improving capacitor and surge suppressor on the inverter output side may be overheated or damaged by the harmonic components of the inverter output. Also, since an excessive current flows in the inverter to activate overcurrent protection, do not provide a capacitor and surge suppressor on the inverter output side when the motor is driven by the inverter. For power factor improvement, install a reactor on the inverter input side or in the DC circuit.

## 3.2.2 Harmonic suppression guidelines in Japan

Harmonic currents flow from the inverter to a power receiving point via a power transformer. The Harmonic Suppression Guidelines was established to protect other consumers from these outgoing harmonic currents.

The three-phase 200 V input specifications 3.7 kW or lower were previously covered by "the Harmonic Suppression Guidelines for Household Appliances and General-purpose Products" and other models were covered by "the Harmonic Suppression Guidelines for Consumers Who Receive High Voltage or Special High Voltage". However, the transistorized inverter has been excluded from the target products covered by "the Harmonic Suppression Guidelines for Household Appliances and General-purpose Products" in January 2004 and "the Harmonic Suppression Guideline for Household Appliances and General-purpose Products" was repealed on September 6, 2004.

All capacity and all models of general-purpose inverter used by specific consumers are now covered by "the Harmonic Suppression Guidelines for Consumers Who Receive High Voltage or Special High Voltage" (hereinafter referred to as "the Specific Consumer Guidelines").

### "Specific Consumer Guidelines"

This guideline sets forth the maximum harmonic currents outgoing from a high-voltage or especially high-voltage receiving consumer who will install, add or renew harmonic generating equipment. If any of the maximum values is exceeded, this guideline requires that consumer to take certain suppression measures.

| Received power voltage | 5th | 7th | 11th | 13th | 17th | 19th | 23rd | Over 23rd |
|---|---|---|---|---|---|---|---|---|
| 6.6 kV | 3.5 | 2.5 | 1.6 | 1.3 | 1.0 | 0.9 | 0.76 | 0.70 |
| 22 kV | 1.8 | 1.3 | 0.82 | 0.69 | 0.53 | 0.47 | 0.39 | 0.36 |
| 33 kV | 1.2 | 0.86 | 0.55 | 0.46 | 0.35 | 0.32 | 0.26 | 0.24 |

***Tab. 3-7:*** *Maximum values of outgoing harmonic currents per 1 kW contract power*

### Application of the specific consumer guidelines

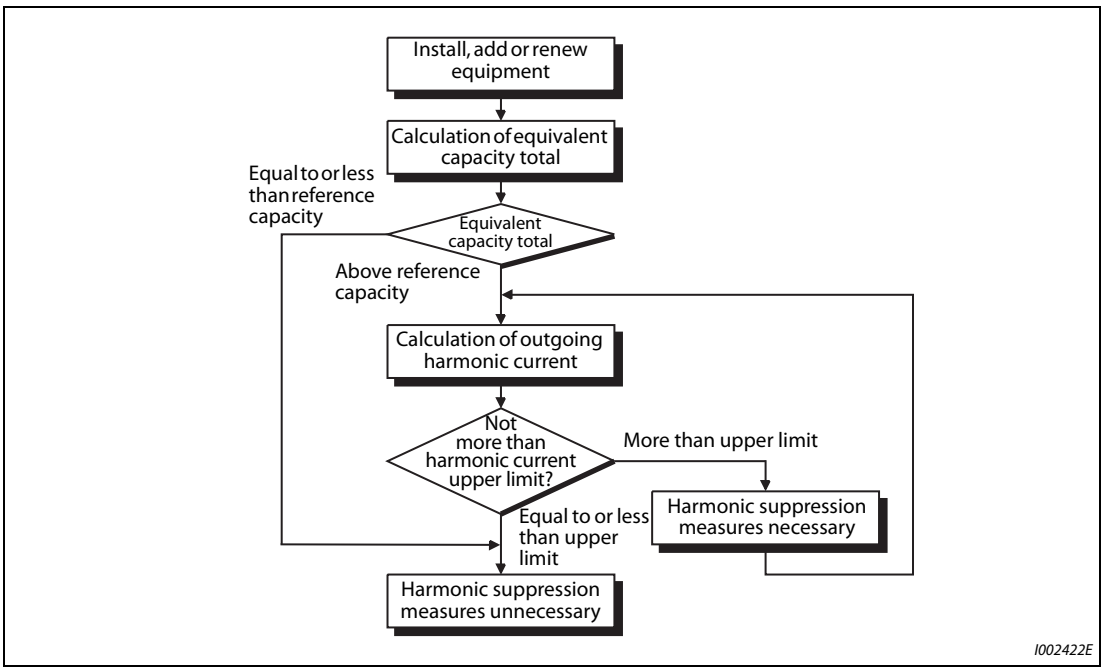


***Fig. 3-10:*** *Application of the specific consumer guidelines*

| Classification | Circuit type | | Conversion coefficient Ki |
|---|---|---|---|
| 3 | Three-phase bridge (Capacitor smoothing) | Without reactor | K31 = 3.4 |
| | | With reactor (AC side) | K32 = 1.8 |
| | | With reactor (DC side) | K33 = 1.8 |
| | | With reactors (AC, DC sides) | K34 = 1.4 |
| 5 | Self-excitation three-phase bridge | When a high power factor converter is used | K5 = 0 |

***Tab. 3-8:*** *Conversion factors for FR-A800 series*

| Received power voltage | Reference capacity |
|---|---|
| 6.6 kV | 50 kVA |
| 22/33 kV | 300 kVA |
| ≥ 66 kV | 2000 kVA |

***Tab. 3-9:*** *Equivalent Capacity Limits*

| Reactor | 5th | 7th | 11th | 13th | 17th | 19th | 23rd | 25th |
|---|---|---|---|---|---|---|---|---|
| Not used | 65 | 41 | 8.5 | 7.7 | 4.3 | 3.1 | 2.6 | 1.8 |
| Used (AC side) | 38 | 14.5 | 7.4 | 3.4 | 3.2 | 1.9 | 1.7 | 1.3 |
| Used (DC side) | 30 | 13 | 8.4 | 5.0 | 4.7 | 3.2 | 3.0 | 2.2 |
| Used (AC, DC sides) | 28 | 9.1 | 7.2 | 4.1 | 3.2 | 2.4 | 1.6 | 1.4 |

***Tab. 3-10:*** *Harmonic content (Values of the fundamental current is 100%)*

- Calculation of equivalent capacity P0 of harmonic generating equipment
  "Equivalent capacity" is the capacity of a 6-pulse converter converted from the capacity of consumer's harmonic generating equipment and is calculated by the following equation: If the sum of equivalent capacities is higher than the limit in tab. 3-9, harmonics must be calculated with the following procedure:

  $P0 = \sum (Ki \times Pi)$ [kVA]

  Ki: Conversion coefficient (refer to tab. 3-8)
  Pi: Rated capacity of harmonic generating equipment ① [kVA]
  i: Number indicating the conversion circuit type

  ① Rated capacity: Determined by the capacity of the applied motor and found in tab. 3-11. The rated capacity used here is used to calculate the generated harmonic amount and is different from the power supply capacity required for actual inverter drive.

● Calculation of outgoing harmonic current

Outgoing harmonic current
= fundamental wave current (value converted from received power voltage)
× operation ratio × harmonic content

– Operation ratio: Operation ratio = actual load factor × operation time ratio during 30 minutes

– Harmonic content: Found in tab. 3-10.

| Applicable motor [kW] | Rated current (A) | | Fundamental wave current converted from 6.6 kV [mA] | Rated capacity [kVA] | Outgoing harmonic current converted from 6.6 kV [mA] (No reactor, 100% operation ratio) | | | | | | | |
|---|---|---|---|---|---|---|---|---|---|---|---|---|
| | 200 V | 400 V | | | 5th | 7th | 11th | 13th | 17th | 19th | 23rd | 25th |
| 0.4 | 1.61 | 0.81 | 49 | 0.57 | 31.85 | 20.09 | 4.165 | 3.773 | 2.107 | 1.519 | 1.274 | 0.882 |
| 0.75 | 2.74 | 1.37 | 83 | 0.97 | 53.95 | 34.03 | 7.055 | 6.391 | 3.569 | 2.573 | 2.158 | 1.494 |
| 1.5 | 5.50 | 2.75 | 167 | 1.95 | 108.6 | 68.47 | 14.20 | 12.86 | 7.181 | 5.177 | 4.342 | 3.006 |
| 2.2 | 7.93 | 3.96 | 240 | 2.81 | 156.0 | 98.40 | 20.40 | 18.48 | 10.32 | 7.440 | 6.240 | 4.320 |
| 3.7 | 13.0 | 6.50 | 394 | 4.61 | 257.1 | 161.5 | 33.49 | 30.34 | 16.94 | 12.21 | 10.24 | 7.092 |
| 5.5 | 19.1 | 9.55 | 579 | 6.77 | 376.1 | 237.4 | 49.22 | 44.58 | 24.90 | 17.95 | 15.05 | 10.42 |
| 7.5 | 25.6 | 12.8 | 776 | 9.07 | 504.4 | 318.2 | 65.96 | 59.75 | 33.37 | 24.06 | 20.18 | 13.97 |
| 11 | 36.9 | 18.5 | 1121 | 13.1 | 728.7 | 459.6 | 95.29 | 86.32 | 48.20 | 34.75 | 29.15 | 20.18 |
| 15 | 49.8 | 24.9 | 1509 | 17.6 | 980.9 | 618.7 | 128.3 | 116.2 | 64.89 | 46.78 | 39.24 | 27.16 |
| 18.5 | 61.4 | 30.7 | 1860 | 21.8 | 1209 | 762.6 | 158.1 | 143.2 | 79.98 | 57.66 | 48.36 | 33.48 |
| 22 | 73.1 | 36.6 | 2220 | 25.9 | 1443 | 910.2 | 188.7 | 170.9 | 95.46 | 68.82 | 57.72 | 39.96 |
| 30 | 98.0 | 49.0 | 2970 | 34.7 | 1931 | 1218 | 252.5 | 228.7 | 127.7 | 92.07 | 77.22 | 53.46 |
| 37 | 121 | 60.4 | 3660 | 42.8 | 2379 | 1501 | 311.1 | 281.8 | 157.4 | 113.5 | 95.16 | 65.88 |
| 45 | 147 | 73.5 | 4450 | 52.1 | 2893 | 1825 | 378.3 | 342.7 | 191.4 | 138.0 | 115.7 | 80.10 |
| 55 | 180 | 89.9 | 5450 | 63.7 | 3543 | 2235 | 463.3 | 419.7 | 234.4 | 169.0 | 141.7 | 98.10 |

***Tab. 3-11:*** *Rated capacities and outgoing harmonic currents of inverter-driven motors*

| Applicable motor [kW] | Rated current (A) | | Fundamental wave current converted from 6.6 kV [mA] | Rated capacity [kVA] | Outgoing harmonic current converted from 6.6 kV [mA] (With a DC reactor, 100% operation ratio) | | | | | | | |
|---|---|---|---|---|---|---|---|---|---|---|---|---|
| | 200 V | 400 V | | | 5th | 7th | 11th | 13th | 17th | 19th | 23rd | 25th |
| 75 | 245 | 123 | 7455 | 87.2 | 2237 | 969 | 626 | 373 | 350 | 239 | 224 | 164 |
| 90 | 293 | 147 | 8909 | 104 | 2673 | 1158 | 748 | 445 | 419 | 285 | 267 | 196 |
| 110 | 357 | 179 | 10848 | 127 | 3254 | 1410 | 911 | 542 | 510 | 347 | 325 | 239 |
| 132 | — | 216 | 13091 | 153 | 3927 | 1702 | 1100 | 655 | 615 | 419 | 393 | 288 |
| 160 | — | 258 | 15636 | 183 | 4691 | 2033 | 1313 | 782 | 735 | 500 | 469 | 344 |
| 220 | — | 355 | 21515 | 252 | 6455 | 2797 | 1807 | 1076 | 1011 | 688 | 645 | 473 |
| 250 | — | 403 | 24424 | 286 | 7327 | 3175 | 2052 | 1221 | 1148 | 782 | 733 | 537 |
| 280 | — | 450 | 27273 | 319 | 8182 | 3545 | 2291 | 1364 | 1282 | 873 | 818 | 600 |
| 315 | — | 506 | 30667 | 359 | 9200 | 3987 | 2576 | 1533 | 1441 | 981 | 920 | 675 |
| 355 | — | 571 | 34606 | 405 | 10382 | 4499 | 2907 | 1730 | 1627 | 1107 | 1038 | 761 |
| 400 | — | 643 | 38970s | 456 | 11691 | 5066 | 3274 | 1949 | 1832 | 1247 | 1169 | 857 |
| 450 | — | 723 | 43818 | 512 | 13146 | 5696 | 3681 | 2191 | 2060 | 1402 | 1315 | 964 |
| 500 | — | 804 | 48727 | 570 | 14618 | 6335 | 4093 | 2436 | 2290 | 1559 | 1462 | 1072 |
| 560 | — | 900 | 54545 | 638 | 16364 | 7091 | 4582 | 2727 | 2564 | 1746 | 1636 | 1200 |

***Tab. 3-12:*** *Rated capacities and outgoing harmonic currents of inverter-driven motors*

- Determining if a countermeasure is required

  A countermeasure for harmonics is required if the following condition is satisfied:

  Outgoing harmonic current > maximum value per 1 kW contract power × contract power

- Harmonic suppression techniques

| No. | Item | Description |
|---|---|---|
| ❶ | Reactor installation (FR-HAL, FR-HEL) | Install an AC reactor (FR-HAL) on the AC side of the inverter or a DC reactor (FR-HEL) on its DC side, or install both to suppress outgoing harmonic currents. |
| ❷ | High power factor converter (FR-HC2) | This converter trims the current waveform to be a sine waveform by switching the rectifier circuit (converter module) with transistors. Doing so suppresses the generated harmonic amount significantly. Connect it to the DC area of an inverter. Use the high power factor converter (FR-HC2) with the accessories that come as standard. |
| ❸ | Installation of power factor improving capacitor | When used with a reactor connected in series, the power factor improving correction capacitor can absorb harmonic currents. |
| ❹ | Transformer multi-phase operation | Use two transformers with a phase angle difference of 30° as in 人-Δ and Δ-Δ combinations to provide an effect corresponding to 12 pulses, reducing low-degree harmonic currents. |
| ❺ | Passive filter (AC filter) | A capacitor and a reactor are used together to reduce impedances at specific frequencies. Harmonic currents are expected to be absorbed greatly by using this technique. |
| ❻ | Active filter | This filter detects the current in a circuit generating a harmonic current and generates a harmonic current equivalent to a difference between that current and a fundamental wave current to suppress the harmonic current at the detection point. Harmonic currents are expected to be absorbed greatly by using this technique. |

***Tab. 3-13:*** *Suppression of harmonics*

# 3.3 Installation of a reactor

When the inverter is connected near a large-capacity power transformer (≥ 1000 kVA) or when a power factor correction capacitor is to be switched over, an excessive peak current may flow in the power input circuit, damaging the converter circuit. To prevent this, always install an optional AC reactor (FR-HAL).

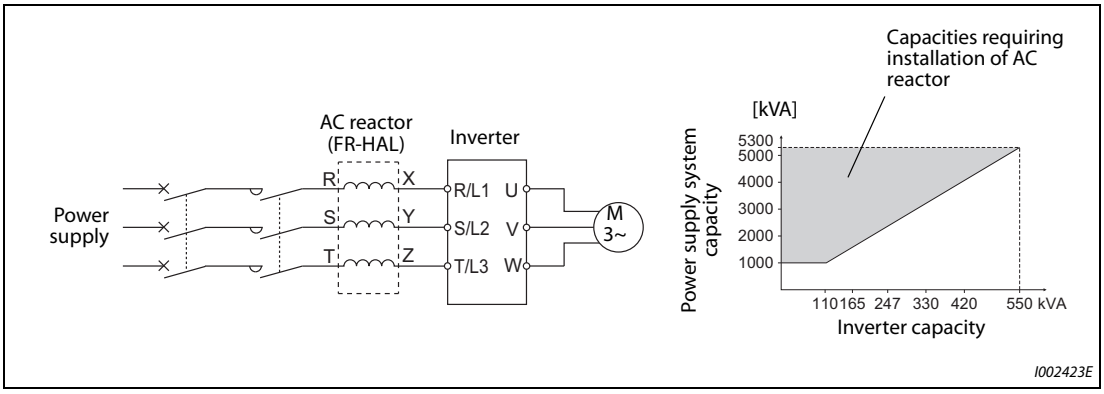


***Fig. 3-11:*** *Installation of a reactor*

## 3.4 Power-OFF and magnetic contactor (MC)

**Inverter input side magnetic contactor (MC)**

On the inverter input side, it is recommended to provide an MC for the following purposes:
(Refer to page 2-4 for selection.)

- To disconnect the inverter from the power supply at activation of a protective function or at malfunctioning of the driving system (emergency stop, etc.). For example, an MC prevents overheat or burnout of the brake resistor when heat capacity of the resistor is insufficient or brake regenerative transistor is damaged with short while connecting an optional brake resistor.
- To prevent any accident due to an automatic restart at power restoration after an inverter stop made by a power failure.
- To separate the inverter from the power supply to ensure safe maintenance and inspection work.

If using an MC for emergency stop during operation, select an MC regarding the inverter input side current as JEM1038-AC-3 class rated current.

**NOTE**

Since repeated inrush currents at power ON will shorten the life of the converter circuit (switching life is about 1,000,000 times), frequent starts and stops of the magnetic contactor must be avoided. Turn ON/OFF the inverter start controlling terminals (STF, STR) to run/stop the inverter.

**Example ▽** Inverter start/stop circuit example

As shown below, always use the start signal (ON or OFF of STF(STR) signal) to make a start or stop.

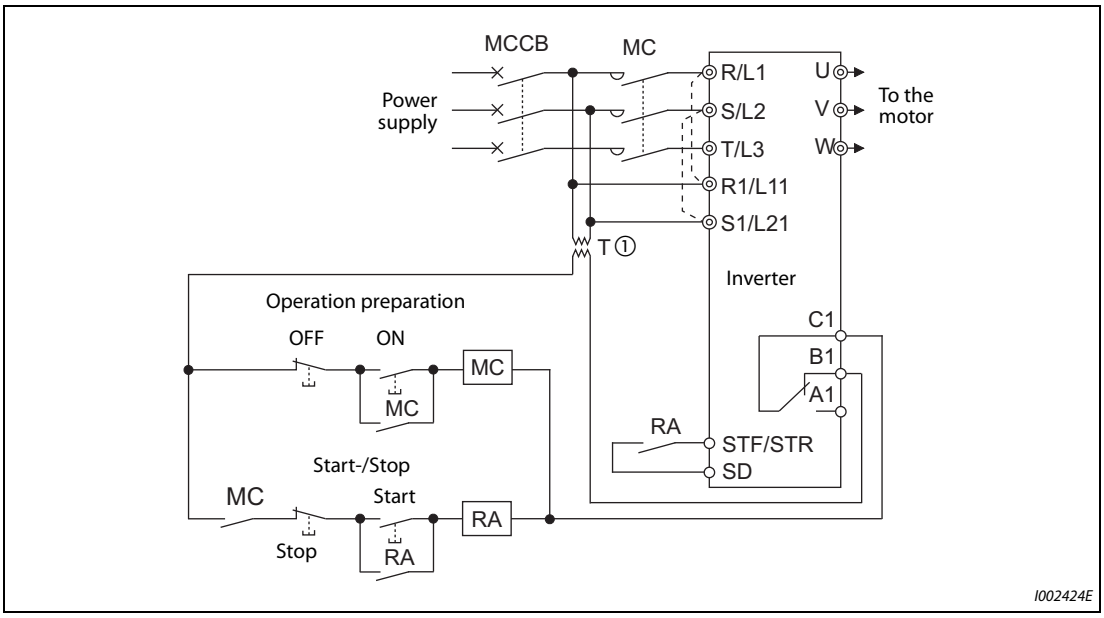


***Fig. 3-12:*** *Start and stop of the inverter*

① When the power supply is 400 V class, install a stepdown transformer.

② Connect the power supply terminals R1/L11, S1/L21 of the control circuit to the input side of the MC to hold an alarm signal when the inverter's protective circuit is activated. At this time, remove jumpers across terminals R/L1 and R1/L11 and S/L2 and S1/L21. (Refer to page 2-48 for removal of the jumper.)

△

**Handling of the magnetic contactor on the inverter's output side**

Switch the magnetic contactor between the inverter and motor only when both the inverter and motor are at a stop. When the magnetic contactor is turned ON while the inverter is operating, overcurrent protection of the inverter and such will activate. When an MC is provided to switch to a commercial power supply, for example, it is recommended to use the electronic bypass function Pr. 35 to Pr. 139 (refer to page 5-457). (The commercial power supply operation is not available with vector control dedicated motors (SF-V5RU, SF-THY) nor with PM motors.)

**Handling of the manual contactor on the inverter's output side**

A PM motor is a synchronous motor with high-performance magnets embedded inside. High-voltage is generated at the motor terminals while the motor is running even after the inverter power is turned OFF. In an application where the PM motor is driven by the load even after the inverter is powered OFF, a low-voltage manual contactor must be connected at the inverter's output side.

**NOTES**

Before wiring or inspection for a PM motor, confirm that the PM motor is stopped. In an application, such as fan and blower, where the motor is driven by the load, a low-voltage manual contactor must be connected at the inverter's output side, and wiring and inspection must be performed while the contactor is open. Otherwise you may get an electric shock.

Do not open or close the contactor while the inverter is running (outputting).

# 3.5 Countermeasures against deterioration of the 400 V class motor insulation

In the PWM type inverter, a surge voltage attributable to wiring constants is generated at the motor terminals. Especially in a 400 V class motor, the surge voltage may deteriorate the insulation. When the 400 V class motor is driven by the inverter, consider the following countermeasures:

**Countermeasures (With induction motor)**

It is recommended to take one of the following countermeasures:

- Rectifying the motor insulation and limiting the PWM carrier frequency according to the wiring length
  For the 400 V class motor, use an **insulation-enhanced motor.** Specifically:
  - Order a "400 V class inverter-driven insulation-enhanced motor".
  - For the dedicated motor such as the constant-torque motor and low-vibration motor, use an "inverter-driven dedicated motor".
  - Set Pr. 72 "PWM frequency selection" as indicated below according to the wiring length.

| | Wiring length | | |
|---|---|---|---|
| | **50 m or shorter** | **50 m to 100 m** | **Longer than 100 m** |
| Pr. 72 "PWM frequency selection" | ≤ 15 (14.5 kHz) | ≤ 9 (9 kHz) | ≤ 4 (4 kHz) |

***Tab. 3-14:*** *Setting of Pr. 72 according to the wiring length*

- Suppressing the surge voltage on the inverter side
  - For the FR-A840-01800(55K) or lower, connect the surge voltage suppression filter (FR-ASF-H/FR-BMF-H) to the output side.
  - For the FR-A840-02160(75K) or higher, connect the sine wave filter (MT-BSL/BSC) to the output side.

**Countermeasures (With PM motor)**

When the wiring length exceeds 50 m, set "9" (6 kHz) or less in Pr. 72 "PWM frequency selection".

**NOTES**

For the details of Pr. 72 "PWM frequency selection", refer to page 5-211. (When using an optional sine wave filter (MT-BSL/BSC), set "25" (2.5 kHz) in Pr. 72.)

For the details of the surge voltage suppression filter (FR-ASF-H/FR-BMF-H) and the sine wave filter (MT-BSL/BSC), refer to the Instruction Manual of each option.

A surge voltage suppression filter (FR-ASF-H/FR-BMF-H) can be used under V/F control and Advanced magnetic flux vector control.
A sine wave filter (MT-BSL/BSC) can be used under V/F control. Do not use the filters under different control modes.

The carrier frequency is limited during PM sensorless vector control. (Refer to page 5-211.)

# 3.6 Checklist before starting operation

The FR-A800 series inverter is a highly reliable product, but incorrect peripheral circuit making or operation/handling method may shorten the product life or damage the product.

Before starting operation, always recheck the following points.

| Checkpoint | Countermeasure | Refer to page | Check by user |
|---|---|---|---|
| Crimping terminals are insulated. | Use crimping terminals with insulation sleeves to wire the power supply and the motor. | — | |
| The wiring between the power supply (R/L1, S/L2, T/L3) and the motor (U, V, W) is correct. | Application of power to the output terminals (U, V, W) of the inverter will damage the inverter. Never perform such wiring. | 2-25 | |
| No wire offcuts are left from the time of wiring. | Wire offcuts can cause an alarm, failure or malfunction. Always keep the inverter clean.<br>When drilling mounting holes in an enclosure etc., take caution not to allow chips and other foreign matter to enter the inverter. | — | |
| The main circuit cable gauge is correctly selected. | Use an appropriate cable gauge to suppress a voltage drop to 2% or less.<br>If the wiring distance is long between the inverter and motor, a voltage drop in the main circuit will cause the motor torque to decrease especially during the output of a low frequency. | 2-29 | |
| The total wiring length is within the specified length. | Keep the total wiring length within the specified length.<br>In long distance wiring, charging currents due to stray capacitance in the wiring may degrade the fast-response current limit operation or cause the equipment on the inverter's output side to malfunction. Pay attention to the total wiring length. | 2-29 | |
| Countermeasures are taken against EMI. | The input/output (main circuit) of the inverter includes high frequency components, which may interfere with the communication devices (such as AM radios) used near the inverter. In such case, activate the EMC filter (turn ON the EMC filter ON/OFF connector) to minimize interference. | 3-9 | |
| On the inverter's output side, none of the power factor correction capacitor, surge suppressor, or radio noise filter is installed. | Such installation will cause the inverter to trip or the capacitor and surge suppressor to be damaged. If any of the above devices is connected, immediately remove it. | — | |
| When performing an inspection or rewiring on the product that has been energized once, the operator has waited long enough after shutting off the power supply. | For a short time after the power-OFF, a high voltage remains in the smoothing capacitor, and it is dangerous.<br>Before performing an inspection or rewiring, wait 10 minutes or longer after the power supply turns OFF, then confirm that the voltage across the main circuit terminals P/+ and N/- of the inverter is low enough using a tester, etc. | — | |
| The inverter's output side has no short circuit or ground fault occurring. | • A short circuit or ground fault on the inverter's output side may damage the inverter module.<br>• Fully check the insulation resistance of the circuit prior to inverter operation since repeated short circuits caused by peripheral circuit inadequacy or a ground fault caused by wiring inadequacy or reduced motor insulation resistance may damage the inverter module.<br>• Fully check the to-earth (ground) insulation and phase-to-phase insulation of the inverter's output side before power-ON. Especially for an old motor or use in hostile atmosphere, make sure to check the motor insulation resistance, etc. | — | |

***Tab. 3-15:*** *Checklist before starting operation (1)*

| Checkpoint | Countermeasure | Refer to page | Check by user |
|---|---|---|---|
| The circuit is not configured to use the inverter's input-side magnetic contactor to start/stop the inverter frequently. | Since repeated inrush currents at power ON will shorten the life of the converter circuit, frequent starts and stops of the magnetic contactor must be avoided. Turn ON/OFF the inverter's start signals (STF, STR) to run/stop the inverter. | 3-9 | |
| A mechanical brake is not connected across terminals P/+ and PR. | Across terminals P/+ and PR, connect only an external brake resistor. | 2-76 | |
| The voltage applied to the inverter I/O signal circuits is within the specifications. | Application of a voltage higher than the permissible voltage to the inverter I/O signal circuits or opposite polarity may damage the I/O devices. Especially check the wiring to prevent the speed setting potentiometer from being connected incorrectly to short circuit the terminals 10E and 5. | 2-36 | |
| When using the electronic bypass operation, electrical and mechanical interlocks are provided between the electronic bypass contactors MC1 and MC2. | When using a switching circuit as shown below, chattering due to mis-configured sequence or arc generated at switching may allow undesirable current to flow in and damage the inverter. Mis-wiring may also damage the inverter.<br>(The commercial power supply operation is not available with vector control dedicated motors (SF-V5RU, SF-THY) nor with PM motors.)<br> 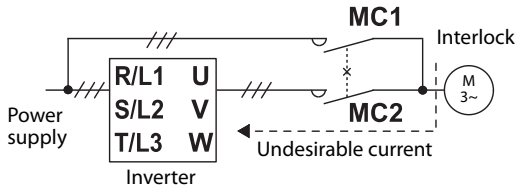 <br><br>When switching to the commercial power supply operation while a failure such as an output short circuit has occurred between the magnetic contactor MC2 and the motor, the damage may further spread. If a failure has occurred between the MC2 and the motor, a protection circuit such as using the OH signal input must be provided | 5-457 | |
| A countermeasure is provided for power restoration after a power failure. | If the machine must not be restarted when power is restored after a power failure, provide an MC in the inverter's input side and also make up a sequence which will not switch ON the start signal. If the start signal (start switch) remains ON after a power failure, the inverter will automatically restart as soon as the power is restored. | — | |
| When using the vector control, the encoder is properly installed. | The encoder must be directly connected to a motor shaft without any backlash. (Real sensorless vector control, PM sensorless vector control do not require an encoder.) | 2-61 | |
| A magnetic contactor (MC) is installed on the inverter's input side. | On the inverter's input side, connect an MC for the following purposes:<br>• To disconnect the inverter from the power supply at activation of a protective function or at malfunctioning of the driving system (emergency stop, etc.).<br>• To prevent any accident due to an automatic restart at power restoration after an inverter stop made by a power failure.<br>• To separate the inverter from the power supply to ensure safe maintenance and inspection work.<br>If using an MC for emergency stop during operation, select an MC regarding the inverter input side current as JEM1038-AC-3 class rated current. | 3-17 | |
| The magnetic contactor on the inverter's output side is properly handled. | Switch the magnetic contactor between the inverter and motor only when both the inverter and motor are at a stop. | 3-17 | |

***Tab. 3-15:*** *Checklist before starting operation (2)*

| Checkpoint | Countermeasure | Refer to page | Check by user |
|---|---|---|---|
| When using a PM motor, a low-voltage manual contactor is installed on the inverter's output side. | When a failure occurs between the MC2 and motor, make sure to provide a protection circuit, such as using the OH signal input.<br>In an application, such as fan and blower, where the motor is driven by the load, a low-voltage manual contactor must be connected at the inverter's output side, and wiring and inspection must be performed while the contactor is open. Otherwise you may get an electric shock. | 3-17 | |
| An EMI countermeasure is provided for the frequency setting signals. | If electromagnetic noise generated from the inverter causes frequency setting signal to fluctuate and the motor rotation speed to be unstable when changing the motor speed with analog signals, the following countermeasures are effective:<br>• Do not run the signal cables and power cables (inverter I/O cables) in parallel with each other and do not bundle them.<br>• Run signal cables as far away as possible from power cables (inverter I/O cables).<br>• Use shielded cables.<br>• Install a ferrite core on the signal cable (Example: ZCAT3035-1330 by TDK). | 3-6 | |
| A countermeasure is provided for an overload operation. | When performing frequent starts/stops by the inverter, rise/fall in the temperature of the transistor element of the inverter will repeat due to a repeated flow of large current, shortening the life from thermal fatigue. Since thermal fatigue is related to the amount of current, the life can be increased by reducing current at locked condition, starting current, etc. Reducing current may extend the service life but may also cause torque shortage, which leads to a start failure. Adding a margin to the current can eliminate such a condition. For an induction motor, use an inverter of a higher capacity (up to two ranks). For a PM motor, use an inverter and PM motor of higher capacities. | — | |
| The specifications and rating match the system requirements. | Make sure that the specifications and rating match the system requirements. | 8-1 | |

***Tab. 3-15:*** *Checklist before starting operation (3)*

# 3.7 Failsafe system which uses the inverter

When a fault is detected by the protective function, the protective function activates and outputs a fault signal. However, a fault signal may not be output at an inverter's fault occurrence when the detection circuit or output circuit fails, etc. Although Mitsubishi assures the best quality products, provide an interlock which uses inverter status output signals to prevent accidents such as damage to the machine when the inverter fails for some reason.

Also at the same time consider the system configuration where a failsafe from outside the inverter, without using the inverter, is enabled even if the inverter fails.

### Interlock method which uses the inverter status output signals

By combining the inverter output signals to provide an interlock as shown below, an inverter failure can be detected.

| No. | Interlock method | Check method | Used signals | Refer to page |
|---|---|---|---|---|
| ❶ | Inverter protective function operation | Operation check of an alarm contact.<br>Circuit error detection by negative logic. | Fault output signal (ALM signal) | 5-360 |
| ❷ | Inverter operating status | Operation ready signal check. | Operation ready signal (RY signal) | 5-356 |
| ❸ | Inverter running status | Logic check of the start signal and running signal. | Start signal (STF signal, STR signal)<br>Running signal (RUN signal) | 5-356,<br>5-417 |
| ❹ | Inverter running status | Logic check of the start signal and output current. | Start signal (STF signal, STR signal)<br>Output current detection signal (Y12 signal) | 5-365,<br>5-417 |

***Tab. 3-16:*** *Different output signals of the frequency inverter can be used for interlocks*

❶ Checking by the output of the inverter fault signal

When the inverter's protective function activates and the inverter trips, the fault output signal (ALM signal) is output. (ALM signal is assigned to terminal A1B1C1 in the initial setting).
With this signal, check that the inverter operates properly.
In addition, negative logic can be set. (ON when the inverter is normal, OFF when the fault occurs.)

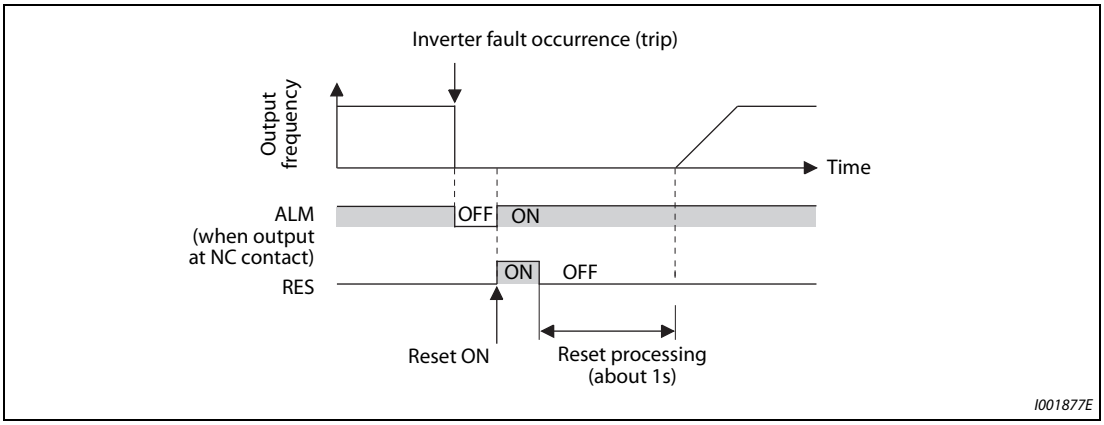


***Fig. 3-13:*** *Contact B1-C1 opens when a fault occurs (initial setting)*

❷ Checking the inverter operating status by the inverter operation ready completion signal

Operation ready signal (RY signal) is output when the inverter power is ON and the inverter becomes operative. Check if the RY signal is output after powering ON the inverter.

❸ Checking the inverter operating status by the start signal input to the inverter and inverter running signal

The inverter running signal (RUN signal) is output when the inverter is running. (RUN signal is assigned to terminal RUN in the initial setting.)

Check if RUN signal is being output while inputting a start signal to the inverter. (STF signal is a forward rotation signal, and STR is a reverse rotation signal.) Even after the start signal is turned OFF, the RUN signal is kept output until the inverter makes the motor to decelerate and to stop. For the logic check, configure a sequence considering the inverter's deceleration time.

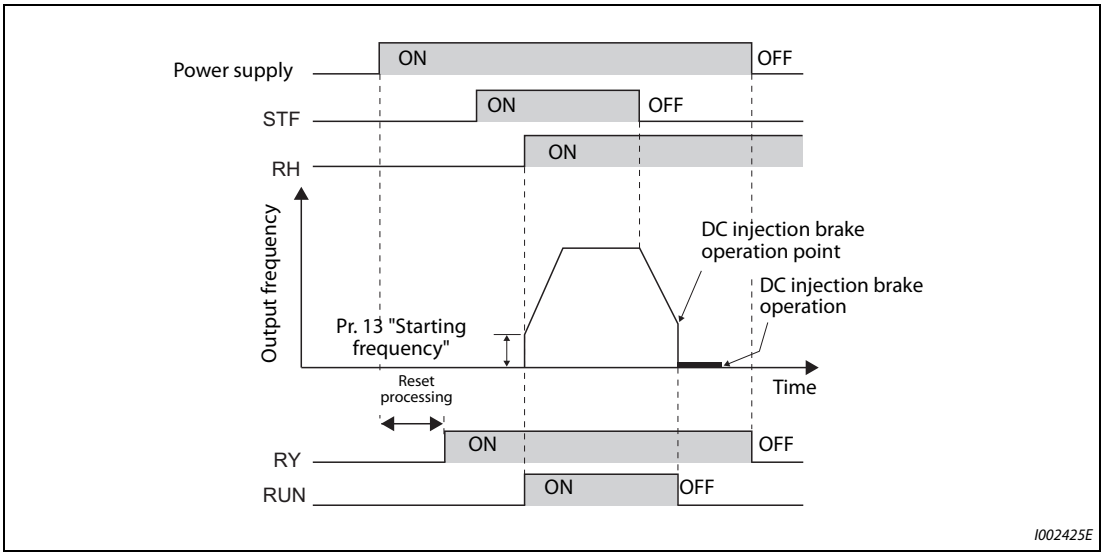


***Fig. 3-14:*** *Ready status and motor running*

❹ Checking the motor operating status by the start signal input to the inverter and inverter output current detection signal

The output current detection signal (Y12 signal) is output when the inverter operates and currents flow in the motor.

Check if Y12 signal is being output while inputting a start signal to the inverter. (STF signal is a forward rotation signal, and STR is a reverse rotation signal.) The Y12 signal is initially set to be output at 150% rated inverter current. Adjust the level to around 20% using no load current of the motor as reference with Pr. 150 "Output current detection level".

Like the inverter running signal (RUN signal), even after the start signal is turned OFF, the Y12 signal is kept output until the inverter stops the output to a decelerating motor. For the logic check, configure a sequence considering the inverter's deceleration time.

– When using various signals, assign the functions to Pr. 190 to Pr. 196 (output terminal function selection) referring to the table below.

| Output signal | Pr. 190 to Pr. 196 setting | |
|---|---|---|
| | Positive logic | Negative logic |
| ALM | 99 | 199 |
| RY | 11 | 111 |
| RUN | 0 | 100 |
| Y12 | 12 | 112 |

***Tab. 3-17:*** *Setting in positive and negative logic*

**NOTE**

Changing the terminal assignment using Pr. 190 to Pr. 196 (output terminal function selection) may affect the other functions. Set parameters after confirming the function of each terminal.

**Backup method outside the inverter**

Even if the interlock is provided by the inverter status signal, enough failsafe is not ensured depending on the failure status of the inverter itself. For example, if an inverter CPU fails in a system interlocked with the inverter's fault, start, and RUN signals, no fault signal will be output and the RUN signal will be kept ON because the inverter CPU is down.

Provide a speed detector to detect the motor speed and current detector to detect the motor current and consider the backup system such as performing a check as below according to the level of importance of the system.

- Start signal and actual operation check

  Check the motor running and motor current while the start signal is input to the inverter by comparing the start signal to the inverter and detected speed of the speed detector or detected current of the current detector.

  Note that the current is flowing through the motor while the motor coasts to stop, even after the inverter's start signal is turned OFF. For the logic check, configure a sequence considering the inverter's deceleration time. In addition, it is recommended to check the three-phase current when using the current detector.

- Command speed and actual operation check

  Check for a gap between the actual speed and commanded speed by comparing the inverter's speed command and the speed detected by the speed detector.

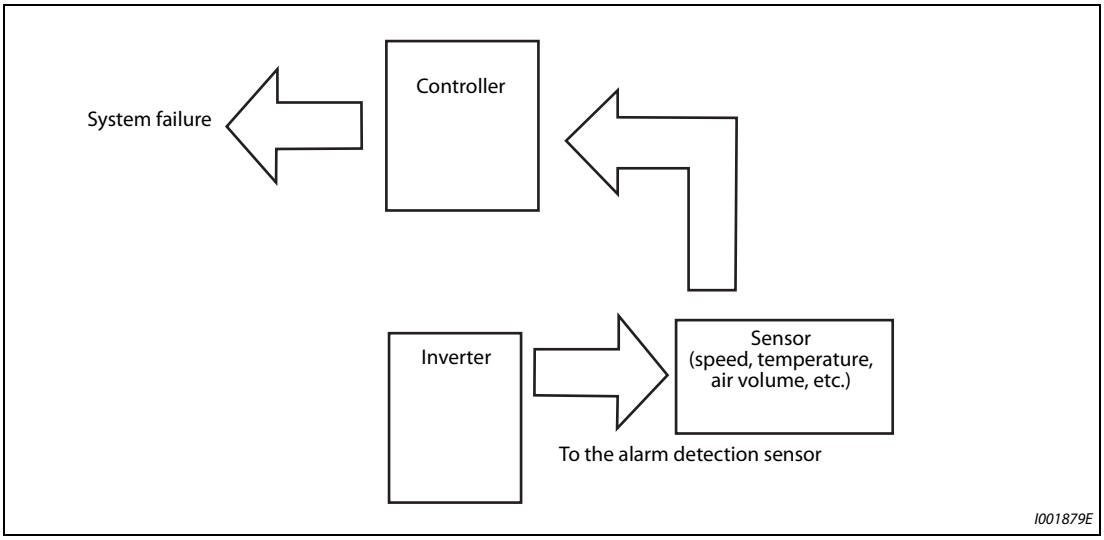


***Fig. 3-15:*** *Backup method outside the inverter*

# 4 Basic operation

## 4.1 Operation panel (FR-DU08)

### 4.1.1 Components of the operation panel (FR-DU08)

To mount the operation panel (FR-DU08) on the enclosure surface, refer to page 2-57.

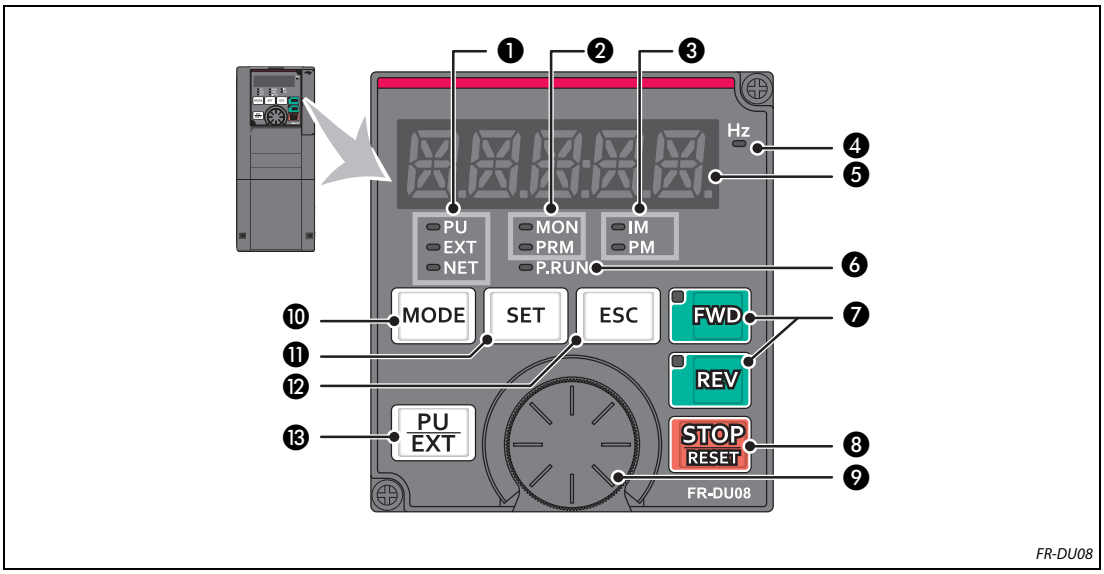


***Fig. 4-1:*** *Operation panel FR-DU08*

| No. | Component | Name | Description |
|---|---|---|---|
| ❶ | PU<br>EXT<br>NET | Operation mode indicator | PU: Lit to indicate the PU operation mode.<br>EXT: Lit to indicate the External operation mode. (Lit at power-ON in the initial setting.)<br>NET: Lit to indicate the Network operation mode.<br>PU and EXT: Lit to indicate the External/PU combined operation mode 1 or 2. |
| ❷ | MON<br>PRM | Operation panel status indicator | MON: Lit to indicate the monitoring mode. Quickly flickers twice intermittently while the protective function is activated. Slowly flickers in the display-off mode.<br>PRM: Lit to indicate the parameter setting mode. |
| ❸ | IM<br>PM | Control motor indicator | IM: Lit to indicate the induction motor control.<br>PM: Lit to indicate the PM sensorless vector control.<br>The indicator flickers when test operation is selected. |
| ❹ | Hz | Frequency unit indicator | Lit to indicate frequency.<br>(Flickers when the set frequency is displayed in the monitor.) |
| ❺ | | Monitor (5-digit LED) | Shows the frequency, parameter number, etc.<br>(Using Pr. 52, Pr. 774 to Pr. 776, the monitored item can be changed.) |
| ❻ | P.RUN | PLC function indicator | Lit to indicate that the sequence program can be executed. |
| ❼ | FWD<br>REV | FWD key, REV key | FWD key: Starts forward rotation. The LED is lit during forward operation.<br>REV key: Starts reverse rotation. The LED is lit during reverse operation.<br>The LED flickers under the following conditions:<br>• When the frequency command is not given even if the forward/reverse command is given.<br>• When the frequency command is the starting frequency or lower.<br>• When the MRS signal is being input. |
| ❽ | STOP<br>RESET | STOP/RESET key | Stops the operation commands.<br>Resets the inverter when the protection function is activated. |
| ❾ | | Setting dial | The setting dial of the Mitsubishi inverters. The setting dial is used to change the frequency and parameter settings.<br>Press the setting dial to perform the following operations:<br>• To display a set frequency in the monitoring mode (the setting can be changed using Pr. 992)<br>• To display the present setting during calibration<br>• To display a fault history number in the faults history mode |
| ❿ | MODE | MODE key | Switches to different modes.<br>Switches to the easy setting mode by pressing simultaneously with PU/EXT key.<br>Holding this key for 2 seconds locks the operation. The key lock is invalid when Pr. 161 = "0 (initial setting)". (Refer to page 5-190 ) |
| ⓫ | SET | SET key | Enters each setting.<br>If pressed during operation, the monitored item changes.<br>When the initial setting is set:<br>Output frequency → Output current → Output voltage<br>(Using Pr. 52 and Pr. 774 to Pr. 776, the monitored item can be changed.) |
| ⓬ | ESC | ESC key | Goes back to the previous display.<br>Holding this key for a longer time changes the mode back to the monitor mode. |
| ⓭ | PU<br>EXT | PU/EXT key | Switches between the PU operation mode, the PU JOG operation mode and the External operation mode.<br>Switches to the easy setting mode by pressing simultaneously with MODE key.<br>Cancels the PU stop also. |

***Tab. 4-1:*** *Components of the operation panel (FR-DU08)*

## 4.1.2 Basic operation of the operation panel

### Basic operation

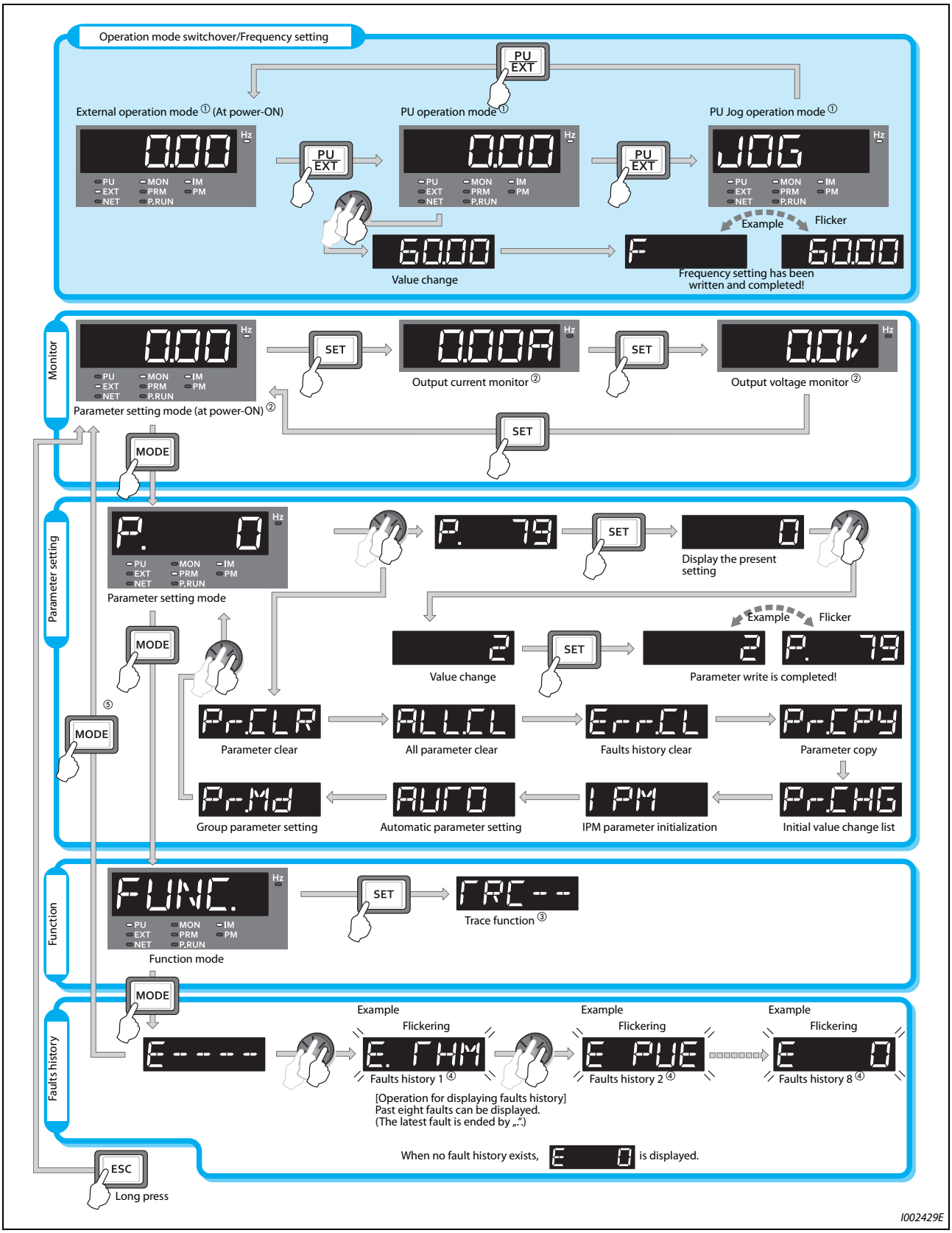


***Fig. 4-2:*** *Overview of the basic functions of the operation panel*

① For the details of operation modes, refer to page 5-255.
② Monitored items can be changed. (Refer to page 5-317.)
③ For the details of the trace function, refer to page 5-568.
④ For the details of faults history, refer to page 6-9.
⑤ The USB memory mode will appear if a USB memory device is connected. (Refer to page 2-58.)

**Parameter setting mode**

In the parameter setting mode, inverter functions (parameters) are set.

The following table explains the indications in the parameter setting mode.

| Operation panel indication | Function name | Description | Refer to page |
|---|---|---|---|
| P. | Parameter setting mode | Under this mode, the set value of the displayed parameter number is read or changed. | 4-6 |
| Pr.CLR | Parameter clear | Clears and resets parameter settings to the initial values. Calibration parameters and offline auto tuning parameters are not cleared.<br>The communication parameters are not cleared.<br>For the details of the uncleared parameters, refer to page A-5. | 5-676 |
| ALL.CL | Parameter all clear | Clears and resets parameter settings to the initial values. Calibration parameters and the offline auto tuning parameters are also cleared.<br>The communication parameters are not cleared.<br>For the details of the uncleared parameters, refer to page A-5. | 5-676 |
| Err.CL | Faults history clear | Deletes the faults history. | 6-3 |
| Pr.CPY | Parameter copy | Copies the parameter settings saved in the inverter to the operation panel. The parameters copied to the operation panel can be also copied to other inverters. | 5-677 |
| Pr.CHG | Initial value change list | Identifies the parameters that have been changed from their initial settings. | 5-684 |
| IPM | IPM initialization | Changes the parameters to the settings required to drive an IPM motor (MM-CF) as a batch.<br>Also changes the parameters back to the settings required to drive an induction motor. | 5-69 |
| AUTO | Automatic parameter setting | Changes parameter settings as a batch. The target parameters include communication parameters for the Mitsubishi's human machine interface (GOT) connection and the parameters for the rated frequency settings of 50 Hz/ 60 Hz. | 5-203 |
| Pr.Md | Group parameter setting | Displays parameter numbers by function groups. | 5-32 |

***Tab. 4-2:*** *Indications in the parameter setting mode*

### 4.1.3 Correspondences between digital and actual characters

There are the following correspondences between the actual alphanumeric characters and the digital characters displayed on the operation panel:

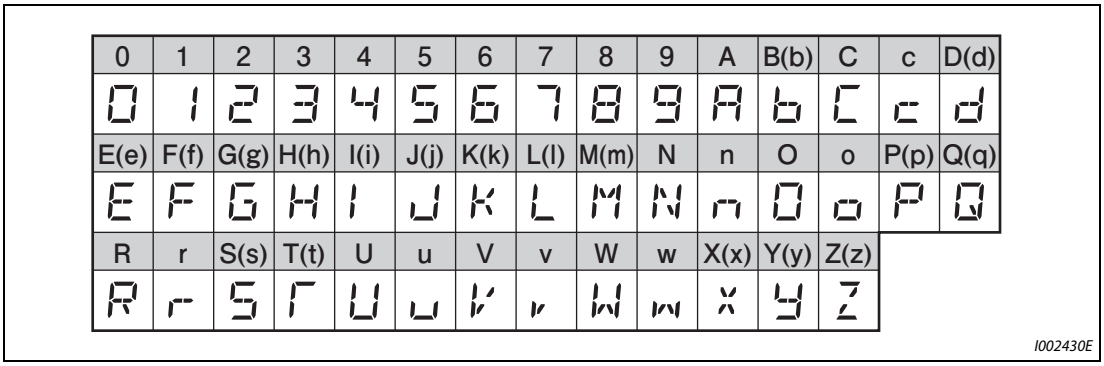


***Fig. 4-3:*** *Correspondences between digital and actual characters (operation panel)*

### 4.1.4 Changing the parameter setting value

**Example ▽** Changing example: Change the Pr. 1 "Maximum frequency".

| Operation |
|---|
| ① Screen at power-ON<br>The monitor display appears. |
| ② Changing the operation mode<br>Press [PU/EXT] to choose the PU operation mode. [PU] indicator is lit. |
| ③ Parameter setting mode<br>Press [MODE] to choose the parameter setting mode. (The parameter number read previously appears.) |
| ④ Selecting the parameter number<br>Turn ⊛ until P. 1 (Pr. 1) appears. Press [SET] to read the present set value.<br>" 120.00" (initial value) appears. |
| ⑤ Changing the setting value<br>Turn ⊛ to change the set value to "60.00". Press [SET] to enter the setting.<br>"60.00" and "P. 1" flicker alternately.<br>• Turn ⊛ to read another parameter.<br>• Press [SET] to show the setting again.<br>• Press [SET] twice to show the next parameter.<br>• Press [MODE] three times to return to the monitor display of the frequency. |

***Tab. 4-3:*** *Setting the maximum output frequency*

**Er. 1 to Er. 4 are displayed... Why?**

- Er. 1 appears .....Write disable error
- Er. 2 appears .....Write error during operation
- Er. 3 appears .....Calibration error
- Er. 4 appears .....Mode designation error

For details, refer to page 6-9.

△

**NOTE** When Pr. 77 "Parameter write selection" = "0 (initial setting)", the parameter setting change is only available while the inverter is stopped under the PU operation mode.
To enable the parameter setting change while the inverter is running or under the operation mode other than PU operation mode, change the Pr. 77 setting. (Refer to page 5-195)

# 4.2 Monitoring the inverter status

## 4.2.1 Monitoring of output current and output voltage

**NOTE** Pressing the SET key in the monitor mode switches the monitored item to output frequency, output current, and then to output voltage.

| Operation |
|---|
| ① Press MODE during operation to monitor the output frequency.<br>[Hz] indicator turns ON. |
| ② Press SET to monitor the output current.<br>This operation is valid during running or stopping under any operation mode.<br>[A] indicator turns ON. |
| ③ Press SET to monitor the output voltage.<br>[V] indicator turns ON. |

***Tab. 4-4:*** *Monitoring of output current and output voltage*

**NOTE** Other monitored items, such as output voltage and set frequency, are also available. Use Pr. 52 to change the setting. (Refer to page 5-317.)

## 4.2.2 First monitored item

The first monitored item to be displayed in the monitor mode is selectable. To set a monitored item as the first monitored item, display a monitored item, and press the SET key for a while.

**Example ▽** Changing example:
Set the output current as the first monitored item.

| Operation |
|---|
| ① Select the monitor mode, and select the output current. |
| ② Press SET for a while (1 s).<br>The output current is set as the first monitored item. |
| ③ When the monitor mode is selected next time, the output current is monitored first. |

***Tab. 4-5:*** *Setting the output current as the first monitored item*

△

**NOTE** Use Pr. 774 "Operation panel monitor selection 1" to change the monitored item.
(Refer to page 5-317.)

### 4.2.3 Displaying the set frequency

In the PU operation mode or in the External/PU combined operation mode 1 (Pr. 79 "Operation mode selection" = "3"), select the monitor mode, and then press the setting dial. The present set frequency is displayed.

**NOTE**

Use Pr. 992 "Operation panel setting dial push monitor selection" to change the displayed indication. (Refer to page 5-317.)

# 4.3 Easy operation mode setting (easy setting mode)

A required combination of a start command and a frequency command can be easily selected using Pr. 79 "Operation mode selection".

**Example ▽** Changing example:
Operate with the external (STF/STR) start command and setting dial frequency command.

| Operation | |
|---|---|
| ① Press PU/EXT and MODE for 0.5 s. | Flickering 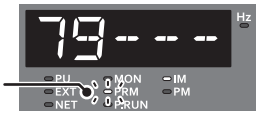 |
| ② Turn until 79--3 (External/PU combined operation mode 1) appears.<br>(For other settings, refer to the table below.) | Flickering 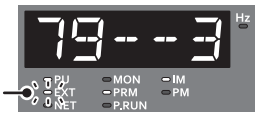 |
| ③ Press SET to enter the setting. External/PU combined operation mode 1 (Pr. 79 = "3") is set. | |

***Tab. 4-6:*** *One can immediately change parameter 79 by simultaneously pressing the PU/EXT and MODE keys*

△

| Operation panel indication | Operation method | | Operation mode |
|---|---|---|---|
| | Start command | Frequency command | |
| Flickering 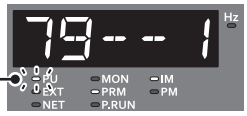 | FWD, REV | ① | PU operation mode |
| Flickering 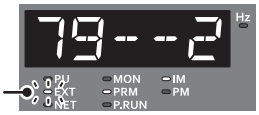 | External (STF, STR) | Analog voltage input | External operation mode |
| Flickering 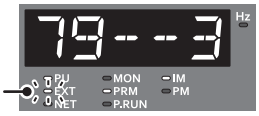 | External (STF, STR) | ① | External/PU combined operation mode 1 |
| Flickering 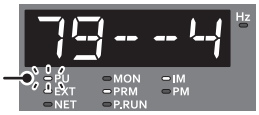 | FWD, REV | Analog voltage input | External/PU combined operation mode 2 |

***Tab. 4-7:*** *Operation modes and operation panel indication*

① To use the setting dial as a potentiometer, refer to page 5-190.

**NOTES**

Er 1 is displayed... Why?
Pr. 79 may not be included in the user group set by Pr. 160 "User group read selection" = "1".

Er 2 is displayed... Why?
Setting cannot be changed during operation. Turn the start command (FWD or REV key, STF or STR) OFF.

If the MODE key is pressed before pressing the SET key, the easy setting mode is terminated and the display goes back to the monitor display. If the easy setting mode is terminated while Pr. 79 = "0 (initial value)", the operation mode switches between the PU operation mode and the External operation mode. Check the operation mode.

Reset by STOP/RESET key is enabled.

The priorities of the frequency commands when Pr. 79 = "3" are "Multi-speed operation (RL/RM/RH/REX) > PID control (X14) > terminal 4 analog input (AU) > digital input from the operation panel".

# 4.4 Frequently-used parameters (simple mode parameters)

Parameters that are frequently used for the FR-A800 series are grouped as simple mode parameters.

When Pr. 160 "User group read selection" = "9999", only the simple mode parameters are displayed.

This section explains about frequently-used parameters.

## 4.4.1 Simple mode parameter list

For simple variable-speed operation of the inverter, the initial values of the parameters may be used as they are. Set the necessary parameters to meet the load and operational specifications. Parameter setting, change and check can be performed from the operation panel (FR-DU08).

**NOTE**

Pr. 160 "User group read selection" can narrow down the displayed parameters to only the simple mode parameters. (In the initial setting, all parameters are displayed.) Set Pr. 160 "User group read selection" as required. (For the parameter change, refer to page 4-6.)

| Pr. 160 setting | Description |
|---|---|
| 9999 | Displays only the simple mode parameters. |
| 0 (initial value) | Displays simple mode + extended parameters. |
| 1 | Displays parameters registered in the user group. |

***Tab. 4-8:*** *Setting of parameter 160*

| Pr. | Pr. group | Name | Unit | Initial value ⑪ FM | Initial value ⑪ CA | Range | Application | Refer to page |
|---|---|---|---|---|---|---|---|---|
| 0 | G000 | Torque boost | 0.1% | 6% ① | | 0–30% | Set this parameter to obtain a higher starting torque under V/F control. Also set this when a loaded motor cannot be driven and the warning [OL] occurs, then the inverter trips with [OC1]. | 5-629 |
| | | | | 4% ② | | | | |
| | | | | 3% ③ | | | | |
| | | | | 2% ④ | | | | |
| | | | | 1% ⑤ | | | | |
| 1 | H400 | Maximum frequency | 0.01 Hz | 120 Hz ⑥ | | 0–120 Hz | Sets the upper limit for the output frequency. | 5-300 |
| | | | | 60 Hz ⑦ | | | | |
| 2 | H401 | Minimum frequency | 0.01 Hz | 0Hz | | 0–120 Hz | Sets the lower limit for the output frequency. | |
| 3 | G001 | Base frequency | 0.01 Hz | 60 Hz | 50 Hz | 0–590 Hz | Set this parameter when the rated motor frequency is 50 Hz. Check the rating plate of the motor. | 5-631 |
| 4 | D301 | Multi-speed setting (high speed) | 0.01 Hz | 60 Hz | 50 Hz | 0–590 Hz | Pre-sets the speeds that will be switched among by terminals. | 4-16, 4-24, 5-182 |
| 5 | D302 | Multi-speed setting (middle speed) | 0.01 Hz | 30 Hz | | 0–590 Hz | | |
| 6 | D303 | Multi-speed setting (low speed) | 0.01 Hz | 10 Hz | | 0–590 Hz | | |
| 7 | F010 | Acceleration time | 0.1 s | 5 s ⑨ | | 0–3600 s | Sets the acceleration time. ① | 5-225 |
| | | | | 15 s ⑩ | | | | |
| 8 | F011 | Deceleration time | 0.1 s | 5 s ⑨ | | 0–3600 s | Sets the deceleration time. | |
| | | | | 15 s ⑩ | | | | |

***Tab. 4-9:*** *Simple mode parameters (1)*

| Pr. | Pr. group | Name | Unit | Initial value ⑪ | | Range | Application | Refer to page |
|---|---|---|---|---|---|---|---|---|
| | | | | FM | CA | | | |
| 9 | H000 C103 | Electronic thermal O/L relay | 0.01 A ⑥ | Rated inverter current ⑧ | | 0–500 A ⑥ | Protects the motor from heat. Set the rated motor current. | 5-284 |
| | | | 0.1 A ⑦ | | | 0–3600 A ⑦ | | |
| 79 | D000 | Operation mode selection | 1 | 0 | | 0–4, 6, 7 | Select the start and frequency command sources. | 5-255 |
| 125 | T022 | Terminal 2 frequency setting gain frequency | 0.01 Hz | 60 Hz | 50 Hz | 0–590 Hz | Allows the frequency at the maximum potentiometer setting (5 V in the initial setting) to be changed. | 4-27, 5-388 |
| 126 | T042 | Terminal 4 frequency setting gain frequency | 0.01 Hz | 60 Hz | 50 Hz | 0–590 Hz | Allows the frequency at the maximum current input (20 mA in the initial setting) to be changed. | 4-29, 5-388 |
| 160 | E440 | User group read selection | 1 | 0 | | 0, 1, 9999 | Restricts the parameters that are read by the operation panel and parameter unit. | 5-208 |
| 998 | E430 | PM parameter initialization | 1 | 0 | | 0, 3003, 3103, 8009, 8109, 9009, 9109 | Selects the PM sensorless vector control and set the parameters that are required to drive an PM motor. | 5-69 |
| 999 | E431 | Automatic parameter setting | 1 | 9999 | | 1, 2, 10, 11, 12, 13, 20, 21, 30, 31, 9999 | Changes parameter settings as a batch. The target parameters include communication parameters for the Mitsubishi's human machine interface (GOT) connection and the parameters for the rated frequency settings of 50 Hz/ 60 Hz. | 5-203 |

***Tab. 4-9:*** *Simple mode parameters (2)*

① Initial value for the FR-A820-00077(0.75K) or lower and FR-A840-00038(0.75K) or lower.

② Initial value for the FR-A820-00105(1.5K) to FR-A820-00250(3.7K) and the FR-A840-00052(1.5K) to FR-A840-00126(3.7K).

③ Initial value for the FR-A820-00340(5.5K), FR-A820-00490(7.5K), FR-A820-00340(5.5K), and FR-A840-00250(7.5K).

④ Initial value for the FR-A820-00630(11K) to FR-A820-03160(55K), FR-A820-00630(11K) to FR-A840-01800(55K).

⑤ Initial value for the FR-A820-03800(75K) or higher and FR-A840-02160(75K) or higher.

⑥ For the FR-A820-03160(55K) or lower and FR-A840-01800(55K) or lower.

⑦ For the FR-A820-03800(75K) or higher and FR-A840-02160(75K) or higher.

⑧ The initial value for the FR-A820-00077(0.75K) or lower and FR-A840-00038(0.75K) or lower is set to the 85% of the rated inverter current.

⑨ Initial value for the FR-A820-00490(7.5K) or lower and FR-A840-00250(7.5K) or lower.

⑩ Initial value for the FR-A820-00630(11K) or higher and FR-A840-00310(11K) or higher.

⑪ FM denotes the initial value for the FM type inverter that has the terminal FM, and CA denotes the initial value for the CA type inverter that has the terminal CA.

# 4.5 Basic operation procedure (PU operation)

**NOTE**

Where is the frequency command source?
- The frequency set in the frequency setting mode of the operation panel => Refer to section 4.5.1 (page 4-13.)
- The setting dial used as the potentiometer => Refer to section 4.5.2 (page 4-15).
- The ON/OFF switches connected to terminals => Refer to section 4.5.3 (page 4-16).
- Voltage input signals => Refer to section 4.5.4 (page 4-18).
- Current input signals => Refer to section 4.5.5 (page 4-20).

## 4.5.1 Operating at the set frequency (example: operating at 30 Hz)

**NOTE**

Use the operation panel (FR-DU08) to give a start command and a frequency command (PU operation).

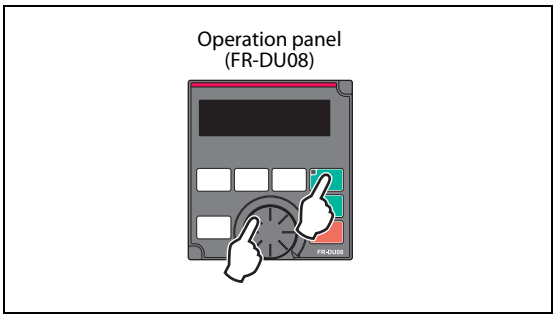


***Fig. 4-4:***
*PU operation mode*

I002443E

**Example ▽** Operation example: Operate at 30 Hz.

| Operation |
|---|
| ① Screen at power-ON<br>The monitor display appears. |
| ② Changing the operation mode<br>Press [PU/EXT] to choose the PU operation mode. [PU] indicator is lit. |
| ③ Setting the frequency<br>Turn ⊛ until the target frequency, " 30.00 " (30.00 Hz), appears. The frequency flickers for about 5 s.<br>While the value is flickering, press [SET] to enter the frequency. " F " and " 30.00 " flicker alternately.<br>After about 3 s of flickering, the indication goes back to " 0.00 " (monitor display).<br>(If [SET] is not pressed, the indication of the value goes back to " 0.00 " (0.00 Hz) after about 5 s of flickering.<br>In that case, turn ⊛ again and set the frequency.) |
| ④ Start ➔ acceleration ➔constant speed<br>Press [FWD] or [REV] to start running. The frequency value on the indication increases in Pr. 7 "Acceleration time", and " 30.00 " (30.00 Hz) appears.<br>(To change the set frequency, perform the operation in above step 3. The previously set frequency appears.) |
| ⑤ Deceleration ➔ stop<br>Press [STOP/RESET] to stop. The frequency value on the indication decreases in Pr. 8 "Deceleration time", and the motor stops rotating with " 0.00 " (0.00 Hz) displayed. |

***Tab. 4-10:*** *Frequency setting with the setting dial*

△

**NOTES**

To display the set frequency under PU operation mode or External/PU combined operation mode 1 (Pr. 79 = "3"), press the setting dial. (Refer to page 5-317.)

The setting dial can also be used like a potentiometer to perform operation. (Refer to page 4-15.)

| Parameters referred to | | | |
|---|---|---|---|
| Pr. 7 | Acceleration time | => | page 5-225 |
| Pr. 8 | Deceleration time | => | page 5-225 |
| Pr. 79 | Operation mode selection | => | page 5-255 |

## 4.5.2 Using the setting dial like a potentiometer to perform operation

**NOTE**

Set Pr. 161 "Frequency setting/key lock operation selection" = "1" (setting dial potentiometer).

**Example** ▽

Operation example: Change the frequency from 0 Hz to 60 Hz during operation

| Operation |
|---|
| ① Screen at power-ON<br>The monitor display appears. |
| ② Changing the operation mode<br>Press [PU/EXT] to choose the PU operation mode. [PU] indicator is lit. |
| ③ Changing the parameter setting<br>Change Pr. 161 setting to "1". (For setting value change, refer to page 4-6.) |
| ④ Start<br>Press [FWD] or [REV] to start the inverter operation. |
| ⑤ Setting the frequency<br>Turn "⊛" until "60.00" appears. The set frequency flickers. (The frequency flickers for about 5 s.)<br>[SET] needs not to be pressed. |

***Tab. 4-11:*** *Use the digital dial like a potentiometer to perform operation*

△

**NOTES**

If the display changes from flickering "60.00" to "0.00", Pr. 161 "Frequency setting/key lock operation selection" may be set to a value other than "1".

Simply turning the setting dial will enable frequency setting whether the inverter is running or at a stop.

The newly-set frequency will be saved as the set frequency in EEPROM after 10 s.

With the setting dial, the frequency can go up to the setting value of Pr. 1 "Maximum frequency". Check the Pr. 1 "Maximum frequency" setting, and adjust the setting according to the application.

| Parameters referred to | | | |
|---|---|---|---|
| Pr. 1 | Maximum frequency | => | page 5-300 |
| Pr. 161 | Frequency setting/key lock operation selection | => | page 5-190 |

## 4.5.3 Setting the frequency by switches (multi-speed setting)

**NOTES**

- Use the operation panel (FR-DU08) (FWD or REV key) to give a start command.
- Turn ON the RH, RM, or RL signal to give a frequency command (multi-speed setting).
- Set Pr. 79 "Operation mode selection" = "4" (External/PU combination operation mode 2).

**Connection diagram**

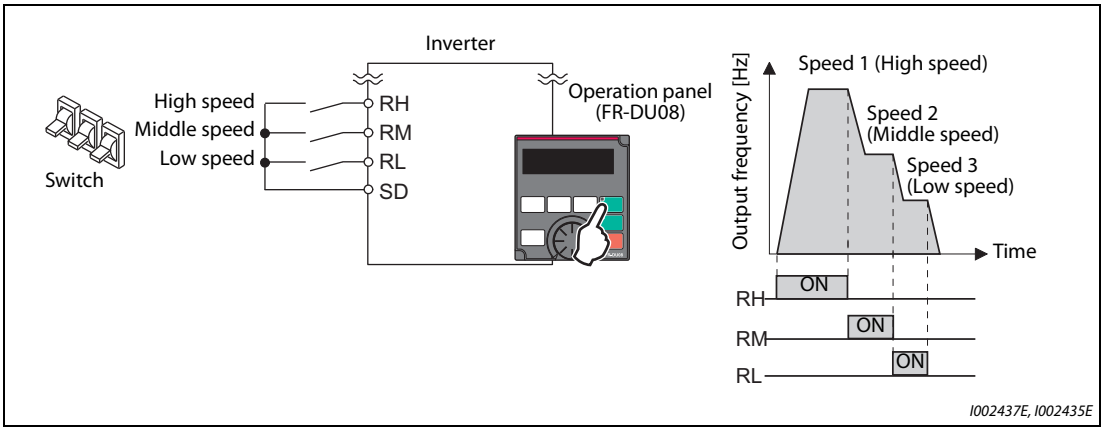


***Fig. 4-5:*** *Multi-speed selection by external terminals*

**Example ▽** Operation example: Operate at a low-speed (10 Hz).

| Operation |
|---|
| ① Screen at power-ON<br>The monitor display appears. |
| ② Changing the operation mode<br>Set "4" in Pr. 79. [PU] and [EXT] indicators are lit. (For setting value change, refer to page 4-9.) |
| ③ Setting the frequency<br>Turn ON the low-speed switch (RL). |
| ④ Start ➔ acceleration ➔ constant speed<br>Press FWD or REV to start running. The frequency value on the indication increases in Pr. 7 "Acceleration time", and " 10.00 " (10.00 Hz) appears. |
| ⑤ Deceleration ➔ stop<br>Press STOP RESET to stop. The frequency value on the indication decreases in Pr. 8 "Deceleration time", and the motor stops rotating with " 0.00 " (0.00 Hz) displayed. Turn OFF the low-speed switch (RL). |

***Tab. 4-12:*** *Operate the inverter by using multi-speed setting*

△

**NOTES**

The terminal RH is initially set to 60 Hz for the FM type inverter, and to 50 Hz for the CA type inverter. The terminal RM is set to 30 Hz, and the RL is set to 10 Hz. (To change, set Pr. 4, Pr. 5, and Pr. 6.)

In the initial setting, when two or more of multi-speed settings are simultaneously selected, priority is given to the set frequency of the lower signal.
For example, when RH and RM signals turn ON, RM signal (Pr. 5) has a higher priority.

Maximum of 15-speed operation can be performed.

| Parameters referred to | | | |
|---|---|---|---|
| Pr. 4 to Pr. 6 | (multi-speed setting) | => | page 5-280 |
| Pr. 7 | Acceleration time | => | page 5-225 |
| Pr. 8 | Deceleration time | => | page 5-225 |
| Pr. 79 | Operation mode selection | => | page 5-255 |

## 4.5.4 Setting the frequency with analog signals (voltage input)

**NOTES**

Use the operation panel (FR-DU08) (FWD or REV key) to give a start command.

Use the potentiometer (frequency setting potentiometer) to give a frequency command (by connecting it across terminals 2 and 5 (voltage input)).

Set Pr. 79 "Operation mode selection" = "4" (External/PU combination operation mode 2).

### Connection diagram

(The inverter supplies 5 V power to the frequency setting potentiometer (terminal 10).)

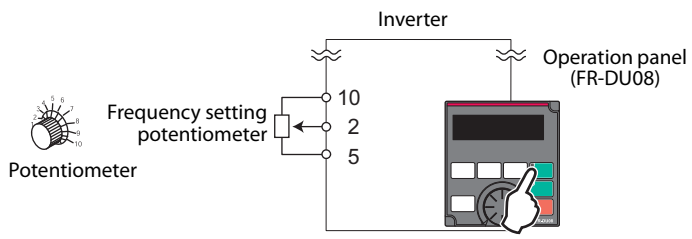


***Fig. 4-6:*** *Frequency setting by analog voltage input*

**Example ▽** Operation example: Operate at 60 Hz.

| Operation |
|---|
| ① Screen at power-ON<br>The monitor display appears. |
| ② Changing the operation mode<br>Set "4" in Pr. 79. [PU] and [EXT] indicators are lit. (For setting value change, refer to page 4-6.) |
| ③ Start<br>Press FWD or REV. [FWD] or [REV] flickers as no frequency command is given. |
| ④ Acceleration ➔ constant speed<br>Turn the potentiometer (frequency setting potentiometer) clockwise slowly to full. The frequency value on the indication increases in Pr. 7 "Acceleration time", and "60.00" (60.00 Hz) appears. |
| ⑤ Deceleration<br>Turn the potentiometer (frequency setting potentiometer) counterclockwise slowly to full. The frequency value on the indication decreases in Pr. 8 "Deceleration time", and the motor stops rotating with "0.00" (0.00 Hz) displayed. [FWD] or [REV] indicator flickers. |
| ⑥ Stop<br>Press STOP RESET. [FWD] or [REV] indicator turns OFF. |

***Tab. 4-13:*** *Operate the inverter by using the analog voltage input*

△

**NOTES**

To change the frequency (60 Hz) at the maximum voltage input (initial value 5 V), adjust Pr. 125 "Terminal 2 frequency setting gain frequency".

To change the frequency (0 Hz) at the minimum voltage input (initial value 0 V), adjust the calibration parameter C2 "Terminal 2 frequency setting bias frequency".

| **Parameters referred to** | | | |
|---|---|---|---|
| Pr. 7 | Acceleration time | => | page 5-225 |
| Pr. 8 | Deceleration time | => | page 5-225 |
| Pr. 79 | Operation mode selection | => | page 5-255 |
| Pr. 125 | Terminal 2 frequency setting gain frequency | => | page 5-388 |
| C2 (Pr. 902) | Terminal 2 frequency setting bias frequency | => | page 5-388 |

## 4.5.5 Using an analog signal (current input) to give a frequency command

**NOTES**

- Use the operation panel (FR-DU08) (FWD or REV key) to give a start command.
- Use the outputs from the current signal source (4 to 20 mA) to give a frequency command (by connecting it across terminals 4 and 5 (current input)).
- Turn ON the AU signal.
- Set Pr. 79 "Operation mode selection" ="4" (External/PU combination operation mode 2).

### Connection diagram

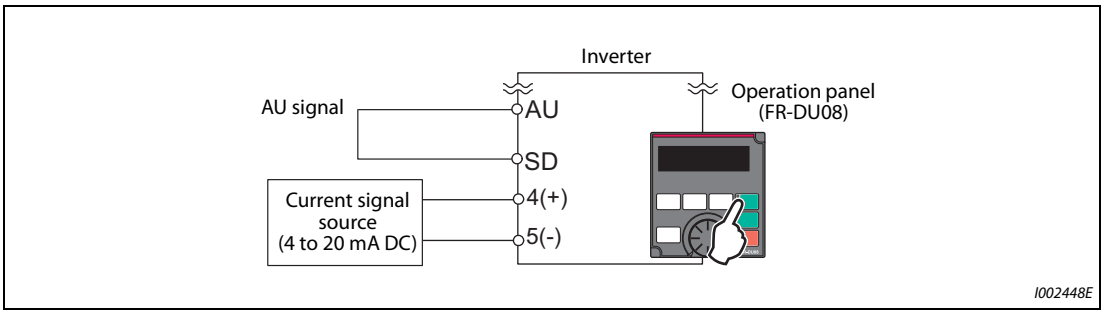


***Fig. 4-7:*** *Frequency setting by analog current input*

**Example ▽** Operation example: Operate at 60 Hz.

| Operation |
|---|
| ① Screen at power-ON<br>The monitor display appears. |
| ② Changing the operation mode<br>Set "4" in Pr. 79. [PU] and [EXT] indicators are lit. (For setting value change, refer to page 4-6.) |
| ③ Terminal 4 input selection<br>Turn ON the terminal 4 input selection signal (AU). Input to the terminal 4 is enabled. |
| ④ Start<br>Press FWD or REV. [FWD] or [REV] flickers as no frequency command is given. |
| ⑤ Acceleration → constant speed<br>Input 20 mA. The frequency value on the indication increases in Pr. 7 "Acceleration time", and "60.00" (60.00 Hz) appears. |
| ⑥ Deceleration<br>Input 4 mA or less.The frequency value on the indication decreases in Pr. 8 "Deceleration time", and the motor stops rotating with "0.00" (0.00 Hz) displayed. [FWD] or [REV] indicator flickers. |
| ⑦ Stop<br>Press STOP RESET. [FWD] or [REV] indicator turns OFF. |

***Tab. 4-14:*** *Operate the inverter by using the analog current input*

△

**NOTES**

Pr. 184 "AU terminal function selection" must be set to "4" (AU signal) (initial value).

To change the frequency (60 Hz) at the maximum current input (initial value 20 mA), adjust Pr. 126 "Terminal 4 frequency setting gain frequency".

To change the frequency (0 Hz) at the minimum current input (initial value 4 mA), adjust the calibration parameter C5 "Terminal 4 frequency setting bias frequency".

| Parameters referred to | | | |
|---|---|---|---|
| Pr. 7 | Acceleration time | => | page 5-225 |
| Pr. 8 | Deceleration time | => | page 5-225 |
| Pr. 79 | Operation mode selection | => | page 5-255 |
| Pr. 126 | Terminal 4 frequency setting gain frequency | => | page 5-388 |
| Pr. 184 | AU terminal function selection | => | page 5-409 |
| C5 (Pr. 904) | Terminal 4 frequency setting bias frequency | => | page 5-388 |

# 4.6 Basic operation procedure (External operation)

**NOTE**

Where is the frequency command source?
- The frequency set in the frequency setting mode of the operation panel => Refer to section 4.6.1 (page 4-22).
- Switches (multi-speed setting) => Refer to section 4.6.3 (page 4-26).
- Voltage input signals => Refer to section 4.6.4 (page 4-27).
- Current input signals => Refer to section 4.6.5 (page 4-28).

## 4.6.1 Using the frequency set by the operation panel

**NOTES**

Switch ON the STF (STR) signal to give a start command.

Use the operation panel (FR-DU08) (setting dial) to give a start command.

Set Pr. 79 = "3" (External/PU combined operation mode 1).

**Connection diagram**

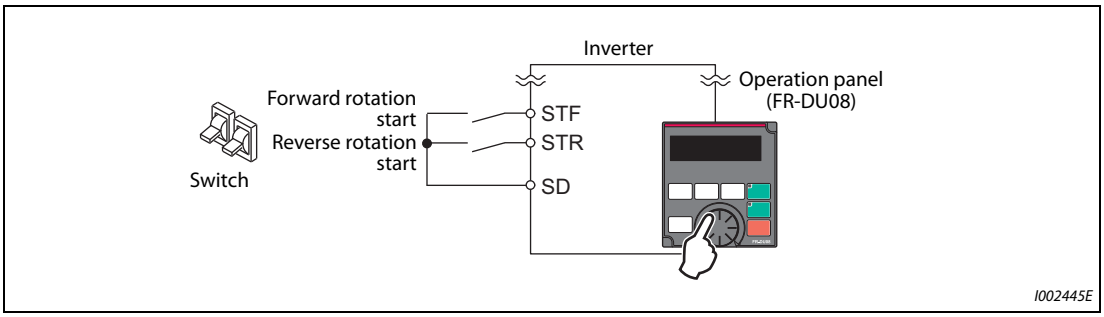


***Fig. 4-8:*** *External operation*

**Example ▽** Operation example: Operate at 30 Hz.

| Operation |
|---|
| ① Changing the operation mode<br>Set "3" in Pr. 79. [PU] and [EXT] indicators are lit. (For setting value change, refer to page 4-6.) |
| ② Setting the frequency<br>Turn to until the target frequency, " 30.00 " (30.00 Hz), appears. The frequency flickers for about 5 s.<br>While the value is flickering, press SET to enter the frequency. " F " and " 30.00 " flicker alternately.<br>After about 3 s of flickering, the indication goes back to " 0.00 " (monitor display).<br>(If SET is not pressed, the indication of the value goes back to " 0.00 " (0.00 Hz) after about 5 s of flickering.<br>In that case, turn again and set the frequency.) |
| ③ Start ➔ acceleration ➔ constant speed<br>Turn ON the start switch (STF or STR). The frequency value on the indication increases in Pr. 7 "Acceleration time", and " 30.00 " (30.00 Hz) appears. [FWD] indicator is lit during the forward rotation, and [REV] indicator is lit during the reverse rotation.<br>(To change the set frequency, perform the operation in above step ②. The previously set frequency appears.) |
| ④ Deceleration ➔ stop<br>Turn OFF the start switch (STF or STR). The frequency value on the indication decreases in Pr. 8 "Deceleration time", and the motor stops rotating with " 0.00 " (0.00 Hz) displayed. |

***Tab. 4-15:*** *Operate the inverter by using external signals*

△

**NOTES**

When both the forward rotation switch (STF) and the reverse rotation switch (STR) are ON, the motor cannot be started. If both are turned ON while the inverter is running, the inverter decelerates to a stop.

Pr. 178 "STF terminal function selection" must be set to "60" (or Pr. 179 "STR terminal function selection" must be set to "61"). (All are initial values.)

Setting Pr. 79 "Operation mode selection" = "3" also enables multi-speed operation.

If stopped using STOP/RESET key on the operation panel (FR-DU08) during the External operation, the inverter enters the PU stop status.
("PS" appears on the operation panel.)
To reset the PU stop status, turn OFF the start switch (STF or STR), and then press PU/EXT key. (Refer to page 5-186.)

| Parameters referred to | | | |
|---|---|---|---|
| Pr. 4 to Pr. 6 | (multi-speed setting) | => | page 5-280 |
| Pr. 7 | Acceleration time | => | page 5-225 |
| Pr. 8 | Deceleration time | => | page 5-225 |
| Pr. 178 | STF terminal function selection | => | page 5-409 |
| Pr. 179 | STR terminal function selection | => | page 5-409 |
| Pr. 79 | Operation mode selection | => | page 5-255 |

## 4.6.2 Setting the frequency by switches (multi-speed setting) (Pr. 4 to Pr. 6)

**NOTES**

Switch ON the STF (STR) signal to give a start command.

Turn ON the RH, RM, or RL signal to give a frequency command. (Multi-speed setting)

**Connection diagram**

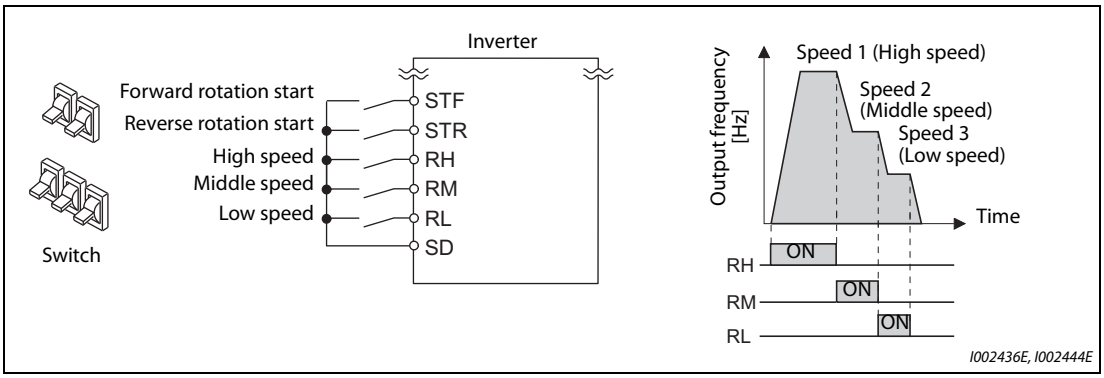


***Fig. 4-9:*** *Multi-speed setting in dependence on the terminals*

**Example ▽** Changing example: Operate at a high-speed (60 Hz).

| Operation |
|---|
| ① Screen at power-ON<br>The monitor display appears. |
| ② Setting the frequency<br>Turn ON the high-speed switch (RH). |
| ③ Start ➔ acceleration ➔ constant speed<br>Turn ON the start switch (STF or STR). The frequency value on the indication increases in Pr. 7 "Acceleration time", and "60.00" (60.00 Hz) appears. [FWD] indicator is lit during the forward rotation, and [REV] indicator is lit during the reverse rotation.<br>When RM is turned ON, 30 Hz is displayed. When RL is turned ON, 10 Hz is displayed. |
| ④ Deceleration ➔ stop<br>Turn OFF the start switch (STF or STR).The frequency value on the indication decreases in Pr. 8 "Deceleration time", and the motor stops rotating with "0.00" (0.00 Hz) displayed. [FWD] or [REV] indicator turns OFF. Turn OFF the high-speed switch (RH). |

***Tab. 4-16:*** *Operate the inverter by using external signals*

△

**NOTES**

When both the forward rotation switch (STF) and the reverse rotation switch (STR) are ON, the motor cannot be started. If both are turned ON while the inverter is running, the inverter decelerates to a stop.

The terminal RH is initially set to 60 Hz for the FM type inverter, and to 50 Hz for the CA type inverter. The terminal RM is set to 30 Hz, and the RL is set to 10 Hz. (To change, set Pr. 4, Pr. 5, and Pr. 6.)

In the initial setting, when two or more of multi-speed settings are simultaneously selected, priority is given to the set frequency of the lower signal.
For example, when RH and RM signals turn ON, RM signal (Pr. 5) has a higher priority.

Maximum of 15-speed operation can be performed.

| Parameters referred to | | | |
|---|---|---|---|
| Pr. 4 to Pr. 6 | (multi-speed setting) | => | page 5-280 |
| Pr. 7 | Acceleration time | => | page 5-225 |
| Pr. 8 | Deceleration time | => | page 5-225 |

## 4.6.3 Setting the frequency with analog signals (voltage input)

**NOTES**

Switch ON the STF (STR) signal to give a start command.

Use the potentiometer (frequency setting potentiometer) to give a frequency command (by connecting it across terminals 2 and 5 (voltage input)).

**Connection diagram**

(The inverter supplies 5 V power to the frequency setting potentiometer (terminal 10).)

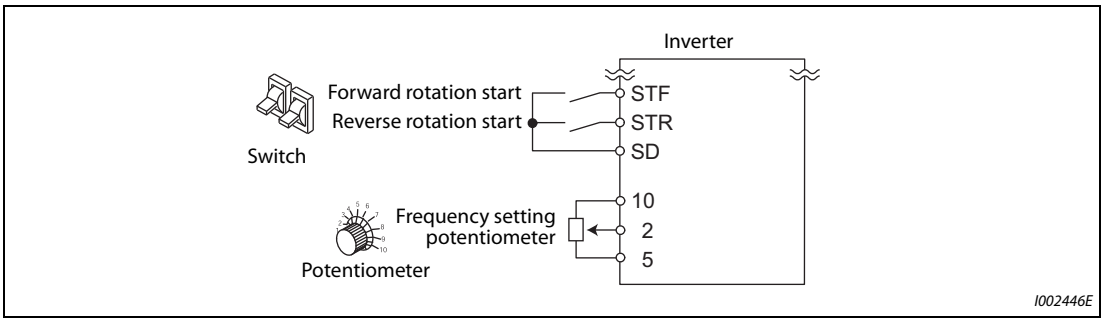


***Fig. 4-10:*** *Frequency setting by analog voltage input*

**Example ▽** Operation example: Operate at 60 Hz.

| Operation |
|---|
| ① Screen at power-ON<br>The monitor display appears. |
| ② Start<br>Turn ON the start switch (STF or STR). [FWD] or [REV] flickers as no frequency command is given. |
| ③ Acceleration ➔ constant speed<br>Turn the potentiometer (frequency setting potentiometer) clockwise slowly to full. The frequency value on the indication increases in Pr. 7 "Acceleration time", and "60.00" (60.00 Hz) appears. [FWD] indicator is lit during the forward rotation, and [REV] indicator is lit during the reverse rotation. |
| ④ Deceleration<br>Turn the potentiometer (frequency setting potentiometer) counterclockwise slowly to full. The frequency value on the indication decreases in Pr. 8 "Deceleration time", and the motor stops rotating with "0.00" (0.00 Hz) displayed. |
| ⑤ Stop<br>Turn OFF the start switch (STF or STR). [FWD] or [REV] indicator turns OFF. |

***Tab. 4-17:*** *Operate the inverter by using the analog voltage input*

△

**NOTES**

When both the forward rotation switch (STF) and the reverse rotation switch (STR) are ON, the motor cannot be started. If both are turned ON while the inverter is running, the inverter decelerates to a stop.

Pr. 178 "STF terminal function selection" must be set to "60" (or Pr. 179 "STR terminal function selection" must be set to "61"). (All are initial values.)

| Parameters referred to | | | |
|---|---|---|---|
| Pr. 7 | Acceleration time | => | page 5-225 |
| Pr. 8 | Deceleration time | => | page 5-225 |
| Pr. 178 | STF terminal function selection | => | page 5-409 |
| Pr. 179 | STR terminal function selection | => | page 5-409 |

## 4.6.4 Changing the frequency (60 Hz, initial value) at the maximum voltage input (5 V, initial value)

### Change the maximum frequency

**Example ▽**

Changing example
With a 0 to 5 V DC input frequency setting potentiometer, change the frequency at 5 V from 60 Hz (initial value) to 50 Hz.
Adjust the setting so that the inverter outputs 50 Hz when 5 V is input. Set "50 Hz" in Pr. 125.

| Operation |
|---|
| ① Parameter selection<br>Turn until P. 125 (Pr. 125) appears.<br>Press SET to show the present set value. (60.00 Hz) |
| ② Changing the maximum frequency<br>Turn to change the set value to "50.00". (50.00 Hz)<br>Press SET to enter the setting."50.00" and "P. 125" flicker alternately. |
| ③ Checking the mode/monitor<br>Press MODE three times to change to the monitor / frequency monitor. |
| ④ Start<br>Turn ON the start switch (STF or STR), then turn the potentiometer (frequency setting potentiometer) clockwise slowly to full. (Refer to steps ② and ③ in section 4.6.3.) Operate at 50 Hz. |

***Tab. 4-18:*** *Change the frequency of the maximum analog value*

**NOTES**

To set the frequency at 0 V, use the calibration parameter C2.

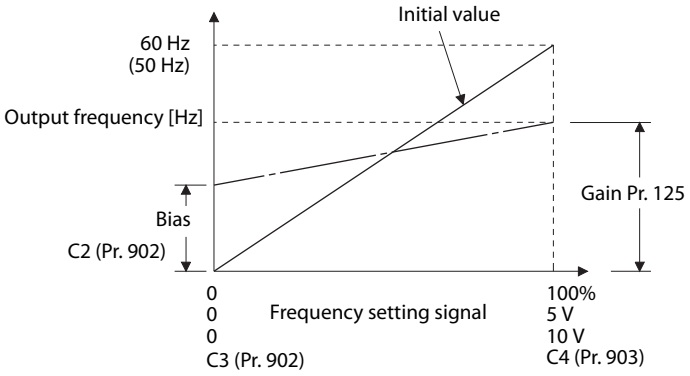


Other adjustment methods for the frequency setting voltage gain are the following: adjustment by applying a voltage directly across terminals 2 and 5, and adjustment using a specified point without applying a voltage across terminals 2 and 5.

| Parameters referred to | | | |
|---|---|---|---|
| Pr. 125 | Terminal 2 frequency setting gain frequency | => | page 5-388 |
| C2 (Pr. 902) | Terminal 2 frequency setting bias frequency | => | page 5-388 |
| C4 (Pr. 903) | Terminal 2 frequency setting gain | => | page 5-388 |

## 4.6.5 Using an analog signal (current input) to give a frequency command

**NOTES**

Switch ON the STF (STR) signal to give a start command.

Turn ON the AU signal.

Set Pr. 79 "Operation mode selection" = "2" (External operation mode).

**Connection diagram**

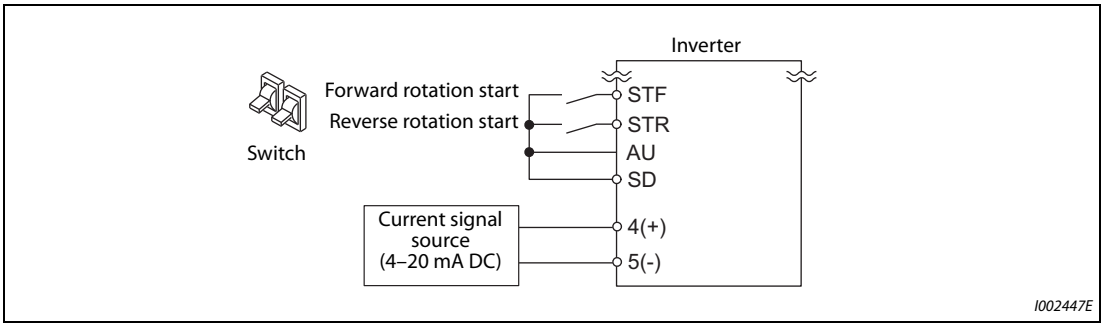


***Fig. 4-11:*** *Frequency setting by analog current input*

**Example ▽** Operation example: Operate at 60 Hz.

| Operation |
|---|
| ① Screen at power-ON<br>The monitor display appears. |
| ② Terminal 4 input selection<br>Turn ON the terminal 4 input selection signal (AU). Input to the terminal 4 is enabled. |
| ③ Start<br>Turn ON the start switch (STF or STR). [FWD] or [REV] flickers as no frequency command is given. |
| ④ Acceleration ➔ constant speed<br>Input 20 mA.The frequency value on the indication increases in Pr. 7 "Acceleration time", and "60.00" (60.00 Hz) appears. [FWD] indicator is lit during the forward rotation, and [REV] indicator is lit during the reverse rotation. |
| ⑤ Deceleration<br>Input 4 mA or less.The frequency value on the indication decreases in Pr. 8 "Deceleration time", and the motor stops rotating with "0.00" (0.00 Hz) displayed. [FWD] or [REV] indicator flickers. |
| ⑥ Stop<br>Turn OFF the start switch (STF or STR). [FWD] or [REV] indicator turns OFF. |

***Tab. 4-19:*** *Operate the inverter by using the analog current input*

△

**NOTES**

When both the forward rotation switch (STF) and the reverse rotation switch (STR) are ON, the motor cannot be started. If both are turned ON while the inverter is running, the inverter decelerates to a stop.

Pr. 184 "AU terminal function selection" must be set to "4" (AU signal) (initial value).

| Parameters referred to | | | |
|---|---|---|---|
| Pr. 7, Pr. 8 | Acceleration time, Deceleration time | => | page 5-225 |
| Pr. 184 | AU terminal function selection | => | page 5-409 |

## 4.6.6 Changing the frequency (60 Hz, initial value) at the maximum current input (at 20 mA, initial value)

### Change the maximum frequency

**Example ▽**

Changing example:
With a 4 to 20 mA input frequency setting potentiometer, change the frequency at 20 mA from 60 Hz (initial value) to 50 Hz.
Adjust the setting so that the inverter outputs 50 Hz when 20 mA is input. Set "50 Hz" in Pr. 126.

| Operation |
|---|
| ① Parameter selection<br>Turn ⊛ until P. 126 (Pr. 126) appears.<br>Press SET to show the present set value. (60.00 Hz) |
| ② Changing the maximum frequency<br>Turn ⊛ to change the set value to "50.00". (50.00 Hz)<br>Press SET to enter the setting." 50.00 " and " P. 126 " flicker alternately. |
| ③ Checking the mode/monitor<br>Press MODE three times to change to the monitor / frequency monitor. |
| ④ Start<br>Turn ON the start switch (STF or STR), then turn the potentiometer (frequency setting potentiometer) clockwise slowly to full. (Refer to steps ③ and ④ in section 4.6.5.) Operate at 50 Hz. |

***Tab. 4-20:*** *Change the frequency of the maximum analog value*

△

**NOTES**

To set the frequency at 4 mA, use the calibration parameter C5.

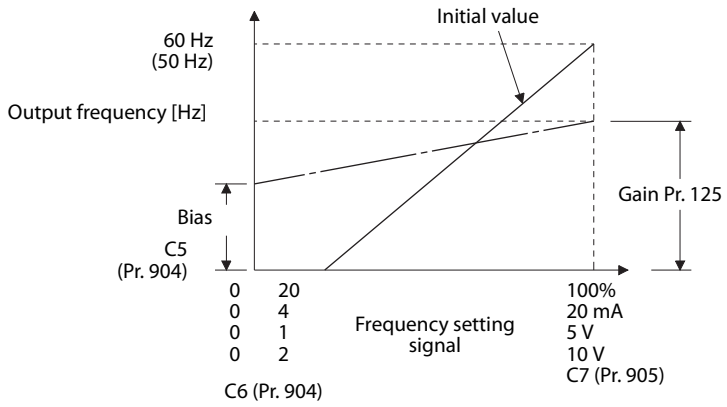


Other adjustment methods for the frequency setting current gain are the following: adjustment by applying a current through terminals 4 and 5, and adjustment using a specified point without applying a current through terminals 4 and 5.

| Parameters referred to | | | |
|---|---|---|---|
| Pr. 126 | Terminal 4 frequency setting gain frequency | => | page 5-388 |
| C5 (Pr. 904) | Terminal 4 frequency setting bias frequency | => | page 5-388 |
| C7 (Pr. 905) | Terminal 4 frequency setting gain | => | page 5-388 |

# 4.7 Basic operation procedure (JOG operation)

## 4.7.1 Performing JOG operation using external signals

**NOTES**

Perform JOG operation only while the JOG signal is ON.

Use Pr. 15 "Jog frequency" and Pr. 16 "Jog acceleration/deceleration time" for the operation.

Set Pr. 79 "Operation mode selection" ="2" (External operation mode).

**Connection diagram**

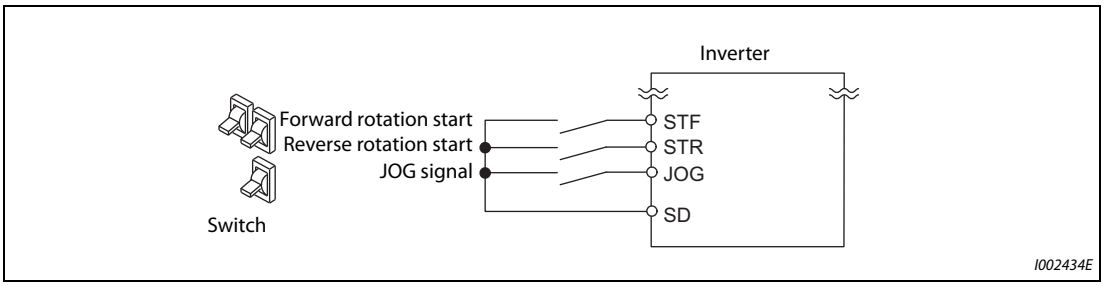


***Fig. 4-12:*** *JOG operation by external signals*

**Example ▽** Operation example: Operate at 5 Hz.

| | Operation |
|---|---|
| ① | Screen at power-ON<br>The monitor display appears. |
| ② | Turning ON the JOG signal<br>Turn ON the JOG switch (JOG). The inverter is set ready for the JOG operation. |
| ③ | Start ➔ acceleration ➔ constant speed<br>Turn ON the start switch (STF or STR). The frequency value on the indication increases in Pr. 16 "Jog acceleration/deceleration time", and "5.00" (5.00 Hz) appears. [FWD] indicator is lit during the forward rotation, and [REV] indicator is lit during the reverse rotation. |
| ④ | Deceleration ➔ stop<br>Turn OFF the start switch (STF or STR). The frequency value on the indication decreases in Pr. 16 "Jog acceleration/deceleration time", and the motor stops rotating with "0.00" (0.00 Hz) displayed. [FWD] or [REV] indicator turns OFF. Turn OFF the JOG switch (JOG). |
| ⑤ | Stop<br>Turn OFF the start switch (STF or STR). [FWD] or [REV] indicator turns OFF. |

***Tab. 4-21:*** *JOG operation in the external operation mode*

△

**NOTES**

To change the running frequency, change Pr. 15 "Jog frequency" (initial value "5 Hz").

To change the acceleration/deceleration time, change Pr. 16 "Jog acceleration/deceleration time" (initial value "0.5 s").

| Parameters referred to | | | |
|---|---|---|---|
| Pr. 15 | Jog frequency | => | page 5-278 |
| Pr. 16 | Jog acceleration/deceleration time | => | page 5-278 |
| Pr. 79 | Operation mode selection | => | page 5-255 |

## 4.7.2 JOG operation from the operation panel

**NOTE** Operate only while FWD or REV key is pressed.

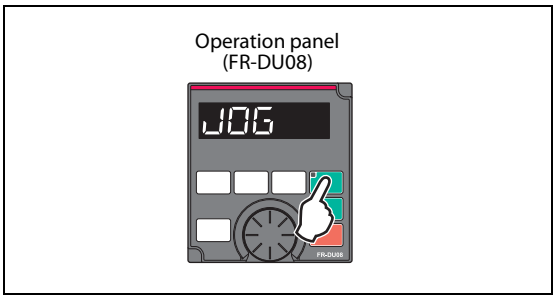


***Fig. 4-13:*** *Connection example for jog operation performed from PU*

I002433E

**Example ▽** Operation example: Operate at 5 Hz.

| Operation |
|---|
| ① Screen at power-ON<br>The monitor display appears. |
| ② Changing the operation mode<br>Press [PU/EXT] twice to choose the PUJOG operation mode. The monitor displays JOG, and [PU] indicator is lit. |
| ③ Start ➔ acceleration ➔ constant speed<br>Keep pressing [FWD] or [REV]. The frequency value on the indication increases in Pr. 16 "Jog acceleration/deceleration time", and "5.00" (5.00 Hz) appears. |
| ④ Deceleration ➔ stop<br>Release [FWD] or [REV]. The frequency value on the indication decreases in Pr. 16 "Jog acceleration/deceleration time", and the motor stops rotating with "0.00" (0.00 Hz) displayed. |

***Tab. 4-22:*** *JOG operation performed from PU*

△

**NOTES** To change the running frequency, change Pr. 15 "Jog frequency" (initial value "5 Hz").

To change the acceleration/deceleration time, change Pr. 16 "Jog acceleration/deceleration time" (initial value "0.5 s").

| Parameters referred to | | | |
|---|---|---|---|
| Pr. 15 | Jog frequency | => | page 5-278 |
| Pr. 16 | Jog acceleration/deceleration time | => | page 5-278 |

# 5 Parameters

The following marks are used to indicate the controls as below. (Parameters without any mark are valid for all control.)

| Mark | Control method | Applied motor |
|---|---|---|
| V/F | V/F control | Three-phase induction motor |
| Magnetic flux | Advanced magnetic flux vector control | |
| Sensorless | Real sensorless vector control | |
| Vector | Vector control | |
| PM | PM sensorless vector control | IPM motor |

The setting range and the initial value of parameters differ depending on the structure or functions of the inverter. The following common designations are used for each type of the inverter models.

| Inverter model | Common designation |
|---|---|
| FR-A8□0 | Standard model |
| FR-A8□2 | Separated converter type |
| FR-A8□6 | IP55 compatible model |

***Tab. 5-1:*** *Designation of the inverter model*

# 5.1 Parameter List

## 5.1.1 Parameter list (by number)

For simple variable-speed operation of the inverter, the initial value of the parameters may be used as they are. Set the necessary parameters to meet the load and operational specifications. Parameter setting, change and check can be made from the operation panel (FR-DU08).

**NOTES**

Simple indicates simple mode parameters. Use Pr. 160 "User group read selection" to switch between the simple mode and extended mode (initially set to extended mode).

Parameter setting may be restricted in some operating statuses. Use Pr. 77 "Parameter write selection" to change the setting.

Refer to Appendix A.3 (page A-5) for instruction codes for communication and availability of parameter clear, all clear, and parameter copy of each parameter.

| Function | Pr. | Pr. group | Name | Setting range | Minimum setting increments | Initial value FM | Initial value CA | Refer to page | Customer setting |
|---|---|---|---|---|---|---|---|---|---|
| Basic functions | 0 | G000 | Torque boost Simple | 0 to 30% | 0.1% | 6% ① | | 5-629 | |
| | | | | | | 4% ① | | | |
| | | | | | | 3% ① | | | |
| | | | | | | 2% ① | | | |
| | | | | | | 1% ① | | | |
| | 1 | H400 | Maximum frequency Simple | 0 to 120 Hz | 0.01 Hz | 120 Hz ② | | 5-300 | |
| | | | | | | 60 Hz ③ | | | |
| | 2 | H401 | Minimum frequency Simple | 0 to 120 Hz | 0.01 Hz | 0 Hz | | 5-300 | |
| | 3 | G001 | Base frequency Simple | 0 to 590 Hz | 0.01 Hz | 60 Hz | 50 Hz | 5-631 | |
| | 4 | D301 | Multi-speed setting (high speed) Simple | 0 to 590 Hz | 0.01 Hz | 60 Hz | 50 Hz | 5-182 | |
| | 5 | D302 | Multi-speed setting (middle speed) Simple | 0 to 590 Hz | 0.01 Hz | 30 Hz | | 5-182 | |
| | 6 | D303 | Multi-speed setting (low speed) Simple | 0 to 590 Hz | 0.01 Hz | 10 Hz | | 5-182 | |
| | 7 | F010 | Acceleration time Simple | 0 to 3600 s | 0.1 s | 5 s ④ | | 5-225 | |
| | | | | | | 15 s ⑤ | | | |
| | 8 | F011 | Deceleration time Simple | 0 to 3600 s | 0.1 s | 5 s ④ | | 5-225 | |
| | | | | | | 15 s ⑤ | | | |
| | 9 | H000 | Electronic thermal O/L relay Simple | 0 to 500 A | 0.01 A ② | Rated inverter current | | 5-284, 5-66, 5-440 | |
| | | C103 | Rated motor current Simple | 0 to 3600 A | 0.1 A ③ | | | | |

***Tab. 5-2:*** *Parameter overview (by number) (1)*

| Function | Pr. | Pr. group | Name | Setting range | Minimum setting increments | Initial value FM | Initial value CA | Refer to page | Customer setting |
|---|---|---|---|---|---|---|---|---|---|
| DC injection brake | 10 | G100 | DC injection brake operation frequency | 0 to 120 Hz, 9999 | 0.01 Hz | 3 Hz | | 5-640 | |
| | 11 | G101 | DC injection brake operation time | 0 to 10 s, 8888 | 0.1 s | 0.5 s | | 5-640 | |
| | 12 | G110 | DC injection brake operation voltage | 0 to 30% | 0.1% | 4% ⑥ | | 5-640 | |
| | | | | | | 2% ⑥ | | | |
| | | | | | | 1% ⑥ | | | |
| — | 13 | F102 | Starting frequency | 0 to 60 Hz | 0.01 Hz | 0.5 Hz | | 5-243, 5-245 | |
| — | 14 | G003 | Load pattern selection | 0 to 5 | 1 | 0 | | 5-634 | |
| Jog operation | 15 | D200 | Jog frequency | 0 to 590 Hz | 0.01 Hz | 5 Hz | | 5-278 | |
| | 16 | F002 | Jog acceleration/deceleration time | 0 to 3600 s | 0.1 s | 0.5 s | | 5-278 | |
| — | 17 | T720 | MRS input selection | 0, 2, 4 | 1 | 0 | | 5-413 | |
| — | 18 | H402 | High speed maximum frequency | 0 to 590 Hz | 0.01 Hz | 120 Hz ② | | 5-300 | |
| | | | | | | 60 Hz ③ | | | |
| — | 19 | G002 | Base frequency voltage | 0 to 1000 V, 8888, 9999 | 0.1 V | 9999 | 8888 | 5-631 | |
| Acceleration/ deceleration times | 20 | F000 | Acceleration/deceleration reference frequency | 1 to 590 Hz | 0.01 Hz | 60 Hz | 50 Hz | 5-225 | |
| | 21 | F001 | Acceleration/deceleration time increments | 0, 1 | 1 | 0 | | 5-225 | |
| Stall prevention | 22 | H500 | Stall prevention operation level (Torque limit level) | 0 to 400% | 0.1% | 150% | | 5-83, 5-83 | |
| | 23 | H610 | Stall prevention operation level compensation factor at double speed | 0 to 200%, 9999 | 0.1% | 9999 | | 5-83 | |
| Multi-speed setting | 24 to 27 | D304 to D307 | Multi-speed setting (4 speed to 7 speed) | 0 to 590 Hz, 9999 | 0.01 Hz | 9999 | | 5-182 | |
| — | 28 | D300 | Multi-speed input compensation selection | 0, 1 | 1 | 0 | | 5-280 | |
| — | 29 | F100 | Acceleration/deceleration pattern selection | 0 to 6 | 1 | 0 | | 5-232 | |
| — | 30 | E300 | Regenerative function selection | 0 to 2, 10, 11, 20, 21, 100 to 102, 110, 111, 120, 121 ⑪ | 1 | 0 | | 5-652 | |
| | | | | 2, 10, 11, 102, 110, 111 ⑫ | | | | | |
| | | | | 0, 2, 10, 20, 100, 102, 110, 120 ⑬ | | | | | |
| Frequency junp | 31 | H420 | Frequency jump 1A | 0 to 590 Hz, 9999 | 0.01 Hz | 9999 | | 5-302 | |
| | 32 | H421 | Frequency jump 1B | 0 to 590 Hz, 9999 | 0.01 Hz | 9999 | | 5-302 | |
| | 33 | H422 | Frequency jump 2A | 0 to 590 Hz, 9999 | 0.01 Hz | 9999 | | 5-302 | |
| | 34 | H423 | Frequency jump 2B | 0 to 590 Hz, 9999 | 0.01 Hz | 9999 | | 5-302 | |
| | 35 | H424 | Frequency jump 3A | 0 to 590 Hz, 9999 | 0.01 Hz | 9999 | | 5-302 | |
| | 36 | H425 | Frequency jump 3B | 0 to 590 Hz, 9999 | 0.01 Hz | 9999 | | 5-302 | |
| — | 37 | M000 | Speed display | 0, 1 to 9998 | 1 | 0 | | 5-314 | |
| Frequency detection | 41 | M441 | Up-to-frequency sensitivity | 0 to 100% | 0.1% | 10% | | 5-361 | |
| | 42 | M442 | Output frequency detection | 0 to 590 Hz | 0.01 Hz | 6 Hz | | 5-361 | |
| | 43 | M443 | Output frequency detection for reverse rotation | 0 to 590 Hz, 9999 | 0.01 Hz | 9999 | | 5-361 | |

***Tab. 5-2:*** *Parameter overview (by number) (2)*

| Function | Pr. | Pr. group | Name | Setting range | Minimum setting increments | Initial value FM | Initial value CA | Refer to page | Customer setting |
|---|---|---|---|---|---|---|---|---|---|
| Second functions | 44 | F020 | Second acceleration/deceleration time | 0 to 3600 s | 0.1 s | 5 s | | 5-225, 5-530 | |
| | 45 | F021 | Second deceleration time | 0 to 3600 s, 9999 | 0.1 s | 9999 | | 5-225, 5-530 | |
| | 46 | G010 | Second torque boost | 0 to 30%, 9999 | 0.1% | 9999 | | 5-629 | |
| | 47 | G011 | Second V/F (base frequency) | 0 to 590 Hz, 9999 | 0.01 Hz | 9999 | | 5-631 | |
| | 48 | H600 | Second stall prevention operation level | 0 to 400% | 0.1% | 150% | | 5-304 | |
| | 49 | H601 | Second stall prevention operation frequency | 0 to 590 Hz, 9999 | 0.01 Hz | 0 Hz | | 5-304 | |
| | 50 | M444 | Second output frequency detection | 0 to 590 Hz | 0.01 Hz | 30 Hz | | 5-361 | |
| | 51 | H010 C203 | Second electronic thermal O/L relay Rated second motor current | 0 to 500 A, 9999 ② | 0.01 A | 9999 | | 5-284, 5-66, 5-440 | |
| | | | | 0 to 3600 A, 9999 ③ | 0.1 A | | | | |
| Monitor functions | 52 | M100 | Operation panel main monitor selection | 0, 5 to 14, 17 to 20, 22 to 35, 38, 40 to 45, 50 to 57, 61, 62, 64, 67, 87 to 98, 100 | 1 | 0 | | 5-317 | |
| | 54 | M300 | FM/CA terminal function selection | 1 to 3, 5 to 14, 17, 18, 21, 24, 32 to 34, 50, 52, 53, 61, 62, 67, 70, 87 to 90, 92, 93, 95, 97, 98 | 1 | 1 | | 5-330 | |
| | 55 | M040 | Frequency monitoring reference | 0 to 590 Hz | 0.01 Hz | 60 Hz | 50 Hz | 5-330 | |
| | 56 | M041 | Current monitoring reference | 0 to 500 A ② | 0.01 A | Rated inverter current | | 5-330 | |
| | | | | 0 to 3600 A ③ | 0.1 A | | | | |
| Automatic restart | 57 | A702 | Restart coasting time | 0, 0.1 to 30 s, 9999 | 0.1 s | 9999 | | 5-540, 5-549 | |
| | 58 | A703 | Restart cushion time | 0 to 60 s | 0.1 s | 1 s | | 5-540 | |
| — | 59 | F101 | Remote function selection | 0 to 3, 11 to 13 | 1 | 0 | | 5-239 | |
| — | 60 | G030 | Energy saving control selection | 0, 4, 9 | 1 | 0 | | 5-637 | |
| Automatic acceleration/ deceleration | 61 | F510 | Reference current | 0 to 500 A, 9999 ② | 0.01 A | 9999 | | 5-247, 5-252 | |
| | | | | 0 to 3600 A, 9999 ③ | 0.1 A | | | | |
| | 62 | F511 | Reference value at acceleration | 0 to 400%, 9999 | 0.1% | 9999 | | 5-247 | |
| | 63 | F512 | Reference value at deceleration | 0 to 400%, 9999 | 0.1% | 9999 | | 5-247 | |
| | 64 | F520 | Starting frequency for elevator mode | 0 to 10 Hz, 9999 | 0.01 Hz | 9999 | | 5-252 | |
| — | 65 | H300 | Retry selection | 0 to 5 | 1 | 0 | | 5-297 | |
| — | 66 | H611 | Stall prevention operation reduction starting frequency | 0 to 590 Hz | 0.01 Hz | 60 Hz | 50 Hz | 5-83 | |
| Retry | 67 | H301 | Number of retries at fault occurrence | 0 to 10, 101 to 110 | 1 | 0 | | 5-297 | |
| | 68 | H302 | Retry waiting time | 0.1 to 600 s | 0.1 s | 1 s | | 5-297 | |
| | 69 | H303 | Retry count display erase | 0 | 1 | 0 | | 5-297 | |
| — | 70 ⑭ | G107 | Special regenerative brake duty | 0 to 100% | 0.1% | 0% | | 5-652 | |
| — | 71 | C100 | Applied motor | 0 to 6, 13 to 16, 20, 23, 24, 30, 33, 34, 40, 43, 44, 50, 53, 54, 70, 73, 74, 330, 333, 334, 8090, 8093, 8094, 9090, 9093, 9094 | 1 | 0 | | 5-421, 5-426 5-440 | |

***Tab. 5-2:*** *Parameter overview (by number) (3)*

| Function | Pr. | Pr. group | Name | Setting range | Minimum setting increments | Initial value FM | Initial value CA | Refer to page | Customer setting |
|---|---|---|---|---|---|---|---|---|---|
| — | 72 | E600 | PWM frequency selection | 0 to 15 ② | 1 | 2 | | 5-211 | |
| | | | | 0 to 6, 25 ③ | | | | | |
| — | 73 | T000 | Analog input selection | 0 to 7, 10 to 17 | 1 | 1 | | 5-376, 5-382 | |
| — | 74 | T002 | Input filter time constant | 0 to 8 | 1 | 1 | | 5-386 | |
| — | 75 | — | Reset selection/disconnected PU detection/PU stop selection | 0 to 3, 14 to 17 ② | 1 | 14 | | 5-184 | |
| | | | | 0 to 3, 14 to 17, 100 to 103, 114 to 117 ③ | | | | | |
| | | E100 | Reset selection | 0, 1 | | 0 | | | |
| | | E101 | Disconnected PU detection | | | | | | |
| | | E102 | PU stop selection | | | 1 | | | |
| | | E107 | Reset limit | 0 ② | 1 | 0 | | | |
| | | | | 0, 1 ③ | | | | | |
| — | 76 | M510 | Fault code output selection | 0 to 2 | 1 | 0 | | 5-373 | |
| — | 77 | E400 | Parameter write selection | 0 to 2 | 1 | 0 | | 5-195 | |
| — | 78 | D020 | Reverse rotation prevention selection | 0 to 2 | 1 | 0 | | 5-273 | |
| — | 79 | D000 | Operation mode selection Simple | 0 to 4, 6, 7 | 1 | 0 | | 5-255, 5-264 | |

***Tab. 5-2:*** *Parameter overview (by number) (4)*

| Function | Pr. | Pr. group | Name | Setting range | Minimum setting increments | Initial value FM | Initial value CA | Refer to page | Customer setting |
|---|---|---|---|---|---|---|---|---|---|
| Motor constants | 80 | C101 | Motor capacity | 0.4 to 55 kW, 9999 ② | 0.01 kW ② | 9999 | | 5-55, 5-426, 5-440 | |
| | | | | 0 to 3600 kW, 9999 ③ | 0.1 kW ③ | | | | |
| | 81 | C102 | Number of motor poles | 2, 4, 6, 8, 10, 12, 9999 | 1 | 9999 | | 5-55, 5-426, 5-440 | |
| | 82 | C125 | Motor excitation current | 0 to 500 A, 9999 ② | 0.01 A ② | 9999 | | 5-426 | |
| | | | | 0 to 3600 A, 9999 ③ | 0.1 A ③ | | | | |
| | 83 | C104 | Rated motor voltage | 0 to 1000 V | 0.1 V | 200 V ⑦ | | 5-55, 5-426, 5-440 | |
| | | | | | | 400 V ⑧ | | | |
| | 84 | C105 | Rated motor frequency | 10 to 400 Hz, 9999 | 0.01 Hz | 9999 | | 5-55, 5-426, 5-440 | |
| | 89 | G932 | Speed control gain (Advanced magnetic flux vector) | 0 to 200%, 9999 | 0.1% | 9999 | | 5-426 | |
| | 90 | C120 | Motor constant (R1) | 0 to 50 Ω, 9999 ② | 0.001 Ω ② | 9999 | | 5-426, 5-440 | |
| | | | | 0 to 400 mΩ, 9999 ③ | 0.01 mΩ ③ | | | | |
| | 91 | C121 | Motor constant (R2) | 0 to 50 Ω, 9999 ② | 0.001 Ω ② | 9999 | | 5-426 | |
| | | | | 0 to 400 mΩ, 9999 ③ | 0.01 mΩ ③ | | | | |
| | 92 | C122 | Motor constant (L1)/d-shaft inductance (Ld) | 0 to 6000 mH, 9999 ② | 0.1 mH ② | 9999 | | 5-426, 5-440 | |
| | | | | 0 to 400 mH, 9999 ③ | 0.01 mH ③ | | | | |
| | 93 | C123 | Motor constant (L2)/q-shaft inductance (Lq) | 0 to 6000 mH, 9999 ② | 0.1 mH ② | 9999 | | 5-426, 5-440 | |
| | | | | 0 to 400 mH, 9999 ③ | 0.01 mH ③ | | | | |
| | 94 | C124 | Motor constant (X) | 0 to 100%, 9999 | 0.1% ② | 9999 | | 5-426 | |
| | | | | | 0.01% ③ | | | | |
| | 95 | C111 | Online auto tuning selection | 0 to 2 | 1 | 0 | | 5-451 | |
| | 96 | C110 | Auto tuning setting/status | 0, 1, 11, 101 | 1 | 0 | | 5-66, 5-440 | |
| Adjustable 5 points V/F | 100 | G040 | V/F1 (first frequency) | 0 to 590 Hz, 9999 | 0.01 Hz | 9999 | | 5-638 | |
| | 101 | G041 | V/F1 (first frequency voltage) | 0 to 1000 V | 0.1 V | 0 V | | 5-638 | |
| | 102 | G042 | V/F2 (second frequency) | 0 to 590 Hz, 9999 | 0.01 Hz | 9999 | | 5-638 | |
| | 103 | G043 | V/F2 (second frequency voltage) | 0 to 1000 V | 0.1 V | 0 V | | 5-638 | |
| | 104 | G044 | V/F3 (third frequency) | 0 to 590 Hz, 9999 | 0.01 Hz | 9999 | | 5-638 | |
| | 105 | G045 | V/F3 (third frequency voltage) | 0 to 1000 V | 0.1 V | 0 V | | 5-638 | |
| | 106 | G046 | V/F4 (fourth frequency) | 0 to 590 Hz, 9999 | 0.01 Hz | 9999 | | 5-638 | |
| | 107 | G047 | V/F4 (fourth frequency voltage) | 0 to 1000 V | 0.1 V | 0 V | | 5-638 | |
| | 108 | G048 | V/F5 (fifth frequency) | 0 to 590 Hz, 9999 | 0.01 Hz | 9999 | | 5-638 | |
| | 109 | G049 | V/F5 (fifth frequency voltage) | 0 to 1000 V | 0.1 V | 0 V | | 5-638 | |
| Third functions | 110 | F030 | Third acceleration/deceleration time | 0 to 3600 s, 9999 | 0.1 s | 9999 | | 5-225 | |
| | 111 | F031 | Third deceleration time | 0 to 3600 s, 9999 | 0.1 s | 9999 | | 5-225 | |
| | 112 | G020 | Third torque boost | 0 to 30%, 9999 | 0.1% | 9999 | | 5-629 | |
| | 113 | G021 | Third V/F (base frequency) | 0 to 590 Hz, 9999 | 0.01 Hz | 9999 | | 5-631 | |
| | 114 | H602 | Third stall prevention operation level | 0 to 400% | 0.1% | 150% | | 5-304 | |
| | 115 | H603 | Third stall prevention operation frequency | 0 to 590 Hz | 0.01 Hz | 0 Hz | | 5-304 | |
| | 116 | M445 | Third output frequency detection | 0 to 590 Hz | 0.01 Hz | 60 Hz | 50 Hz | 5-361 | |

***Tab. 5-2:*** *Parameter overview (by number) (5)*

| Function | Pr. | Pr. group | Name | Setting range | Minimum setting increments | Initial value FM | Initial value CA | Refer to page | Customer setting |
|---|---|---|---|---|---|---|---|---|---|
| PU connector communication | 117 | N020 | PU communication station number | 0 to 31 | 1 | 0 | | 5-587 | |
| | 118 | N021 | PU communication speed | 48, 96, 192, 384, 576, 768, 1152 | 1 | 192 | | 5-587 | |
| | 119 | — | PU communication stop bit length / data length | 0, 1, 10, 11 | 1 | 1 | | 5-587 | |
| | | N022 | PU communication data length | 0, 1 | | 0 | | | |
| | | N023 | PU communication stop bit length | 0, 1 | | 1 | | | |
| | 120 | N024 | PU communication parity check | 0 to 2 | 1 | 2 | | 5-587 | |
| | 121 | N025 | Number of PU communication retries | 0 to 10, 9999 | 1 | 1 | | 5-587 | |
| | 122 | N026 | PU communication check time interval | 0, 0.1 to 999.8 s, 9999 | 0.1 s | 9999 | | 5-587 | |
| | 123 | N027 | PU communication waiting time setting | 0 to 150 ms, 9999 | 1 | 9999 | | 5-587 | |
| | 124 | N028 | PU communication CR/LF selection | 0, 1, 2 | 1 | 1 | | 5-587 | |
| — | 125 | T022 | Terminal 2 frequency setting gain frequency Simple | 0 to 590 Hz | 0.01 Hz | 60 Hz | 50 Hz | 5-388 | |
| — | 126 | T042 | Terminal 4 frequency setting gain frequency Simple | 0 to 590 Hz | 0.01 Hz | 60 Hz | 50 Hz | 5-388 | |
| PID operation | 127 | A612 | PID control automatic switchover frequency | 0 to 590 Hz, 9999 | 0.01 Hz | 9999 | | 5-504 | |
| | 128 | A610 | PID action selection | 0, 10, 11, 20, 21, 40 to 43, 50, 51, 60, 61, 70, 71, 80, 81, 90, 91, 100, 101, 1000, 1001, 1010, 1011, 2000, 2001, 2010, 2011 | 1 | 0 | | 5-504, 5-530 | |
| | 129 | A613 | PID proportional band | 0.1 to 1000%, 9999 | 0.1% | 100% | | 5-504, 5-530 | |
| | 130 | A614 | PID integral time | 0.1 to 3600 s, 9999 | 0.1 s | 1 s | | 5-504, 5-530 | |
| | 131 | A601 | PID upper limit | 0 to 100%, 9999 | 0.1% | 9999 | | 5-504, 5-530 | |
| | 132 | A602 | PID lower limit | 0 to 100%, 9999 | 0.1% | 9999 | | 5-504, 5-530 | |
| | 133 | A611 | PID action set point | 0 to 100%, 9999 | 0.01% | 9999 | | 5-504, 5-530 | |
| | 134 | A615 | PID differential time | 0.01 to 10 s, 9999 | 0.01 s | 9999 | | 5-504, 5-530 | |
| Bypass | 135 | A000 | Electronic bypass sequence selection | 0, 1 | 1 | 0 | | 5-457 | |
| | 136 | A001 | MC switchover interlock time | 0 to 100 s | 0.1 s | 1 s | | 5-457 | |
| | 137 | A002 | Start waiting time | 0 to 100 s | 0.1 s | 0.5 s | | 5-457 | |
| | 138 | A003 | Bypass selection at a fault | 0, 1 | 1 | 0 | | 5-457 | |
| | 139 | A004 | Automatic switchover frequency from inverter to bypass operation | 0 to 60 Hz, 9999 | 0.01 Hz | 9999 | | 5-457 | |
| Backlash measures | 140 | F200 | Backlash acceleration stopping frequency | 0 to 590 Hz | 0.01 Hz | 1 Hz | | 5-232 | |
| | 141 | F201 | Backlash acceleration stopping time | 0 to 360 s | 0.1 s | 0.5 s | | 5-232 | |
| | 142 | F202 | Backlash deceleration stopping frequency | 0 to 590 Hz | 0.01 Hz | 1 Hz | | 5-232 | |
| | 143 | F203 | Backlash deceleration stopping time | 0 to 360 s | 0.1 s | 0.5 s | | 5-232 | |
| — | 144 | M002 | Speed setting switchover | 0, 2, 4, 6, 8, 10, 12, 102, 104, 106, 108, 110, 112 | 1 | 4 | | 5-314 | |
| PU | 145 | E103 | PU display language selection | 0 to 7 | 1 | 1 | | 5-188 | |

***Tab. 5-2:*** *Parameter overview (by number) (6)*

| Function | Pr. | Pr. group | Name | Setting range | Minimum setting increments | Initial value FM | Initial value CA | Refer to page | Customer setting |
|---|---|---|---|---|---|---|---|---|---|
| — | 147 | F022 | Acceleration/deceleration time switching frequency | 0 to 590 Hz, 9999 | 0.01 Hz | 9999 | | 5-225 | |
| Current detection | 148 | H620 | Stall prevention level at 0 V input | 0 to 400% | 0.1% | 150% | | 5-83 | |
| | 149 | H621 | Stall prevention level at 10 V input | 0 to 400% | 0.1% | 200% | | 5-83 | |
| | 150 | M460 | Output current detection level | 0 to 400% | 0.1% | 150% | | 5-365 | |
| | 151 | M461 | Output current detection signal delay time | 0 to 10 s | 0.1 s | 0 s | | 5-365 | |
| | 152 | M462 | Zero current detection level | 0 to 400% | 0.1% | 5% | | 5-365 | |
| | 153 | M463 | Zero current detection time | 0 to 10 s | 0.01 s | 0.5 s | | 5-365 | |
| — | 154 | H631 | Voltage reduction selection during stall prevention operation | 0, 1, 10, 11 | 1 | 1 | | 5-83 | |
| — | 155 | T730 | RT signal function validity condition selection | 0, 10 | 1 | 0 | | 5-415 | |
| — | 156 | H501 | Stall prevention operation selection | 0 to 31, 100, 101 | 1 | 0 | | 5-83 | |
| — | 157 | M430 | OL signal output timer | 0 to 25 s, 9999 | 0.1 s | 0 s | | 5-83, 5-83 | |
| — | 158 | M301 | AM terminal function selection | 1 to 3, 5 to 14, 17, 18, 21, 24, 32 to 34, 50, 52 to 54, 61, 62, 67, 70, 87 to 90, 91 to 98 | 1 | 1 | | 5-330 | |
| — | 159 | A005 | Automatic switchover frequency range from bypass to inverter operation | 0 to 10 Hz, 9999 | 0.01 Hz | 9999 | | 5-457 | |
| — | 160 | E440 | User group read selection Simple | 0, 1, 9999 | 1 | 0 | | 5-208 | |
| — | 161 | E200 | Frequency setting/key lock operation selection | 0, 1, 10, 11 | 1 | 0 | | 5-190 | |
| Automatic restart functions | 162 | A700 | Automatic restart after instantaneous power failure selection | 0 to 3, 10 to 13 | 1 | 0 | | 5-540, 5-549 | |
| | 163 | A704 | First cushion time for restart | 0 to 20 s | 0.1 s | 0 s | | 5-540 | |
| | 164 | A705 | First cushion voltage for restart | 0 to 100% | 0.1% | 0% | | 5-540 | |
| | 165 | A710 | Stall prevention operation level for restart | 0 to 400% | 0.1% | 150% | | 5-540 | |
| Current detection | 166 | M433 | Output current detection signal retention time | 0 to 10 s, 9999 | 0.1 s | 0.1 s | | 5-365 | |
| | 167 | M464 | Output current detection operation selection | 0, 1, 10, 11 | 1 | 0 | | 5-365 | |
| — | 168 | E000 | Parameter for manufacturer setting. Do not set. | | | | | | |
| | | E080 | | | | | | | |
| — | 169 | E001 | | | | | | | |
| | | E081 | | | | | | | |
| Cumulative monitor clear | 170 | M020 | Watt-hour meter clear | 0, 10, 9999 | 1 | 9999 | | 5-317 | |
| | 171 | M030 | Operation hour meter clear | 0, 9999 | 1 | 9999 | | 5-317 | |
| User group | 172 | E441 | User group registered display/batch clear | 9999, (0 to 16) | 1 | 0 | | 5-208 | |
| | 173 | E442 | User group registration | 0 to 1999, 9999 | 1 | 9999 | | 5-208 | |
| | 174 | E443 | User group clear | 0 to 1999, 9999 | 1 | 9999 | | 5-208 | |

***Tab. 5-2:*** *Parameter overview (by number) (7)*

| Function | Pr. | Pr. group | Name | Setting range | Minimum setting increments | Initial value FM | Initial value CA | Refer to page | Customer setting |
|---|---|---|---|---|---|---|---|---|---|
| Input terminal function assignment | 178 | T700 | STF terminal function selection | 0 to 20, 22 to 28, 37, 42 to 47, 50, 51, 60, 62, 64 to 74, 76 to 80, 87, 92, 93, 9999 | 1 | 60 | | 5-409 | |
| | 179 | T701 | STR terminal function selection | 0 to 20, 22 to 28, 37, 42 to 47, 50, 51, 61, 62, 64 to 74, 76 to 80, 87, 92, 93, 9999 | 1 | 61 | | 5-409 | |
| | 180 | T702 | RL terminal function selection | 0 to 20, 22 to 28, 37, 42 to 47, 50, 51, 62, 64 to 74, 76 to 80, 87, 92, 93, 9999 | 1 | 0 | | 5-409 | |
| | 181 | T703 | RM terminal function selection | | 1 | 1 | | 5-409 | |
| | 182 | T704 | RH terminal function selection | | 1 | 2 | | 5-409 | |
| | 183 | T705 | RT terminal function selection | | 1 | 3 | | 5-409 | |
| | 184 | T706 | AU terminal function selection | | 1 | 4 | | 5-409 | |
| | 185 | T707 | JOG terminal function selection | | 1 | 5 | | 5-409 | |
| | 186 | T708 | CS terminal function selection | | 1 | 6 | | 5-409 | |
| | 187 | T709 | MRS terminal function selection | | 1 | 24 ⑪⑬ | 10 ⑫ | 5-409 | |
| | 188 | T710 | STOP terminal function selection | | 1 | 25 | | 5-409 | |
| | 189 | T711 | RES terminal function selection | | 1 | 62 | | 5-409 | |
| Output terminal function assignment | 190 | M400 | RUN terminal function selection | 0 to 8, 10 to 20, 22, 25 to 28, 30 to 36, 38 to 54, 56, 57, 60, 61, 63, 64, 68, 70, 79, 84, 85, 90 to 99, 100 to 108, 110 to 116, 120, 122, 125 to 128, 130 to 136, 138 to 154, 156, 157, 160, 161, 163, 164, 168, 170, 179, 184, 185, 190 to 199, 200 to 208, 300 to 308, 9999 | 1 | 0 | | 5-350 | |
| | 191 | M401 | SU terminal function selection | | 1 | 1 | | 5-350 | |
| | 192 | M402 | IPF terminal function selection | | 1 | 2 ⑪⑬ | 9999 ⑫ | 5-350 | |
| | 193 | M403 | OL terminal function selection | | 1 | 3 | | 5-350 | |
| | 194 | M404 | FU terminal function selection | | 1 | 4 | | 5-350 | |
| | 195 | M405 | ABC1 terminal function selection | 0 to 8, 10 to 20, 22, 25 to 28, 30 to 36, 38 to 54, 56, 57, 60, 61, 63, 64, 68, 70, 79, 84, 85, 90, 91, 94 to 99, 100 to 108, 110 to 116, 120, 122, 125 to 128, 130 to 136, 138 to 154, 156, 157, 160, 161, 163, 164, 168, 170, 179, 184, 185, 190 , 191, 194 to 199, 200 to 208, 300 to 308, 9999 | 1 | 99 | | 5-350 | |
| | 196 | M406 | ABC2 terminal function selection | | 1 | 9999 | | 5-350 | |
| Multi-speed setting | 232 to 239 | D308 to D315 | Multi-speed setting (8 speed to 15 speed) | 0 to 590 Hz, 9999 | 0.01 Hz | 9999 | | 5-182 | |
| — | 240 | E601 | Soft-PWM operation selection | 0, 1 | 1 | 1 | | 5-211 | |
| — | 241 | M043 | Analog input display unit switchover | 0, 1 | 1 | 0 | | 5-388 | |

***Tab. 5-2:*** *Parameter overview (by number) (8)*

| Function | Pr. | Pr. group | Name | Setting range | Minimum setting increments | Initial value FM | Initial value CA | Refer to page | Customer setting |
|---|---|---|---|---|---|---|---|---|---|
| — | 242 | T021 | Terminal 1 added compensation amount (terminal 2) | 0 to 100% | 0.1% | 100% | | 5-382 | |
| — | 243 | T041 | Terminal 1 added compensation amount (terminal 4) | 0 to 100% | 0.1% | 75% | | 5-382 | |
| — | 244 | H100 | Cooling fan operation selection | 0, 1, 101 to 105 | 1 | 1 | | 5-293 | |
| Slip compensation | 245 | G203 | Rated slip | 0 to 50%, 9999 | 0.01% | 9999 | | 5-668 | |
| | 246 | G204 | Slip compensation time constant | 0.01 to 10 s | 0.01 s | 0.5 s | | 5-668 | |
| | 247 | G205 | Constant-power range slip compensation selection | 0, 9999 | 1 | 9999 | | 5-668 | |
| — | 248 | A006 | Self power management selection | 0 to 2 | 1 | 0 | | 5-465 | |
| — | 249 | H101 | Earth (ground) fault detection at start | 0, 1 | 1 | 0 | | 5-417 | |
| — | 250 | G106 | Stop selection | 0 to 100 s, 1000 to 1100 s, 8888, 9999 | 0.1 s | 9999 | | 5-417 | |
| — | 251 | H200 | Output phase loss protection selection | 0, 1 | 1 | 1 | | 5-296 | |
| Frequency compensation function | 252 | T050 | Override bias | 0 to 200% | 0.1% | 50% | | 5-382 | |
| | 253 | T051 | Override gain | 0 to 200% | 0.1% | 150% | | 5-382 | |
| — | 254 | A007 | Main circuit power OFF waiting time | 0 to 3600 s, 9999 | 1 s | 600 s | | 5-465 | |
| Life check | 255 | E700 | Life alarm status display | (0 to 15) | 1 | 0 | | 5-214 | |
| | 256 ⑮ | E701 | Inrush current limit circuit life display | (0 to 100%) | 1% | 100% | | 5-214 | |
| | 257 | E702 | Control circuit capacitor life display | (0 to 100%) | 1% | 100% | | 5-214 | |
| | 258 ⑮ | E703 | Main circuit capacitor life display | (0 to 100%) | 1% | 100% | | 5-214 | |
| | 259 ⑮ | E704 | Main circuit capacitor life measuring | 0, 1 | 1 | 0 | | 5-214 | |
| — | 260 | E602 | PWM frequency automatic switchover | 0, 1 | 1 | 1 | | 5-211 | |
| Power failure stop | 261 ⑮ | A730 | Power failure stop selection | 0 to 2, 11, 12, 21, 22 | 1 | 0 | | 5-558 | |
| | 262 ⑮ | A731 | Subtracted frequency at deceleration start | 0 to 20 Hz | 0.01 Hz | 3 Hz | | 5-558 | |
| | 263 ⑮ | A732 | Subtraction starting frequency | 0 to 590 Hz, 9999 | 0.01 Hz | 60 Hz | 50 Hz | 5-558 | |
| | 264 ⑮ | A733 | Power-failure deceleration time 1 | 0 to 3600 s | 0.1 s | 5 s | | 5-558 | |
| | 265 ⑮ | A734 | Power-failure deceleration time 2 | 0 to 3600, 9999 | 0.1 s | 9999 | | 5-558 | |
| | 266 ⑮ | A735 | Power failure deceleration time switchover frequency | 0 to 590 Hz | 0.01 Hz | 60 Hz | 50 Hz | 5-558 | |
| — | 267 | T001 | Terminal 4 input selection | 0, 1, 2 | 1 | 0 | | 5-376 | |
| — | 268 | M022 | Monitor decimal digits selection | 0, 1, 9999 | 1 | 9999 | | 5-317 | |
| — | 269 | E023 | Parameter for manufacturer setting. Do not set. | | | | | | |
| — | 270 | A200 | Stop-on contact/load torque high-speed frequency control selection | 0 to 3, 11, 13 | 1 | 0 | | 5-474, 5-478 | |
| Load torque high speed frequency control | 271 | A201 | High-speed setting maximum current | 0 to 400% | 0.1% | 50% | | 5-478 | |
| | 272 | A202 | Middle-speed setting minimum current | 0 to 400% | 0.1% | 100% | | 5-478 | |
| | 273 | A203 | Current averaging range | 0 to 590 Hz, 9999 | 0.01 Hz | 9999 | | 5-478 | |
| | 274 | A204 | Current averaging filter time constant | 1 to 4000 | 1 | 16 | | 5-478 | |

***Tab. 5-2:*** *Parameter overview (by number) (9)*

| Function | Pr. | Pr. group | Name | Setting range | Minimum setting increments | Initial value FM | Initial value CA | Refer to page | Customer setting |
|---|---|---|---|---|---|---|---|---|---|
| Stop-on contact control | 275 | A205 | Stop-on contact excitation current low-speed multiplying factor | 50 to 300%, 9999 | 0.1% | 9999 | | 5-474 | |
| | 276 | A206 | PWM carrier frequency at stop-on contact | 0 to 9, 9999 ② | 1 | 9999 | | 5-474 | |
| | | | | 0 to 4, 9999 ③ | | | | | |
| Brake sequence function | 278 | A100 | Brake opening frequency | 0 to 30 Hz | 0.01 Hz | 3 Hz | | 5-469 | |
| | 279 | A101 | Brake opening current | 0 to 400% | 0.1% | 130% | | 5-469 | |
| | 280 | A102 | Brake opening current detection time | 0 to 2 s | 0.1 s | 0.3 s | | 5-469 | |
| | 281 | A103 | Brake operation time at start | 0 to 5 s | 0.1 s | 0.3 s | | 5-469 | |
| | 282 | A104 | Brake operation frequency | 0 to 30 Hz | 0.01 Hz | 6 Hz | | 5-469 | |
| | 283 | A105 | Brake operation time at stop | 0 to 5 s | 0.1 s | 0.3 s | | 5-469 | |
| | 284 ⑮ | A106 | Deceleration detection function selection | 0, 1 | 1 | 0 | | 5-469 | |
| | 285 | A107 | Overspeed detection frequency | 0 to 30 Hz, 9999 | 0.01 Hz | 9999 | | 5-115, 5-469 5-669 | |
| | | H416 | Speed deviation excess detection frequency | | | | | | |
| Droop control | 286 | G400 | Droop gain | 0 to 100% | 0.1% | 0% | | 5-672 | |
| | 287 | G401 | Droop filter time constant | 0 to 1 s | 0.01 s | 0.3 s | | 5-672 | |
| | 288 | G402 | Droop function activation selection | 0 to 2, 10, 11 | 1 | 0 | | 5-672 | |
| — | 289 | M431 | Inverter output terminal filter | 5 to 50 ms, 9999 | 1 ms | 9999 | | 5-350 | |
| — | 290 | M044 | Monitor negative output selection | 0 to 7 | 1 | 0 | | 5-317, 5-330 | |
| — | 291 | D100 | Pulse train I/O selection | 0, 1, 10, 11, 20, 21, 100 (FM Type) | 1 | 0 | | 5-274, 5-330 | |
| | | | | 0, 1 (CA Type) | | | | | |
| — | 292 | A110 | Automatic acceleration/deceleration | 0, 1, 3, 5 to 8, 11 | 1 | 0 | | 5-247, 5-252, 5-469 | |
| | | F500 | | | | | | | |
| — | 293 | F513 | Acceleration/deceleration separate selection | 0 to 2 | 1 | 0 | | 5-247 | |
| — | 294 ⑮ | A785 | UV avoidance voltage gain | 0 to 200% | 0.1% | 100% | | 5-558 | |
| — | 295 | E201 | Frequency change increment amount setting | 0, 0.01, 0.1, 1, 10 | 0.01 | 0 | | 5-192 | |
| Password function | 296 | E410 | Password lock level | 0 to 6, 99, 100 to 106, 199, 9999 | 1 | 9999 | | 5-199 | |
| | 297 | E411 | Password lock/unlock | (0 to 5), 1000 to 9998, 9999 | 1 | 9999 | | 5-199 | |
| — | 298 | A711 | Frequency search gain | 0 to 32767, 9999 | 1 | 9999 | | 5-540 | |
| — | 299 | A701 | Rotation direction detection selection at restarting | 0, 1, 9999 | 1 | 0 | | 5-540 | |

***Tab. 5-2:*** *Parameter overview (by number) (10)*

| Function | Pr. | Pr. group | Name | Setting range | Minimum setting increments | Initial value FM | Initial value CA | Refer to page | Customer setting |
|---|---|---|---|---|---|---|---|---|---|
| RS-485 communication | 331 | N030 | RS-485 communication station number | 0 to 31 (0 to 247) | 1 | 0 | | 5-587 | |
| | 332 | N031 | RS-485 communication speed | 3, 6, 12, 24, 48, 96, 192, 384, 576, 768, 1152 | 1 | 96 | | 5-587 | |
| | 333 | - | RS-485 communication stop bit length / data length | 0, 1, 10, 11 | 1 | 1 | | 5-587 | |
| | | N032 | PU communication data length | 0, 1 | 1 | 0 | | | |
| | | N033 | PU communication stop bit length | 0, 1 | 1 | 1 | | | |
| | 334 | N034 | RS-485 communication parity check selection | 0 to 2 | 1 | 2 | | 5-587 | |
| | 335 | N035 | RS-485 communication retry count | 0 to 10, 9999 | 1 | 1 | | 5-587 | |
| | 336 | N036 | RS-485 communication check time interval | 0 to 999.8 s, 9999 | 0.1 s | 0 s | | 5-587 | |
| | 337 | N037 | RS-485 communication waiting time setting | 0 to 150 ms, 9999 | 1 ms | 9999 | | 5-587 | |
| | 338 | D010 | Communication operation command source | 0, 1 | 1 | 0 | | 5-266 | |
| | 339 | D011 | Communication speed command source | 0 to 2 | 1 | 0 | | 5-266 | |
| | 340 | D001 | Communication startup mode selection | 0 to 2, 10, 12 | 1 | 0 | | 5-264 | |
| | 341 | N038 | RS-485 communication CR/LF selection | 0 to 2 | 1 | 1 | | 5-587 | |
| | 342 | N001 | Communication EEPROM write selection | 0, 1 | 1 | 0 | | 5-583 | |
| | 343 | N080 | Communication error count | — | 1 | 0 | | 5-607 | |
| Orientation control | 350 ⑨ | A510 | Stop position command selection | 0, 1, 9999 | 1 | 9999 | | 5-487 | |
| | 351 ⑨ | A526 | Orientation speed | 0 to 30 Hz | 0.01 Hz | 2 Hz | | 5-487 | |
| | 352 ⑨ | A527 | Creep speed | 0 to 10 Hz | 0.01 Hz | 0.5 Hz | | 5-487 | |
| | 353 ⑨ | A528 | Creep switchover position | 0 to 16383 | 1 | 511 | | 5-487 | |
| | 354 ⑨ | A529 | Position loop switchover position | 0 to 8191 | 1 | 96 | | 5-487 | |
| | 355 ⑨ | A530 | DC injection brake start position | 0 to 255 | 1 | 5 | | 5-487 | |
| | 356 ⑨ | A531 | Internal stop position command | 0 to 16383 | 1 | 0 | | 5-487 | |
| | 357 ⑨ | A532 | Orientation in-position zone | 0 to 255 | 1 | 5 | | 5-487 | |
| | 358 ⑨ | A533 | Servo torque selection | 0 to 13 | 1 | 1 | | 5-487 | |
| | 359 ⑨ | C141 | Encoder rotation direction | 0, 1, 100, 101 | 1 | 1 | | 2-72, 5-487, 5-669 | |
| | 360 ⑨ | A511 | 16-bit data selection | 0 to 127 | 1 | 0 | | 5-487 | |
| | 361 ⑨ | A512 | Position shift | 0 to 16383 | 1 | 0 | | 5-487 | |
| | 362 ⑨ | A520 | Orientation position loop gain | 0.1 to 100 | 0.1 | 1 | | 5-487 | |
| | 363 ⑨ | A521 | Completion signal output delay time | 0 to 5 s | 0.1 s | 0.5 s | | 5-487 | |
| | 364 ⑨ | A522 | Encoder stop check time | 0 to 5 s | 0.1 s | 0.5 s | | 5-487 | |
| | 365 ⑨ | A523 | Orientation limit | 0 to 60 s, 9999 | 1 s | 9999 | | 5-487 | |
| | 366 ⑨ | A524 | Recheck time | 0 to 5 s, 9999 | 0.1 s | 9999 | | 5-487 | |

***Tab. 5-2:*** *Parameter overview (by number) (11)*

| Function | Pr. | Pr. group | Name | Setting range | Minimum setting increments | Initial value FM | Initial value CA | Refer to page | Customer setting |
|---|---|---|---|---|---|---|---|---|---|
| Encoder feedback | 367 ⑨ | G240 | Speed feedback range | 0 to 590 Hz, 9999 | 0.01 Hz | 9999 | | 5-669 | |
| | 368 ⑨ | G241 | Feedback gain | 0 to 100 | 0.1 | 1 | | 5-669 | |
| | 369 ⑨ | C140 | Number of encoder pulses | 0 to 4096 | 1 | 1024 | | 2-72, 5-487, 5-669 | |
| | 374 | H800 | Overspeed detection level | 0 to 590 Hz, 9999 | 0.01 Hz | 9999 | | 5-312 | |
| | 376 ⑨ | C148 | Encoder signal loss detection enable/ disable selection | 0, 1 | 1 | 0 | | 5-455 | |
| S-pattern acceleration/ deceleration C | 380 | F300 | Acceleration S-pattern 1 | 0 to 50% | 1% | 0% | | 5-232 | |
| | 381 | F301 | Deceleration S-pattern 1 | 0 to 50% | 1% | 0% | | 5-232 | |
| | 382 | F302 | Acceleration S-pattern 2 | 0 to 50% | 1% | 0% | | 5-232 | |
| | 383 | F303 | Deceleration S-pattern 2 | 0 to 50% | 1% | 0% | | 5-232 | |
| Pulse train input | 384 | D101 | Input pulse division scaling factor | 0 to 250 | 1 | 0 | | 5-274 | |
| | 385 | D110 | Frequency for zero input pulse | 0 to 590 Hz | 0.01 Hz | 0 Hz | | 5-274 | |
| | 386 | D111 | Frequency for maximum input pulse | 0 to 590 Hz | 0.01 Hz | 60 Hz | 50 Hz | 5-274 | |
| Orientation control | 393 ⑨ | A525 | Orientation selection | 0 to 2 | 1 | 0 | | 5-487 | |
| | 396 ⑨ | A542 | Orientation speed gain (P term) | 0 to 1000 | 1 | 60 | | 5-487 | |
| | 397 ⑨ | A543 | Orientation speed integral time | 0 to 20 s | 0.001 s | 0.333 s | | 5-487 | |
| | 398 ⑨ | A544 | Orientation speed gain (D term) | 0 to 100 | 0.1 | 1 | | 5-487 | |
| | 399 ⑨ | A545 | Orientation deceleration ratio | 0 to 1000 | 1 | 20 | | 5-487 | |
| PLC function | 414 | A800 | PLC function operation selection | 0 to 2 | 1 | 0 | | 5-564 | |
| | 415 | A801 | Inverter operation lock mode setting | 0, 1 | 1 | 0 | | 5-564 | |
| | 416 | A802 | Pre-scale function selection | 0 to 5 | 1 | 0 | | 5-564 | |
| | 417 | A803 | Pre-scale setting value | 0 to 32767 | 1 | 1 | | 5-564 | |
| Position control | 419 | B000 | Position command source selection | 0, 2 | 1 | 0 | | 5-151, 5-167 | |
| | 420 | B001 | Command pulse scaling factor numerator (electronic gear numerator) | 1 to 32767 | 1 | 1 | | 5-171 | |
| | 421 | B002 | Command pulse multiplication denominator (electronic gear denominator) | 1 to 32767 | 1 | 1 | | 5-171 | |
| | 422 | B003 | Position control gain | 0 to 150 $s^{-1}$ | 1 $s^{-1}$ | 25 $s^{-1}$ | | 5-175 | |
| | 423 | B004 | Position feed forward gain | 0 to 100% | 1% | 0% | | 5-175 | |
| | 424 | B005 | Position command acceleration/ deceleration time constant | 0 to 50 s | 0.001 s | 0 s | | 5-171 | |
| | 425 | B006 | Position feed forward command filter | 0 to 5 s | 0.001 s | 0 s | | 5-175 | |
| | 426 | B007 | In-position width | 0 to 32767 pulse | 1 pulse | 100 pulse | | 5-173 | |
| | 427 | B008 | Excessive level error | 0 to 400 x $10^3$, 9999 | 1 x $10^3$ pulse | 40 x $10^3$ pulse | | 5-173 | |
| | 428 | B009 | Command pulse selection | 0 to 5 | 1 | 0 | | 5-167 | |
| | 429 | B010 | Clear signal selection | 0, 1 | 1 | 1 | | 5-167 | |
| | 430 | B011 | Pulse monitor selection | 0 to 5, 100 to 105, 1000 to 1005, 1100 to 1105, 8888, 9999 | 1 | 9999 | | 5-167 | |
| — | 446 | B012 | Model position control gain | 0 to 150 $s^{-1}$ | 1 $s^{-1}$ | 25 $s^{-1}$ | | 5-146 | |

***Tab. 5-2:*** *Parameter overview (by number) (12)*

| Function | Pr. | Pr. group | Name | Setting range | Minimum setting increments | Initial value FM | Initial value CA | Refer to page | Customer setting |
|---|---|---|---|---|---|---|---|---|---|
| Second motor constants | 450 | C200 | Second applied motor | 0, 1, 3 to 6, 13 to 16, 20, 23, 24, 30, 33, 34, 40, 43, 44, 50, 53, 54, 70, 73, 74, 330, 333, 334, 8093, 8094, 9090, 9093, 9094, 9999 | 1 | 9999 | | 5-421 | |
| | 451 | G300 | Second motor control method selection | 10 to 14, 20, 110 to 114, 9999 | 1 | 9999 | | 5-55 | |
| | 453 | C201 | Second motor capacity | 0.4 to 55 kW, 9999 ② | 0.01 kW ② | 9999 | | 5-426, 5-440 | |
| | | | | 0 to 3600 kW, 9999 ③ | 0.1 kW ③ | | | | |
| | 454 | C202 | Number of second motor poles | 2, 4, 6, 8, 10, 12, 9999 | 1 | 9999 | | 5-426, 5-440 | |
| | 455 | C225 | Second motor excitation current | 0 to 500 A, 9999 ② | 0.01 A ② | 9999 | | 5-426 | |
| | | | | 0 to 3600 A, 9999 ③ | 0.1 A ③ | | | | |
| | 456 | C204 | Rated second motor voltage | 0 to 1000 V | 0.1 V | 200 V ⑦ | | 5-426, 5-440 | |
| | | | | | | 400 V ⑧ | | | |
| | 457 | C205 | Rated second motor frequency | 10 to 400 Hz, 9999 | 0.01 Hz | 9999 | | 5-426, 5-440 | |
| | 458 | C220 | Second motor constant (R1) | 0 to 50 Ω, 9999 ② | 0.001 Ω ② | 9999 | | 5-426, 5-440 | |
| | | | | 0 to 400 mΩ, 9999 ③ | 0.01 mΩ ③ | | | | |
| | 459 | C221 | Second motor constant (R2) | 0 to 50 Ω, 9999 ② | 0.001 Ω ② | 9999 | | 5-426 | |
| | | | | 0 to 400 mΩ, 9999 ③ | 0.01 mΩ ③ | | | | |
| | 460 | C222 | Second motor constant (L1) / d-shaft inductance (Ld) | 0 to 6000 mH, 9999 ② | 0.1 mH ② | 9999 | | 5-426, 5-440 | |
| | | | | 0 to 400 mH, 9999 ③ | 0.01 mH ③ | | | | |
| | 461 | C223 | Second motor constant (L2) / q-shaft inductance (Lq) | 0 to 6000 mH, 9999 ② | 0.1 mH ② | 9999 | | 5-426, 5-440 | |
| | | | | 0 to 400 mH, 9999 ③ | 0.01 mH ③ | | | | |
| | 462 | C224 | Second motor constant (X) | 0 to 100%, 9999 | 0.1% ② | 9999 | | 5-426 | |
| | | | | | 0.01% ③ | | | | |
| | 463 | C210 | Second motor auto tuning setting/ status | 0, 1, 11, 101 | 1 | 0 | | 5-426, 5-440 | |

***Tab. 5-2:*** *Parameter overview (by number) (13)*

| Function | Pr. | Pr. group | Name | Setting range | Minimum setting increments | Initial value FM | Initial value CA | Refer to page | Customer setting |
|---|---|---|---|---|---|---|---|---|---|
| Simple position control | 464 | B020 | Digital position control sudden stop deceleration time | 0 to 360 s | 0.1 s | 0 s | | 5-151 | |
| | 465 | B021 | First target position lower 4 digits | 0 to 9999 | 1 | 0 | | 5-151 | |
| | 466 | B022 | First target position upper 4 digits | 0 to 9999 | 1 | 0 | | 5-151 | |
| | 467 | B023 | Second target position lower 4 digits | 0 to 9999 | 1 | 0 | | 5-151 | |
| | 468 | B024 | Second target position upper 4 digits | 0 to 9999 | 1 | 0 | | 5-151 | |
| | 469 | B025 | Third target position lower 4 digits | 0 to 9999 | 1 | 0 | | 5-151 | |
| | 470 | B026 | Third target position upper 4 digits | 0 to 9999 | 1 | 0 | | 5-151 | |
| | 471 | B027 | Fourth target position lower 4 digits | 0 to 9999 | 1 | 0 | | 5-151 | |
| | 472 | B028 | Fourth target position upper 4 digits | 0 to 9999 | 1 | 0 | | 5-151 | |
| | 473 | B029 | Fifth target position lower 4 digits | 0 to 9999 | 1 | 0 | | 5-151 | |
| | 474 | B030 | Fifth target position upper 4 digits | 0 to 9999 | 1 | 0 | | 5-151 | |
| | 475 | B031 | Sixth target position lower 4 digits | 0 to 9999 | 1 | 0 | | 5-151 | |
| | 476 | B032 | Sixth target position upper 4 digits | 0 to 9999 | 1 | 0 | | 5-151 | |
| | 477 | B033 | Seventh target position lower 4 digits | 0 to 9999 | 1 | 0 | | 5-151 | |
| | 478 | B034 | Seventh target position upper 4 digits | 0 to 9999 | 1 | 0 | | 5-151 | |
| | 479 | B035 | Eighth target position lower 4 digits | 0 to 9999 | 1 | 0 | | 5-151 | |
| | 480 | B036 | Eighth target position upper 4 digits | 0 to 9999 | 1 | 0 | | 5-151 | |
| | 481 | B037 | Ninth target position lower 4 digits | 0 to 9999 | 1 | 0 | | 5-151 | |
| | 482 | B038 | Ninth target position upper 4 digits | 0 to 9999 | 1 | 0 | | 5-151 | |
| | 483 | B039 | Tenth target position lower 4 digits | 0 to 9999 | 1 | 0 | | 5-151 | |
| | 484 | B040 | Tenth target position upper 4 digits | 0 to 9999 | 1 | 0 | | 5-151 | |
| | 485 | B041 | Eleventh target position lower 4 digits | 0 to 9999 | 1 | 0 | | 5-151 | |
| | 486 | B042 | Eleventh target position upper 4 digits | 0 to 9999 | 1 | 0 | | 5-151 | |
| | 487 | B043 | Twelfth target position lower 4 digits | 0 to 9999 | 1 | 0 | | 5-151 | |
| | 488 | B044 | Twelfth target position upper 4 digits | 0 to 9999 | 1 | 0 | | 5-151 | |
| | 489 | B045 | Thirteenth target position lower 4 digits | 0 to 9999 | 1 | 0 | | 5-151 | |
| | 490 | B046 | Thirteenth target position upper 4 digits | 0 to 9999 | 1 | 0 | | 5-151 | |
| | 491 | B047 | Fourteenth target position lower 4 digits | 0 to 9999 | 1 | 0 | | 5-151 | |
| | 492 | B048 | Fourteenth target position upper 4 digits | 0 to 9999 | 1 | 0 | | 5-151 | |
| | 493 | B049 | Fifteenth target position lower 4 digits | 0 to 9999 | 1 | 0 | | 5-151 | |
| | 494 | B050 | Fifteenth target position upper 4 digits | 0 to 9999 | 1 | 0 | | 5-151 | |
| Remote output | 495 | M500 | Remote output selection | 0, 1, 10, 11 | 1 | 0 | | 5-368 | |
| | 496 | M501 | Remote output data 1 | 0 to 4095 | 1 | 0 | | 5-368 | |
| | 497 | M502 | Remote output data 2 | 0 to 4095 | 1 | 0 | | 5-368 | |
| — | 498 | A804 | PLC function flash memory clear | 0, 9696 (0 to 9999) | 1 | 0 | | 5-564 | |
| — | 502 | N013 | Stop mode selection at communication error | 0 to 3 | 1 | 0 | | 5-583 | |

***Tab. 5-2:*** *Parameter overview (by number) (14)*

| Function | Pr. | Pr. group | Name | Setting range | Minimum setting increments | Initial value FM | Initial value CA | Refer to page | Customer setting |
|---|---|---|---|---|---|---|---|---|---|
| Maintenance | 503 | E710 | Maintenance timer 1 | 0 (1 to 9998) | 1 | 0 | | 5-219 | |
| | 504 | E711 | Maintenance timer 1 warning output set time | 0 to 9998, 9999 | 1 | 9999 | | 5-219 | |
| — | 505 | M001 | Speed setting reference | 1 to 590 Hz | 0.01 Hz | 60 Hz | 50 Hz | 5-314 | |
| S-pattern acceleration/ deceleration D | 516 | F400 | S-pattern time at a start of acceleration | 0.1 to 2.5 s | 0.1 s | 0.1 s | | 5-232 | |
| | 517 | F401 | S-pattern time at a completion of acceleration | 0.1 to 2.5 s | 0.1 s | 0.1 s | | 5-232 | |
| | 518 | F402 | S-pattern time at a start of deceleration | 0.1 to 2.5 s | 0.1 s | 0.1 s | | 5-232 | |
| | 519 | F403 | S-pattern time at a completion of deceleration | 0.1 to 2.5 s | 0.1 s | 0.1 s | | 5-232 | |
| — | 522 | G105 | Output stop frequency | 0 to 590 Hz, 9999 | 0.01 Hz | 9999 | | 5-648 | |
| — | 539 | N002 | Modbus-RTU communication check time interval | 0 to 999.8 s, 9999 | 0.1 s | 9999 | | 5-607 | |
| USB | 547 | N040 | USB communication station number | 0 to 31 | 1 | 0 | | 5-625 | |
| | 548 | N041 | USB communication check time interval | 0 to 999.8 s, 9999 | 0.1 s | 9999 | | 5-625 | |
| Communication | 549 | N000 | Protocol selection | 0, 1 | 1 | 0 | | 5-583 | |
| | 550 | D012 | NET mode operation command source selection | 0, 1, 9999 | 1 | 9999 | | 5-266 | |
| | 551 | D013 | PU mode operation command source selection | 1 to 3, 9999 | 1 | 9999 | | 5-266 | |
| — | 552 | H429 | Frequency jump range | 0 to 30 Hz, 9999 | 0.01 Hz | 9999 | | 5-302 | |
| PID control | 553 | A603 | PID deviation limit | 0.0 to 100%, 9999 | 0.1% | 9999 | | 5-504 | |
| | 554 | A604 | PID signal operation selection | 0 to 3, 10 to 13 | 1 | 0 | | 5-504 | |
| Current average value monitor | 555 | E720 | Current average time | 0.1 to 1 s | 0.1 s | 1 s | | 5-221 | |
| | 556 | E721 | Data output mask time | 0 to 20 s | 0.1 s | 0 s | | 5-221 | |
| | 557 | E722 | Current average value monitor signal output reference current | 0 to 500 A ② | 0.01 A ② | Rated inverter current | | 5-221 | |
| | | | | 0 to 3600 A ③ | 0.1 A ③ | | | | |
| — | 560 | A712 | Second frequency search gain | 0 to 32767, 9999 | 1 | 9999 | | 5-540 | |
| — | 561 | H020 | PTC thermistor protection level | 0.5 to 30 kΩ, 9999 | 0.01 kΩ | 9999 | | 5-284 | |
| — | 563 | M021 | Energization time carrying-over times | (0 to 65535) | 1 | 0 | | 5-317 | |
| — | 564 | M031 | Operating time carrying-over times | (0 to 65535) | 1 | 0 | | 5-317 | |
| Second motor constants | 569 | G942 | Second motor speed control gain | 0 to 200%, 9999 | 0.1% | 9999 | | 5-66 | |
| Multiple rating | 570 | E301 | Multiple rating setting | 0 to 3 ⑪ ⑫ | 1 | 2 | | 5-193 | |
| | | | | 1,2 ⑬ | | | | | |
| — | 571 | F103 | Holding time at a start | 0 to 10 s, 9999 | 0.1 s | 9999 | | 5-243 | |
| — | 573 | A680 / T052 | 4 mA input check selection | 1 to 4, 9999 | 1 | 9999 | | 5-386 | |
| — | 574 | C211 | Second motor online auto tuning | 0, 1 | 1 | 0 | | 5-451 | |

***Tab. 5-2:*** *Parameter overview (by number) (15)*

| Function | Pr. | Pr. group | Name | Setting range | Minimum setting increments | Initial value FM | Initial value CA | Refer to page | Customer setting |
|---|---|---|---|---|---|---|---|---|---|
| PID control | 575 | A621 | Output interruption detection time | 0 to 3600 s, 9999 | 0.1 s | 1 s | | 5-504 | |
| | 576 | A622 | Output interruption detection level | 0 to 590 Hz | 0.01 Hz | 0 Hz | | 5-504 | |
| | 577 | A623 | Output interruption cancel level | 900 to 1100% | 0.1% | 1000% | | 5-504 | |
| Traverse function | 592 | A300 | Traverse function selection | 0 to 2 | 1 | 0 | | 5-482 | |
| | 593 | A301 | Maximum amplitude amount | 0 to 25% | 0.1% | 10% | | 5-482 | |
| | 594 | A302 | Amplitude compensation amount during deceleration | 0 to 50% | 0.1% | 10% | | 5-482 | |
| | 595 | A303 | Amplitude compensation amount during acceleration | 0 to 50% | 0.1% | 10% | | 5-482 | |
| | 596 | A304 | Amplitude acceleration time | 0.1 to 3600 s | 0.1 s | 5 s | | 5-482 | |
| | 597 | A305 | Amplitude deceleration time | 0.1 to 3600 s | 0.1 s | 5 s | | 5-482 | |
| — | 598 | H102 | Undervoltage level | 350 to 430 V, 9999 | 0.1 V | 9999 | | 5-294 | |
| — | 599 | T721 | X10 terminal input selection | 0, 1 | 1 | 0 ⑪ ⑬ | 1 ⑫ | 5-652 | |
| Electronic thermal O/L relay | 600 | H001 | First free thermal reduction frequency 1 | 0 to 590 Hz, 9999 | 0.01 Hz | 9999 | | 5-284 | |
| | 601 | H002 | First free thermal reduction ratio 1 | 1 to 100% | 1% | 100% | | 5-284 | |
| | 602 | H003 | First free thermal reduction frequency 2 | 0 to 590 Hz, 9999 | 0.01 Hz | 9999 | | 5-284 | |
| | 603 | H004 | First free thermal reduction ratio 2 | 1 to 100% | 1% | 100% | | 5-284 | |
| | 604 | H005 | First free thermal reduction frequency 3 | 0 to 590 Hz, 9999 | 0.01 Hz | 9999 | | 5-284 | |
| | 607 | H006 | Motor permissible load level | 110 to 250% | 1% | 150% | | 5-284 | |
| | 608 | H016 | Second motor permissible load level | 110 to 250%, 9999 | 1% | 9999 | | 5-284 | |
| PID control | 609 | A624 | PID set point/deviation input selection | 1 to 5 | 1 | 2 | | 5-504, 5-530 | |
| | 610 | A625 | PID measured value input selection | 1 to 5 | 1 | 3 | | 5-504, 5-530 | |
| — | 611 | F003 | Acceleration time at a restart | 0 to 3600 s, 9999 | 0.1 s | 9999 | | 5-540, 5-549 | |
| Brake sequence function | 639 | A108 | Brake opening current selection | 0, 1 | 1 | 0 | | 5-469 | |
| | 640 | A109 | Brake operation frequency selection | 0, 1 | 1 | 0 | | 5-469 | |
| | 641 | A130 | Second brake sequence operation selection | 0, 7, 8, 9999 | 1 | 0 | | 5-469 | |
| | 642 | A120 | Second brake opening frequency | 0 to 30 Hz | 0.01 Hz | 3 Hz | | 5-469 | |
| | 643 | A121 | Second brake opening current | 0 to 400% | 0.1% | 130% | | 5-469 | |
| | 644 | A122 | Second brake opening current detection time | 0 to 2 s | 0.1 s | 0.3 s | | 5-469 | |
| | 645 | A123 | Second brake operation time at start | 0 to 5 s | 0.1 s | 0.3 s | | 5-469 | |
| | 646 | A124 | Second brake operation frequency | 0 to 30 Hz | 0.01 Hz | 6 Hz | | 5-469 | |
| | 647 | A125 | Second brake operation time at stop | 0 to 5 s | 0.1 s | 0.3 s | | 5-469 | |
| | 648 | A126 | Second deceleration detection function selection | 0, 1 | 1 | 0 | | 5-469 | |
| | 650 | A128 | Second brake opening current selection | 0, 1 | 1 | 0 | | 5-469 | |
| | 651 | A129 | Second brake operation frequency selection | 0, 1 | 1 | 0 | | 5-469 | |

***Tab. 5-2:*** *Parameter overview (by number) (16)*

| Function | Pr. | Pr. group | Name | Setting range | Minimum setting increments | Initial value FM | Initial value CA | Refer to page | Customer setting |
|---|---|---|---|---|---|---|---|---|---|
| Speed smoothing control | 653 | G410 | Speed smoothing control | 0 to 200% | 0.1% | 0% | | 5-675 | |
| | 654 | G411 | Speed smoothing cutoff frequency | 0 to 120 Hz | 0.01 Hz | 20 Hz | | 5-675 | |
| Analog remote output function | 655 | M530 | Analog remote output selection | 0, 1, 10, 11 | 1 | 0 | | 5-370 | |
| | 656 | M531 | Analog remote output 1 | 800 to 1200% | 0.1% | 1000% | | 5-370 | |
| | 657 | M532 | Analog remote output 2 | 800 to 1200% | 0.1% | 1000% | | 5-370 | |
| | 658 | M533 | Analog remote output 3 | 800 to 1200% | 0.1% | 1000% | | 5-370 | |
| | 659 | M534 | Analog remote output 4 | 800 to 1200% | 0.1% | 1000% | | 5-370 | |
| Increased magnetic excitation deceleration | 660 | G130 | Increased magnetic excitation deceleration operation selection | 0, 1 | 1 | 0 | | 5-666 | |
| | 661 | G131 | Magnetic excitation increase rate | 0 to 40%, 9999 | 0.1% | 9999 | | 5-666 | |
| | 662 | G132 | Increased magnetic excitation current level | 0 to 300% | 0.1% | 100% | | 5-666 | |
| — | 663 | M060 | Control circuit temperature signal output level | 0 to 100 °C | 1 °C | 0 °C | | 5-375 | |
| — | 665 | G125 | Regeneration avoidance frequency gain | 0 to 200% | 0.1% | 100% | | 5-662 | |
| — | 668 ⑮ | A786 | Power failure stop frequency gain | 0 to 200% | 0.1% | 100% | | 5-558 | |
| — | 684 | C000 | Tuning data unit switchover | 0, 1 | 1 | 0 | | 5-66, 5-440 | |
| Maintenance | 686 | E712 | Maintenance timer 2 | 0 (1 to 9998) | 1 | 0 | | 5-219 | |
| | 687 | E713 | Maintenance timer 2 warning output set time | 0 to 9998, 9999 | 1 | 9999 | | 5-219 | |
| | 688 | E714 | Maintenance timer 3 | 0 (1 to 9998) | 1 | 0 | | 5-219 | |
| | 689 | E715 | Maintenance timer 3 warning output set time | 0 to 9998, 9999 | 1 | 9999 | | 5-219 | |
| — | 690 | H881 | Deceleration check time | 0 to 3600 s, 9999 | 0.1 s | 1 s | | 5-115 | |
| Electronic thermal O/L relay | 692 | H011 | Second free thermal reduction frequency 1 | 0 to 590 Hz, 9999 | 0.01 Hz | 9999 | | 5-284 | |
| | 693 | H012 | Second free thermal reduction ratio 1 | 1 to 100% | 1% | 100% | | 5-284 | |
| | 694 | H013 | Second free thermal reduction frequency 2 | 0 to 590 Hz, 9999 | 0.01 Hz | 9999 | | 5-284 | |
| | 695 | H014 | Second free thermal reduction ratio 2 | 1 to 100% | 1% | 100% | | 5-284 | |
| | 696 | H015 | Second free thermal reduction frequency 3 | 0 to 590 Hz, 9999 | 0.01 Hz | 9999 | | 5-284 | |
| — | 699 | T740 | Input terminal filter | 5 to 50 ms, 9999 | 1 ms | 9999 | | 5-409 | |

***Tab. 5-2:*** *Parameter overview (by number) (17)*

| Function | Pr. | Pr. group | Name | Setting range | Minimum setting increments | Initial value | | Refer to page | Customer setting |
|---|---|---|---|---|---|---|---|---|---|
| | | | | | | FM | CA | | |
| Motor constants | 702 | C106 | Maximum motor frequency | 0 to 400 Hz, 9999 | 0.01 Hz | 9999 | | 5-440 | |
| | 706 | C106 | Induced voltage constant (phi f) | 0 to 5000 mV/(rad/s), 9999 | 0.1 mV/(rad/s) | 9999 | | 5-440 | |
| | 707 | C107 | Motor inertia (integer) | 10 to 999, 9999 | 1 | 9999 | | 5-440 | |
| | 711 | C131 | Motor Ld decay ratio | 0 to 100%, 9999 | 0.1% | 9999 | | 5-440 | |
| | 712 | C132 | Motor Lq decay ratio | 0 to 100%, 9999 | 0.1% | 9999 | | 5-440 | |
| | 717 | C182 | Starting resistance tuning compensation | 0 to 200%, 9999 | 0.1% | 9999 | | 5-440 | |
| | 721 | C185 | Starting magnetic pole position detection pulse width | 0 to 6000 µs, 10000 to 16000 µs, 9999 | 1 µs | 9999 | | 5-440 | |
| | 724 | C108 | Motor inertia (exponent) | 0 to 7, 9999 | 1 | 9999 | | 5-440 | |
| | 725 | C133 | Motor protection current level | 100 to 500%, 9999 | 0.1% | 9999 | | 5-440 | |
| | 738 | C230 | Second motor induced voltage constant (phi f) | 0 to 5000 mV/(rad/s), 9999 | 0.1 mV/(rad/s) | 9999 | | 5-440 | |
| | 739 | C231 | Second motor Ld decay ratio | 0 to 100%, 9999 | 0.1% | 9999 | | 5-440 | |
| | 740 | C232 | Second motor Lq decay ratio | 0 to 100%, 9999 | 0.1% | 9999 | | 5-440 | |
| | 741 | C282 | Second starting resistance tuning compensation | 0 to 200%, 9999 | 0.1% | 9999 | | 5-440 | |
| | 742 | C285 | Second motor magnetic pole detection pulse width | 0 to 6000 µs, 10000 to 16000 µs, 9999 | 1 µs | 9999 | | 5-440 | |
| | 743 | C206 | Second motor maximum frequency | 0 to 400 Hz, 9999 | 0.01 Hz | 9999 | | 5-440 | |
| | 744 | C207 | Second motor inertia (integer) | 10 to 999, 9999 | 1 | 9999 | | 5-440 | |
| | 745 | C208 | Second motor inertia (exponent) | 0 to 7, 9999 | 1 | 9999 | | 5-440 | |
| | 746 | C233 | Second motor protection current level | 100 to 500%, 9999 | 0.1% | 9999 | | 5-440 | |
| — | 747 | G350 | Second motor low-speed range torque characteristic selection | 0, 9999 | 1 | 9999 | | 5-74 | |
| PID control | 753 | A650 | Second PID action selection | 0, 10, 11, 20, 21, 50, 51, 60, 61, 70, 71, 80, 81, 90, 91, 100, 101, 1000, 1001, 1010, 1011, 2000, 2001, 2010, 2011 | 1 | 0 | | 5-504 | |
| | 754 | A652 | Second PID control automatic switchover frequency | 0 to 590 Hz, 9999 | 0.01 Hz | 9999 | | 5-504 | |
| | 755 | A651 | Second PID action set point | 0 to 100%, 9999 | 0.01% | 9999 | | 5-504 | |
| | 756 | A653 | Second PID proportional band | 0.1 to 1000%, 9999 | 0.1% | 100% | | 5-504 | |
| | 757 | A654 | Second PID integral time | 0.1 to 3600 s, 9999 | 0.1 s | 1 s | | 5-504 | |
| | 758 | A655 | Second PID differential time | 0.01 to 10 s, 9999 | 0.01 s | 9999 | | 5-504 | |
| | 759 | A600 | PID unit selection | 0 to 43, 9999 | 1 | 9999 | | 5-521 | |

***Tab. 5-2:*** *Parameter overview (by number) (18)*

| Function | Pr. | Pr. group | Name | Setting range | Minimum setting increments | Initial value FM | Initial value CA | Refer to page | Customer setting |
|---|---|---|---|---|---|---|---|---|---|
| PID pre-charge function | 760 | A616 | Pre-charge fault selection | 0, 1 | 1 | 0 | | 5-525 | |
| | 761 | A617 | Pre-charge ending level | 0 to 100%, 9999 | 0.1% | 9999 | | 5-525 | |
| | 762 | A618 | Pre-charge ending time | 0 to 3600 s, 9999 | 0.1 s | 9999 | | 5-525 | |
| | 763 | A619 | Pre-charge upper detection level | 0 to 100%, 9999 | 0.1% | 9999 | | 5-525 | |
| | 764 | A620 | Pre-charge time limit | 0 to 3600 s, 9999 | 0.1 s | 9999 | | 5-525 | |
| | 765 | A656 | Second pre-charge fault selection | 0, 1 | 1 | 0 | | 5-525 | |
| | 766 | A657 | Second pre-charge ending level | 0 to 100%, 9999 | 0.1% | 9999 | | 5-525 | |
| | 767 | A658 | Second pre-charge ending time | 0 to 3600 s, 9999 | 0.1 s | 9999 | | 5-525 | |
| | 768 | A659 | Second pre-charge upper detection level | 0 to 100%, 9999 | 0.1% | 9999 | | 5-525 | |
| | 769 | A660 | Second pre-charge time limit | 0 to 3600 s, 9999 | 0.1 s | 9999 | | 5-525 | |
| Monitor function | 774 | M101 | Operation panel monitor selection 1 | 1 to 3, 5 to 14, 17 to 20, 22 to 35, 38, 40 to 45, 50 to 57, 61, 62, 64, 67, 87 to 98, 100, 9999 | 1 | 9999 | | 5-317 | |
| | 775 | M102 | Operation panel monitor selection 2 | | 1 | 9999 | | 5-317 | |
| | 776 | M103 | Operation panel monitor selection 3 | | 1 | 9999 | | 5-317 | |
| — | 777 | A681<br>T053 | 4 mA input fault operation frequency | 0 to 590 Hz, 9999 | 0.01 Hz | 9999 | | 5-404 | |
| — | 778 | A682<br>T054 | 4 mA input check filter | 0 to 10 s | 0.01 s | 0 s | | 5-404 | |
| — | 779 | N014 | Operation frequency during communication error | 0 to 590 Hz, 9999 | 0.01 Hz | 9999 | | 5-583 | |
| — | 788 | G250 | Low speed range torque characteristic selection | 0, 9999 | 1 | 9999 | | 5-74 | |
| — | 791 | F070 | Acceleration time in low-speed range | 0 to 3600 s, 9999 | 0.1 s | 9999 | | 5-225 | |
| — | 792 | F071 | Deceleration time in low-speed range | 0 to 3600 s, 9999 | 0.1 s | 9999 | | 5-225 | |
| — | 799 | M520 | Pulse increment setting for output power | 0.1, 1, 10, 100, 1000 kWh | 0.1 kWh | 1 kWh | | 5-374 | |
| — | 800 | G200 | Control method selection | 0 to 6, 9 to 14, 20, 100 to 106, 109 to 114 | 1 | 20 | | 5-55 | |
| — | 802 | G102 | Pre-excitation selection | 0, 1 | 1 | 0 | | 5-640 | |
| Torque command | 803 | G210 | Constant output range torque characteristic selection | 0, 1, 10, 11 | 1 | 0 | | 5-83, 5-129 | |
| | 804 | D400 | Torque command source selection | 0, 1, 3 to 6 | 1 | 0 | | 5-129 | |
| | 805 | D401 | Torque command value (RAM) | 600 to 1400% | 1% | 1000% | | 5-129 | |
| | 806 | D402 | Torque command value (RAM, EEPROM) | 600 to 1400% | 1% | 1000% | | 5-129 | |
| Speed limit | 807 | H410 | Speed limit selection | 0 to 2 | 1 | 0 | | 5-133 | |
| | 808 | H411 | Forward rotation speed limit/speed limit | 0 to 400 Hz | 0.01 Hz | 60 Hz | 50 Hz | 5-133 | |
| | 809 | H412 | Reverse rotation speed limit/reverse-side speed limit | 0 to 400 Hz, 9999 | 0.01 Hz | 9999 | | 5-133 | |

***Tab. 5-2:*** *Parameter overview (by number) (19)*

| Function | Pr. | Pr. group | Name | Setting range | Minimum setting increments | Initial value FM | Initial value CA | Refer to page | Customer setting |
|---|---|---|---|---|---|---|---|---|---|
| Torque limit | 810 | H700 | Torque limit input method selection | 0, 1 | 1 | 0 | | 5-83 | |
| | 811 | D030 | Set resolution switchover | 0, 1, 10, 11 | 1 | 0 | | 5-83, 5-314 | |
| | 812 | H701 | Torque limit level (regeneration) | 0 to 400%, 9999 | 0.1% | 9999 | | 5-83 | |
| | 813 | H702 | Torque limit level (3rd quadrant) | 0 to 400%, 9999 | 0.1% | 9999 | | 5-83 | |
| | 814 | H703 | Torque limit level (4th quadrant) | 0 to 400%, 9999 | 0.1% | 9999 | | 5-83 | |
| | 815 | H710 | Torque limit level 2 | 0 to 400%, 9999 | 0.1% | 9999 | | 5-83 | |
| | 816 | H720 | Torque limit level during acceleration | 0 to 400%, 9999 | 0.1% | 9999 | | 5-83 | |
| | 817 | H721 | Torque limit level during deceleration | 0 to 400%, 9999 | 0.1% | 9999 | | 5-83 | |
| Easy gain tuning | 818 | C112 | Easy gain tuning response level setting | 1 to 15 | 1 | 2 | | 5-66 | |
| | 819 | C113 | Easy gain tuning selection | 0 to 2 | 1 | 0 | | 5-66 | |
| Adjustment function | 820 | G211 | Speed control P gain 1 | 0 to 1000% | 1% | 60% | | 5-66 | |
| | 821 | G212 | Speed control integral time 1 | 0 to 20 s | 0.001 s | 0.333 s | | 5-66 | |
| | 822 | T003 | Speed setting filter 1 | 0 to 5 s, 9999 | 0.001 s | 9999 | | 5-386 | |
| | 823 ⑨ | G215 | Speed detection filter 1 | 0 to 0.1 s | 0.001 s | 0.001 s | | 5-180 | |
| | 824 | G213 | Torque control P gain 1 (current loop proportional gain) | 0 to 500% | 1% | 100% | | 5-141 | |
| | 825 | G214 | Torque control integral time 1 (current loop integral time) | 0 to 500 ms | 0.1 ms | 5 ms | | 5-141 | |
| | 826 | T004 | Torque setting filter 1 | 0 to 5 s, 9999 | 0.001 s | 9999 | | 5-386 | |
| | 827 | G216 | Torque detection filter 1 | 0 to 0.1 s | 0.001 s | 0 s | | 5-180 | |
| | 828 | G224 | Model speed control gain | 0 to 1000% | 1% | 60% | | 5-106 | |
| | 830 | G311 | Speed control P gain 2 | 0 to 1000%, 9999 | 1% | 9999 | | 5-66 | |
| | 831 | G312 | Speed control integral time 2 | 0 to 20 s, 9999 | 0.001 s | 9999 | | 5-66 | |
| | 832 | T005 | Speed setting filter 2 | 0 to 5 s, 9999 | 0.001 s | 9999 | | 5-386 | |
| | 833 ⑨ | G315 | Speed detection filter 2 | 0 to 0.1 s, 9999 | 0.001 s | 9999 | | 5-180 | |
| | 834 | G313 | Torque control P gain 2 | 0 to 500%, 9999 | 1% | 9999 | | 5-141 | |
| | 835 | G314 | Torque control integral time 2 | 0 to 500 ms, 9999 | 0.1 ms | 9999 | | 5-141 | |
| | 836 | T006 | Torque setting filter 2 | 0 to 5 s, 9999 | 0.001 s | 9999 | | 5-386 | |
| | 837 | G316 | Torque detection filter 2 | 0 to 0.1 s, 9999 | 0.001 s | 9999 | | 5-180 | |

***Tab. 5-2:*** *Parameter overview (by number) (20)*

| Function | Pr. | Pr. group | Name | Setting range | Minimum setting increments | Initial value FM | Initial value CA | Refer to page | Customer setting |
|---|---|---|---|---|---|---|---|---|---|
| Torque bias | 840 ⑨ | G230 | Torque bias selection | 0 to 3, 24, 25, 9999 | 1 | 9999 | | 5-110 | |
| | 841 ⑨ | G231 | Torque bias 1 | 600 to 1400%, 9999 | 1% | 9999 | | 5-110 | |
| | 842 ⑨ | G232 | Torque bias 2 | 600 to 1400%, 9999 | 1% | 9999 | | 5-110 | |
| | 843 ⑨ | G233 | Torque bias 3 | 600 to 1400%, 9999 | 1% | 9999 | | 5-110 | |
| | 844 ⑨ | G234 | Torque bias filter | 0 to 5s, 9999 | 0.001 s | 9999 | | 5-110 | |
| | 845 ⑨ | G235 | Torque bias operation time | 0 to 5s, 9999 | 0.01 s | 9999 | | 5-110 | |
| | 846 ⑨ | G236 | Torque bias balance compensation | 0 to 10 V, 9999 | 0.1 V | 9999 | | 5-110 | |
| | 847 ⑨ | G237 | Fall-time torque bias terminal 1 bias | 0 to 400%, 9999 | 1% | 9999 | | 5-110 | |
| | 848 ⑨ | G238 | Fall-time torque bias terminal 1 gain | 0 to 400%, 9999 | 1% | 9999 | | 5-110 | |
| Additional function | 849 | T007 | Analog input offset adjustment | 0 to 200% | 0.1% | 100% | | 5-386 | |
| | 850 | G103 | Brake operation selection | 0 to 2 | 1 | 0 | | 5-640 | |
| | 853 ⑨ | H417 | Speed deviation time | 0 to 100 s | 0.1 s | 1 s | | 5-115 | |
| | 854 | G217 | Excitation ratio | 0 to 100% | 1% | 100% | | 5-181 | |
| | 858 | T040 | Terminal 4 function assignment | 0, 1, 4, 9999 | 1 | 0 | | 5-83, 5-304, 5-381 | |
| | 859 | C126 | Torque current/Rated PM motor current | 0 to 500 A, 9999 ② | 0.01 A ② | 9999 | | 5-66, 5-440 | |
| | | | | 0 to 3600 A, 9999 ③ | 0.1 A ③ | | | | |
| | 860 | C226 | Second motor torque current/Rated PM motor current | 0 to 500 A, 9999 ② | 0.01 A ② | 9999 | | 5-66, 5-440 | |
| | | | | 0 to 3600 A, 9999 ③ | 0.1 A ③ | | | | |
| | 864 | M470 | Torque detection | 0 to 400% | 0.1% | 150% | | 5-367 | |
| | 865 | M446 | Low speed detection | 0 to 590 Hz | 0.01 Hz | 1.5 Hz | | 5-361 | |
| Indication function | 866 | M042 | Torque monitoring reference | 0 to 400% | 0.1% | 150% | | 5-330 | |
| — | 867 | M321 | AM output filter | 0 to 5 s | 0.01 s | 0.01 s | | 5-337 | |
| — | 868 | T010 | Terminal 1 function assignment | 0 to 6, 9999 | 1 | 0 | | 5-83, 5-304, 5-381 | |
| — | 869 | M334 | Current output filter | 0 to 5 s | 0.01 s | — | 0.02 s | 5-337 | |
| — | 870 | M440 | Speed detection hysteresis | 0 to 5 Hz | 0.01 Hz | 0 Hz | | 5-361 | |
| Protective Functions | 872 ⑮ | H201 | Input phase loss protection selection | 0, 1 | 1 | 0 | | 5-296 | |
| | 873 ⑨ | H415 | Speed limit | 0 to 400 Hz | 0.01 Hz | 20 Hz | | 5-115 | |
| | 874 | H730 | OLT level setting | 0 to 400% | 0.1% | 150% | | 5-83 | |
| | 875 | H030 | Fault definition | 0, 1 | 1 | 0 | | 5-292 | |

***Tab. 5-2:*** *Parameter overview (by number) (21)*

| Function | Pr. | Pr. group | Name | Setting range | Minimum setting increments | Initial value FM | Initial value CA | Refer to page | Customer setting |
|---|---|---|---|---|---|---|---|---|---|
| Control system functions | 877 | G220 | Speed feed forward control/model adaptive speed control selection | 0, 1, 2 | 1 | 0 | | 5-106<br>5-175 | |
| | 878 | G221 | Speed feed forward filter | 0 to 1 s | 0.01 s | 0 s | | 5-106 | |
| | 879 | G222 | Speed feed forward torque limit | 0 to 400% | 0.1% | 150% | | 5-106 | |
| | 880 | C114 | Load inertia ratio | 0 to 200 times | 0.1 | 7 | | 5-66, 5-106 | |
| | 881 | G223 | Speed feed forward gain | 0 to 1000% | 1% | 0% | | 5-106 | |
| Regeneration avoidance function | 882 | G120 | Regeneration avoidance operation selection | 0 to 2 | 1 | 0 | | 5-662 | |
| | 883 | G121 | Regeneration avoidance operation level | 300 to 800 V | 0.1V | DC 380 V ⑦<br>DC 760 V ⑧ | | 5-662 | |
| | 884 | G122 | Regeneration avoidance at deceleration detection sensitivity | 0 to 5 | 1 | 0 | | 5-662 | |
| | 885 | G123 | Regeneration avoidance compensation frequency limit value | 0 to 590 Hz, 9999 | 0.01 Hz | 6 Hz | | 5-662 | |
| | 886 | G124 | Regeneration avoidance voltage gain | 0 to 200% | 0.1% | 100% | | 5-662 | |
| Free parameters | 888 | E420 | Free parameter 1 | 0 to 9999 | 1 | 9999 | | 5-203 | |
| | 889 | E421 | Free parameter 2 | 0 to 9999 | 1 | 9999 | | 5-203 | |
| Energy saving monitor | 891 | M023 | Cumulative power monitor digit shifted times | 0 to 4, 9999 | 1 | 9999 | | 5-317, 5-343 | |
| | 892 | M200 | Load factor | 30 to 150% | 0.1% | 100% | | 5-343 | |
| | 893 | M201 | Energy saving monitor reference (motor capacity) | 0.1 to 55 kW ②<br>0 to 3600 kW ③ | 0.01 kW ②<br>0.1 kW ③ | Rated inverter capacity | | 5-343 | |
| | 894 | M202 | Control selection during commercial power-supply operation | 0, 1, 2, 3 | 1 | 0 | | 5-343 | |
| | 895 | M203 | Power saving rate reference value | 0, 1, 9999 | 1 | 9999 | | 5-343 | |
| | 896 | M204 | Power unit cost | 0 to 500, 9999 | 0.01 | 9999 | | 5-343 | |
| | 897 | M205 | Power saving monitor average time | 0,1 to 1000 h, 9999 | 1 h | 9999 | | 5-343 | |
| | 898 | M206 | Power saving cumulative monitor clear | 0, 1, 10, 9999 | 1 | 9999 | | 5-343 | |
| | 899 | M207 | Operation time rate (estimated value) | 0 to 100%, 9999 | 0.1% | 9999 | | 5-343 | |

***Tab. 5-2:*** *Parameter overview (by number) (22)*

| Function | Pr. | Pr. group | Name | Setting range | Minimum setting increments | Initial value | | Refer to page | Customer setting |
|---|---|---|---|---|---|---|---|---|---|
| | | | | | | FM | CA | | |
| Calibration parameters | C0 (900) ⑩ | M310 | FM/CA terminal calibration | — | — | — | | 5-337 | |
| | C1 (901) ⑩ | M320 | AM terminal calibration | — | — | — | | 5-337 | |
| | C2 (902) ⑩ | T200 | Terminal 2 frequency setting bias frequency | 0 to 590 Hz | 0.01 Hz | 0 Hz | | 5-388 | |
| | C3 (902) ⑩ | T201 | Terminal 2 frequency setting bias | 0 to 300% | 0.1% | 0% | | 5-388 | |
| | 125 (903) ⑩ | T202 | Terminal 2 frequency setting gain frequency | 0 to 590 Hz | 0.01 Hz | 60 Hz | 50 Hz | 5-388 | |
| | C4 (903) ⑩ | T203 | Terminal 2 frequency setting gain | 0 to 300% | 0.1% | 100% | | 5-388 | |
| | C5 (904) ⑩ | T400 | Terminal 4 frequency setting bias frequency | 0 to 590 Hz | 0.01 Hz | 0 Hz | | 5-388 | |
| | C6 (904) ⑩ | T401 | Terminal 4 frequency setting bias | 0 to 300% | 0.1% | 20% | | 5-388 | |
| | 126 (905) ⑩ | T402 | Terminal 4 frequency setting gain frequency | 0 to 590 Hz | 0.01 Hz | 60 Hz | 50 Hz | 5-388 | |
| | C7 (905) ⑩ | T403 | Terminal 4 frequency setting gain | 0 to 300% | 0.1% | 100% | | 5-388 | |
| | C12 (917) ⑩ | T100 | Terminal 1 bias frequency (speed) | 0 to 590 Hz | 0.01 Hz | 0 Hz | | 5-388 | |
| | C13 (917) ⑩ | T101 | Terminal 1 bias (speed) | 0 to 300% | 0.1% | 0% | | 5-388 | |
| | C14 (918) ⑩ | T102 | Terminal 1 gain frequency (speed) | 0 to 590 Hz | 0.01 Hz | 60 Hz | 50 Hz | 5-388 | |
| | C15 (918) ⑩ | T103 | Terminal 1 gain (speed) | 0 to 300% | 0.1% | 100% | | 5-388 | |
| | C16 (919) ⑩ | T110 | Terminal 1 bias command (torque/ magnetic flux) | 0 to 400% | 0.1% | 0% | | 5-396 | |
| | C17 (919) ⑩ | T111 | Terminal 1 bias (torque/magnetic flux) | 0 to 300% | 0.1% | 0% | | 5-396 | |
| | C18 (920) ⑩ | T112 | Terminal 1 gain command (torque/ magnetic flux) | 0 to 400% | 0.1% | 150% | | 5-396 | |
| | C19 (920) ⑩ | T113 | Terminal 1 gain (torque/magnetic flux) | 0 to 300% | 0.1% | 100% | | 5-396 | |
| | C8 (930) ⑩ | M330 | Current output bias signal | 0 to 100% | 0.1% | – | 0% | 5-337 | |

***Tab. 5-2:*** *Parameter overview (by number) (23)*

| Function | Pr. | Pr. group | Name | Setting range | Minimum setting increments | Initial value FM | Initial value CA | Refer to page | Customer setting |
|---|---|---|---|---|---|---|---|---|---|
| Calibration parameters | C9 (930) ⑩ | M331 | Current output bias current | 0 to 100% | 0.1% | — | 0% | 5-337 | |
| | C10 (931) ⑩ | M332 | Current output gain signal | 0 to 100% | 0.1% | — | 100% | 5-337 | |
| | C11 (931) ⑩ | M333 | Current output gain current | 0 to 100% | 0.1% | — | 100% | 5-337 | |
| | C38 (932) ⑩ | T410 | Terminal 4 bias command (torque/ magnetic flux) | 0 to 400% | 0.1% | 0% | | 5-396 | |
| | C39 (932) ⑩ | T411 | Terminal 4 bias (torque/magnetic flux) | 0 to 300% | 0.1% | 20% | | 5-396 | |
| | C40 (933) ⑩ | T412 | Terminal 4 gain command (torque/ magnetic flux) | 0 to 400% | 0.1% | 150% | | 5-396 | |
| | C41 (933) ⑩ | T413 | Terminal 4 gain (torque/magnetic flux) | 0 to 300% | 0.1% | 100% | | 5-396 | |
| | C42 (934) ⑩ | A630 | PID display bias coefficient | 0 to 500, 9999 | 0.01 | 9999 | | 5-521 | |
| | C43 (934) ⑩ | A631 | PID display bias analog value | 0 to 300% | 0.1% | 20% | | 5-521 | |
| | C44 (935) ⑩ | A632 | PID display gain coefficient | 0 to 500, 9999 | 0.01 | 9999 | | 5-521 | |
| | C45 (935) ⑩ | A633 | PID display gain analog value | 0 to 300% | 0.1% | 100% | | 5-521 | |
| — | 977 | E302 | Input voltage mode selection | 0, 1 | 1 | 0 | | 5-195 | |
| — | 989 | E490 | Parameter copy alarm release | 10 ②<br>100 ③ | 1 | 10 ②<br>100 ③ | | 5-678 | |
| PU | 990 | E104 | PU buzzer control | 0, 1 | 1 | 1 | | 5-188 | |
| | 991 | E105 | PU contrast adjustment | 0 to 63 | 1 | 58 | | 5-188 | |
| Monitor function | 992 | M104 | Operation panel setting dial push monitor selection | 0 to 3, 5 to 14, 17 to 20, 22 to 35, 38, 40 to 45, 50 to 57, 61, 62, 64, 67, 87 to 98, 100 | 1 | 0 | | 5-317 | |
| Droop control | 994 | G403 | Droop break point gain | 0.1 to 100%, 9999 | 0.1% | 9999 | | 5-672 | |
| | 995 | G404 | Droop break point torque | 0.1 to 100% | 0.1% | 100% | | 5-672 | |
| — | 997 | H103 | Fault initiation | 0 to 255, 9999 | 1 | 9999 | | 5-70 | |
| — | 998 | E430 | PM parameter initialization Simple | 0, 3003, 3103, 8009, 8109, 9009, 9109 | 1 | 0 | | 5-69 | |
| — | 999 | E431 | Automatic parameter setting Simple | 1, 2, 10, 11, 12, 13, 20, 21, 9999 | 1 | 9999 | | 5-203 | |
| — | 1002 | C150 | Lq tuning target current adjustment coefficient | 50 to 150%, 9999 | 0.1% | 9999 | | 5-440 | |
| Additional function | 1003 | G601 | Notch filter frequency | 0, 8 to 1250 Hz | 1 Hz | 0 | | 5-118 | |
| | 1004 | G602 | Notch filter depth | 0 to 3 | 1 | 0 | | 5-118 | |
| | 1005 | G603 | Notch filter width | 0 to 3 | 1 | 0 | | 5-118 | |
| Clock function | 1006 | E020 | Clock (year) | 2000 to 2099 | 1 | 2000 | | 5-183 | |
| | 1007 | E021 | Clock (month, day) | 1/1 to 12/31 | 1 | 101 | | 5-183 | |
| | 1008 | E022 | Clock (hour, minute) | 0:00 to 23:59 | 1 | 0 | | 5-183 | |

***Tab. 5-2:*** *Parameter overview (by number) (24)*

| Function | Pr. | Pr. group | Name | Setting range | Minimum setting increments | Initial value FM | Initial value CA | Refer to page | Customer setting |
|---|---|---|---|---|---|---|---|---|---|
| Clock function | 1020 | A900 | Trace operation selection | 0 to 4 | 1 | 0 | | 5-568 | |
| | 1021 | A901 | Trace mode selection | 0 to 2 | 1 | 0 | | 5-568 | |
| | 1022 | A902 | Sampling cycle | 0 to 9 | 1 | 2 | | 5-568 | |
| | 1023 | A903 | Number of analog channels | 1 to 8 | 1 | 4 | | 5-568 | |
| | 1024 | A904 | Sampling auto start | 0, 1 | 1 | 0 | | 5-568 | |
| | 1025 | A905 | Trigger mode selection | 0 to 4 | 1 | 0 | | 5-568 | |
| | 1026 | A906 | Number of sampling before trigger | 0 to 100% | 1% | 90% | | 5-568 | |
| | 1027 | A910 | Analog source selection (1ch) | 1 to 3, 5 to 14, 17 to 20, 22 to 24, 32 to 35, 40 to 42, 52 to 54, 61, 62, 64, 67, 87 to 98, 201 to 213, 222 to 227, 230 to 232, 235 to 238 | 1 | 201 | | 5-568 | |
| | 1028 | A911 | Analog source selection (2ch) | | | 202 | | 5-568 | |
| | 1029 | A912 | Analog source selection (3ch) | | | 203 | | 5-568 | |
| | 1030 | A913 | Analog source selection (4ch) | | | 204 | | 5-568 | |
| | 1031 | A914 | Analog source selection (5ch) | | | 205 | | 5-568 | |
| | 1032 | A915 | Analog source selection (6ch) | | | 206 | | 5-568 | |
| | 1033 | A916 | Analog source selection (7ch) | | | 207 | | 5-568 | |
| | 1034 | A917 | Analog source selection (8ch) | | | 208 | | 5-568 | |
| | 1035 | A918 | Analog trigger channel | 1 to 8 | 1 | 1 | | 5-568 | |
| | 1036 | A919 | Analog trigger operation selection | 0, 1 | 1 | 0 | | 5-568 | |
| | 1037 | A920 | Analog trigger level | 600 to 1400 | 1 | 1000 | | 5-568 | |
| | 1038 | A930 | Digital source selection (1ch) | 1 to 255 | 1 | 1 | | 5-568 | |
| | 1039 | A931 | Digital source selection (2ch) | | | 2 | | 5-568 | |
| | 1040 | A932 | Digital source selection (3ch) | | | 3 | | 5-568 | |
| | 1041 | A933 | Digital source selection (4ch) | | | 4 | | 5-568 | |
| | 1042 | A934 | Digital source selection (5ch) | | | 5 | | 5-568 | |
| | 1043 | A935 | Digital source selection (6ch) | | | 6 | | 5-568 | |
| | 1044 | A936 | Digital source selection (7ch) | | | 7 | | 5-568 | |
| | 1045 | A937 | Digital source selection (8ch) | | | 8 | | 5-568 | |
| | 1046 | A938 | Digital trigger channel | 1 to 8 | 1 | 1 | | 5-568 | |
| | 1047 | A939 | Digital trigger operation selection | 0, 1 | 1 | 0 | | 5-568 | |
| — | 1048 | E106 | Display-off waiting time | 0 to 60 min | 1 min | 0 | | 5-189 | |
| — | 1049 | E110 | USB host reset | 0, 1 | 1 | 0 | | 6-16 | |

***Tab. 5-2:*** *Parameter overview (by number) (25)*

| Function | Pr. | Pr. group | Name | Setting range | Minimum setting increments | Initial value FM | Initial value CA | Refer to page | Customer setting |
|---|---|---|---|---|---|---|---|---|---|
| Swinging suppression control | 1072 | A310 | DC brake judgment time for swinging suppression control operation | 0 to 10 s | 0.1 s | 3 s | | 5-484 | |
| | 1073 | A311 | Swinging suppression control operation selection | 0, 1 | 1 | 0 | | 5-484 | |
| | 1074 | A312 | Swinging suppression frequency | 0.05 to 3 Hz, 9999 | 0.001 Hz | 1 Hz | | 5-484 | |
| | 1075 | A313 | Swinging suppression depth | 0 to 3 | 1 | 0 | | 5-484 | |
| | 1076 | A314 | Swinging suppression width | 0 to 3 | 1 | 0 | | 5-484 | |
| | 1077 | A315 | Rope length | 0.1 to 50 m | 0.1 m | 1 m | | 5-484 | |
| | 1078 | A316 | Trolley weight | 1 to 50000 kg | 1 kg | 1 kg | | 5-484 | |
| | 1079 | A317 | Load weight | 1 to 50000 kg | 1 kg | 1 kg | | 5-484 | |
| — | 1103 | F040 | Deceleration time at emergency stop | 0 to 3600 s | 0.1 s | 5 s | | 5-225 | |
| Monitor function | 1106 | M050 | Torque monitor filter | 0 to 5 s, 9999 | 0.01 s | 9999 | | 5-317 | |
| | 1107 | M051 | Running speed monitor filter | 0 to 5 s, 9999 | 0.01 s | 9999 | | 5-317 | |
| | 1108 | M052 | Excitation current monitor filter | 0 to 5 s, 9999 | 0.01 s | 9999 | | 5-317 | |
| — | 1113 | H414 | Speed limit method selection | 0 to 2, 10, 9999 | 1 | 0 | | 5-133 | |
| — | 1114 | D403 | Torque command reverse selection | 0, 1 | 1 | 1 | | 5-129 | |
| — | 1115 | G218 | Speed control integral term clear time | 0 to 9998 ms | 1 ms | 0 s | | 5-94 | |
| — | 1116 | G206 | Constant output range speed control P gain compensation | 0 to 100% | 0.1% | 0% | | 5-94 | |
| — | 1117 | G261 | Speed control P gain 1 (per-unit system) | 0 to 300, 9999 | 0.01 | 9999 | | 5-94 | |
| — | 1118 | G361 | Speed control P gain 2 (per-unit system) | 0 to 300, 9999 | 0.01 | 9999 | | 5-94 | |
| — | 1119 | G262 | Model speed control gain (per-unit system) | 0 to 300, 9999 | 0.01 | 9999 | | 5-106 | |
| — | 1121 | G260 | Per-unit speed control reference frequency | 0 to 400 Hz | 0.01 Hz | 120 Hz ② | | 5-94 | |
| | | | | | | 60 Hz ③ | | | |

***Tab. 5-2:*** *Parameter overview (by number) (26)*

| Function | Pr. | Pr. group | Name | Setting range | Minimum setting increments | Initial value FM | Initial value CA | Refer to page | Customer setting |
|---|---|---|---|---|---|---|---|---|---|
| PID control | 1134 | A605 | PID upper limit manipulated value | 0 to 100% | 0.1% | 100% | | 5-530 | |
| | 1135 | A606 | PID lower limit manipulated value | 0 to 100% | 0.1% | 100% | | 5-530 | |
| | 1136 | A670 | Second PID display bias coefficient | 0 to 500, 9999 | 0.01 | 9999 | | 5-521 | |
| | 1137 | A671 | Second PID display bias analog value | 0 to 300% | 0.1% | 20% | | 5-521 | |
| | 1138 | A672 | Second PID display gain coefficient | 0 to 500, 9999 | 0.01 | 9999 | | 5-521 | |
| | 1139 | A673 | Second PID display gain analog value | 0 to 300% | 0.1% | 100% | | 5-521 | |
| | 1140 | A664 | Second PID set point/deviation input selection | 1 to 5 | 1 | 2 | | 5-504 | |
| | 1141 | A665 | Second PID measured value input selection | 1 to 5 | 1 | 3 | | 5-504 | |
| | 1142 | A640 | Second PID unit selection | 0 to 43, 9999 | 1 | 9999 | | 5-504 | |
| | 1143 | A641 | Second PID upper limit | 0 to 100%, 9999 | 0.1% | 9999 | | 5-504 | |
| | 1144 | A642 | Second PID lower limit | 0 to 100%, 9999 | 0.1% | 9999 | | 5-504 | |
| | 1145 | A643 | Second PID deviation limit | 0 to 100%, 9999 | 0.1% | 9999 | | 5-504 | |
| | 1146 | A644 | Second PID signal operation selection | 0 to 3, 10 to 13 | 1 | 0 | | 5-504 | |
| | 1147 | A661 | Second output interruption detection time | 0 to 3600 s, 9999 | 0.1 s | 1 | | 5-504 | |
| | 1148 | A662 | Second output interruption detection level | 0 to 590 Hz | 0.01 Hz | 0 Hz | | 5-504 | |
| | 1149 | A663 | Second output interruption cancel level | 900 to 1100% | 0.1% | 1000% | | 5-504 | |
| PLC function | 1150 to 1199 | A810 to A859 | PLC function user parameters 1 to 50 | 0 to 65535 | 1 | 0 | | 5-564 | |
| — | 1220 | B100 | Target position/speed selection | 0 to 2 | 1 | 0 | | A-39 | |
| Simple position control | 1221 | B101 | Start command edge detection selection | 0, 1 | 1 | 0 | | 5-151 | |
| | 1222 | B120 | First positioning acceleration time | 0.01 to 360 s | 0.01 s | 5 s | | 5-151 | |
| | 1223 | B121 | First positioning deceleration time | 0.01 to 360 s | 0.01 s | 5 s | | 5-151 | |
| | 1224 | B122 | First positioning dwell time | 0 to 20000 ms | 1 ms | 0 ms | | 5-151 | |
| | 1225 | B123 | First positioning sub-function | 0, 1, 10, 11, 100, 101, 110, 111 | 1 | 10 | | 5-151 | |
| | 1226 | B124 | Second positioning acceleration time | 0.01 to 360 s | 0.01 s | 5 s | | 5-151 | |
| | 1227 | B125 | Second positioning deceleration time | 0.01 to 360 s | 0.01 s | 5 s | | 5-151 | |
| | 1228 | B126 | Second positioning dwell time | 0 to 20000 ms | 1 ms | 0 ms | | 5-151 | |
| | 1229 | B127 | Second positioning sub-function | 0, 1, 10, 11, 100, 101, 110, 111 | 1 | 10 | | 5-151 | |
| | 1230 | B128 | Third positioning acceleration time | 0.01 to 360 s | 0.01 s | 5 s | | 5-151 | |
| | 1231 | B129 | Third positioning deceleration time | 0.01 to 360 s | 0.01 s | 5 s | | 5-151 | |
| | 1232 | B130 | Third positioning dwell time | 0 to 20000 ms | 1 ms | 0 ms | | 5-151 | |
| | 1233 | B131 | Third positioning sub-function | 0, 1, 10, 11, 100, 101, 110, 111 | 1 | 10 | | 5-151 | |
| | 1234 | B132 | Fourth positioning acceleration time | 0.01 to 360 s | 0.01 s | 5 s | | 5-151 | |

***Tab. 5-2:*** *Parameter overview (by number) (27)*

| Function | Pr. | Pr. group | Name | Setting range | Minimum setting increments | Initial value FM | Initial value CA | Refer to page | Customer setting |
|---|---|---|---|---|---|---|---|---|---|
| Simple position control | 1235 | B133 | Fourth positioning deceleration time | 0.01 to 360 s | 0.01 s | 5 s | | 5-151 | |
| | 1236 | B134 | Fourth positioning dwell time | 0 to 20000 ms | 1 ms | 0 ms | | 5-151 | |
| | 1237 | B135 | Fourth positioning sub-function | 0, 1, 10, 11, 100, 101, 110, 111 | 1 | 10 | | 5-151 | |
| | 1238 | B136 | Fifth positioning acceleration time | 0.01 to 360 s | 0.01 s | 5 s | | 5-151 | |
| | 1239 | B137 | Fifth positioning deceleration time | 0.01 to 360 s | 0.01 s | 5 s | | 5-151 | |
| | 1240 | B138 | Fifth positioning dwell time | 0 to 20000 ms | 1 ms | 0 ms | | 5-151 | |
| | 1241 | B139 | Fifth positioning sub-function | 0, 1, 10, 11, 100, 101, 110, 111 | 1 | 10 | | 5-151 | |
| | 1242 | B140 | Sixth positioning acceleration time | 0.01 to 360 s | 0.01 s | 5 s | | 5-151 | |
| | 1243 | B141 | Sixth positioning deceleration time | 0.01 to 360 s | 0.01 s | 5 s | | 5-151 | |
| | 1244 | B142 | Sixth positioning dwell time | 0 to 20000 ms | 1 ms | 0 ms | | 5-151 | |
| | 1245 | B143 | Sixth positioning sub-function | 0, 1, 10, 11, 100, 101, 110, 111 | 1 | 10 | | 5-151 | |
| | 1246 | B144 | Seventh positioning acceleration time | 0.01 to 360 s | 0.01 s | 5 s | | 5-151 | |
| | 1247 | B145 | Seventh positioning deceleration time | 0.01 to 360 s | 0.01 s | 5 s | | 5-151 | |
| | 1248 | B146 | Seventh positioning dwell time | 0 to 20000 ms | 1 ms | 0 ms | | 5-151 | |
| | 1249 | B147 | Seventh positioning sub-function | 0, 1, 10, 11, 100, 101, 110, 111 | 1 | 10 | | 5-151 | |
| | 1250 | B148 | Eighth positioning acceleration time | 0.01 to 360 s | 0.01 s | 5 s | | 5-151 | |
| | 1251 | B149 | Eighth positioning deceleration time | 0.01 to 360 s | 0.01 s | 5 s | | 5-151 | |
| | 1252 | B150 | Eighth positioning dwell time | 0 to 20000 ms | 1 ms | 0 ms | | 5-151 | |
| | 1253 | B151 | Eighth positioning sub-function | 0, 1, 10, 11, 100, 101, 110, 111 | 1 | 10 | | 5-151 | |
| | 1254 | B152 | Ninth positioning acceleration time | 0.01 to 360 s | 0.01 s | 5 s | | 5-151 | |
| | 1255 | B153 | Ninth positioning deceleration time | 0.01 to 360 s | 0.01 s | 5 s | | 5-151 | |
| | 1256 | B154 | Ninth positioning dwell time | 0 to 20000 ms | 1 ms | 0 ms | | 5-151 | |
| | 1257 | B155 | Ninth positioning sub-function | 0, 1, 10, 11, 100, 101, 110, 111 | 1 | 10 | | 5-151 | |
| | 1258 | B156 | Tenth positioning acceleration time | 0.01 to 360 s | 0.01 s | 5 s | | 5-151 | |
| | 1259 | B157 | Tenth positioning deceleration time | 0.01 to 360 s | 0.01 s | 5 s | | 5-151 | |
| | 1260 | B158 | Tenth positioning dwell time | 0 to 20000 ms | 1 ms | 0 ms | | 5-151 | |
| | 1261 | B159 | Tenth positioning sub-function | 0, 1, 10, 11, 100, 101, 110, 111 | 1 | 10 | | 5-151 | |
| | 1262 | B160 | Eleventh positioning acceleration time | 0.01 to 360 s | 0.01 s | 5 s | | 5-151 | |

***Tab. 5-2:*** *Parameter overview (by number) (28)*

| Function | Pr. | Pr. group | Name | Setting range | Minimum setting increments | Initial value FM | Initial value CA | Refer to page | Customer setting |
|---|---|---|---|---|---|---|---|---|---|
| Simple position control | 1263 | B161 | Eleventh positioning deceleration time | 0.01 to 360 s | 0.01 s | 5 s | | 5-151 | |
| | 1264 | B162 | Eleventh positioning dwell time | 0 to 20000 ms | 1 ms | 0 ms | | 5-151 | |
| | 1265 | B163 | Eleventh positioning sub-function | 0, 1, 10, 11, 100, 101, 110, 111 | 1 | 10 | | 5-151 | |
| | 1266 | B164 | Twelfth positioning acceleration time | 0.01 to 360 s | 0.01 s | 5 s | | 5-151 | |
| | 1267 | B165 | Twelfth positioning deceleration time | 0.01 to 360 s | 0.01 s | 5 s | | 5-151 | |
| | 1268 | B166 | Twelfth positioning dwell time | 0 to 20000 ms | 1 ms | 0 ms | | 5-151 | |
| | 1269 | B167 | Twelfth positioning sub-function | 0, 1, 10, 11, 100, 101, 110, 111 | 1 | 10 | | 5-151 | |
| | 1270 | B168 | Thirteenth positioning acceleration time | 0.01 to 360 s | 0.01 s | 5 s | | 5-151 | |
| | 1271 | B169 | Thirteenth positioning deceleration time | 0.01 to 360 s | 0.01 s | 5 s | | 5-151 | |
| | 1272 | B170 | Thirteenth positioning dwell time | 0 to 20000 ms | 1 ms | 0 ms | | 5-151 | |
| | 1273 | B171 | Thirteenth positioning sub-function | 0, 1, 10, 11, 100, 101, 110, 111 | 1 | 10 | | 5-151 | |
| | 1274 | B172 | Fourteenth positioning acceleration time | 0.01 to 360 s | 0.01 s | 5 s | | 5-151 | |
| | 1275 | B173 | Fourteenth positioning deceleration time | 0.01 to 360 s | 0.01 s | 5 s | | 5-151 | |
| | 1276 | B174 | Fourteenth positioning dwell time | 0 to 20000 ms | 1 ms | 0 ms | | 5-151 | |
| | 1277 | B175 | Fourteenth positioning sub-function | 0, 1, 10, 11, 100, 101, 110, 111 | 1 | 10 | | 5-151 | |
| | 1278 | B176 | Fifteenth positioning acceleration time | 0.01 to 360 s | 0.01 s | 5 s | | 5-151 | |
| | 1279 | B177 | Fifteenth positioning deceleration time | 0.01 to 360 s | 0.01 s | 5 s | | 5-151 | |
| | 1280 | B178 | Fifteenth positioning dwell time | 0 to 20000 ms | 1 ms | 0 ms | | 5-151 | |
| | 1281 | B179 | Fifteenth positioning sub-function | 0, 10, 100, 110 | 1 | 10 | | 5-151 | |
| | 1282 | B180 | Home position return method selection | 0 to 6 | 1 | 4 | | 5-151 | |
| | 1283 | B181 | Home position return speed | 0 to 30 Hz | 0.01 Hz | 2 Hz | | 5-151 | |
| | 1284 | B182 | Home position return creep speed | 0 to 10 Hz | 0.01 Hz | 0.5 Hz | | 5-151 | |
| | 1285 | B183 | Home position shift amount lower 4 digits | 0 to 9999 | 1 | 0 | | 5-151 | |
| | 1286 | B184 | Home position shift amount upper 4 digits | 0 to 9999 | 1 | 0 | | 5-151 | |
| | 1287 | B185 | Travel distance after proximity dog ON lower 4 digits | 0 to 9999 | 1 | 2048 | | 5-151 | |
| | 1288 | B186 | Travel distance after proximity dog ON upper 4 digits | 0 to 9999 | 1 | 0 | | 5-151 | |
| | 1289 | B187 | Home position return stopper torque | 0 to 200% | 0.1% | 40% | | 5-151 | |
| | 1290 | B188 | Home position return stopper waiting time | 0 to 10 s | 0.1 s | 0.5 s | | 5-151 | |

***Tab. 5-2:*** *Parameter overview (by number) (29)*

| Function | Pr. | Pr. group | Name | Setting range | Minimum setting increments | Initial value FM | Initial value CA | Refer to page | Customer setting |
|---|---|---|---|---|---|---|---|---|---|
| Simple position control | 1292 | B190 | Position control terminal input selection | 0, 1 | 1 | 0 | | 5-151 | |
| | 1293 | B191 | Roll feeding mode selection | 0, 1 | 1 | 0 | | 5-151 | |
| | 1294 | B192 | Position detection lower 4 digits | 0 to 9999 | 1 | 0 | | 5-173 | |
| | 1295 | B193 | Position detection upper 4 digits | 0 to 9999 | 1 | 0 | | 5-173 | |
| | 1296 | B194 | Position detection selection | 0 to 2 | 1 | 0 | | 5-173 | |
| | 1297 | B195 | Position detection hysteresis width | 0 to 32767 | 1 | 0 | | 5-173 | |
| — | 1300 to 1343, 1350 to 1359 | N500 to N543, N550 to N559 | Communication option parameters. For details, refer to the Instruction Manual of the option. | | | | | | |
| Clear parameters | Pr.CLR | | Parameter clear | (0), 1 | 1 | 0 | | 5-676 | |
| | ALL.CL | | All parameter clear | (0), 1 | 1 | 0 | | 5-676 | |
| | Err.CL | | Fault history clear | (0), 1 | 1 | 0 | | 6-3 | |
| — | Pr.CPY | | Parameter copy | (0), 1 to 3 | 1 | 0 | | 5-677 | |
| — | Pr.CHG | | Initial value change list | — | 1 | 0 | | 5-684 | |
| — | IPM | | IPM initialization | 0, 3003 | 1 | 0 | | 5-69 | |
| — | AUTO | | Automatic parameter setting | — | — | — | | 5-203 | |
| — | Pr.MD | | Group parameter setting | (0), 1, 2 | 1 | 0 | | 5-32 | |

***Tab. 5-2:*** *Parameter overview (by number) (30)*

① Differ according to capacities.
6%: FR-A820-00077(0.75K) or lower, FR-A840-00038(0.75K) or lower
4%: FR-A820-00105(1.5K) to FR-A820-00250(3.7K), FR-A840-00052(1.5K) to FR-A840-00126(3.7K)
3%: FR-A820-00340(5.5K), FR-A820-00490(7.5K), FR-A840-00170(5.5K), FR-A840-00250(7.5K)
2%: FR-A820-00630(11K) to FR-A820-03160(55K), FR-A840-00310(11K) to FR-A840-01800(55K)
1%: FR-A820-03800(75K) or higher, FR-A840-02160(75K) or higher

② The setting range or initial value for the FR-A820-03160(55K) or lower and FR-A840-01800(55K) or lower.

③ The setting range or initial value for the FR-A820-03800(75K) or higher and FR-A840-02160(75K) or higher.

④ The initial value for the FR-A820-00490(7.5K) or lower and FR-A840-00250(7.5K) or lower.

⑤ The initial value for the FR-A820-00630(11K) or higher and FR-A840-00310(11K) or higher.

⑥ Differ according to capacities.
4%: FR-A820-00490(7.5K) or lower, FR-A840-00250(7.5K) or lower
2%: FR-A820-00630(11K) to FR-A820-03160(55K), FR-A840-00310(11K) to FR-A840-01800(55K)
1%: FR-A820-03800(75K) or higher, FR-A840-02160(75K) or higher

⑦ The value for the 200 V class.

⑧ The value for the 400 V class.

⑨ Setting can be made only when the FR-A8AP is mounted.

⑩ The parameter number in parentheses is the one for use with the parameter unit (FR-PU07).

⑪ The setting range or initial value for the standard model.

⑫ The setting range or initial value for the separated converter type.

⑬ The setting range or initial value for the IP55 compatible model.

⑭ The setting is available for the standard model only.

⑮ The setting is available only for standard models and IP55 compatible models.

## 5.1.2 Group parameter display

Parameter numbers can be changed to grouped parameter numbers. Parameters are grouped by their functions. The related parameters can be set easily.

### Changing to the grouped parameter numbers

| Pr.MD setting value | Description |
|---|---|
| 0 | Default parameter display method |
| 1 | Parameter display by parameter number |
| 2 | Parameter display by function group |

***Tab. 5-3:*** *Changing to the grouped parameter numbers*

| Operation |
|---|
| ① Screen at power-ON<br>The monitor display appears. |
| ② Parameter setting mode<br>Press MODE to choose the parameter setting mode. (The parameter number read previously appears.) |
| ③ Selecting the parameter number<br>Turn until Pr.Md (parameter display method) appears.<br>Press SET . "0" (initial value) appears. |
| ④ Changing to the group parameter display<br>Turn to change the set value to "2" (group parameter display). Press SET to select the group parameter setting. "2" and "Pr.Md" flicker alternately after the setting is completed. |

***Tab. 5-4:*** *Display parameters grouped by function*

### Changing parameter settings in the group parameter display

**Example ▽**

Changing example:
Change the P.H400 (Pr. 1) "Maximum frequency".

| Operation |
|---|
| ① Screen at power-ON<br>The monitor display appears. |
| ② Changing the operation mode<br>Press [PU/EXT] to choose the PU operation mode. [PU] indicator is lit. |
| ③ Parameter setting mode<br>Press [MODE] to choose the parameter setting mode. (The parameter number read previously appears.) |
| ④ Parameter group selection<br>Press [ESC] several times until PH□ appears. Parameter groups can now be selected. |
| ⑤ Parameter group selection<br>Turn ⊛ until PH4 (protective function parameter 4) appears. Press [SET] to display PH4-- -- and make the group parameters of the protective function parameter 4 selectable. |
| ⑥ Parameter selection<br>Turn ⊛ until PH400 (P.H400 "Maximum frequency") appears. Press [SET] to read the present set value.<br>" 120.00 " (initial value) appears. |
| ⑦ Changing the setting value<br>Turn ⊛ to change the set value to " 60.00 ". Press [SET] to enter the setting. " 60.00 " and " PH400 " flicker alternately after the setting is completed. |

***Tab. 5-5:*** *Changing the parameter setting*

## 5.1.3 Parameter list (by function group)

### (E) Environment setting parameters

Parameters that set the inverter operation characteristics.

| Pr. group | Pr. | Name | Refer to page |
|---|---|---|---|
| E000 | 168 | Parameter for manufacturer setting. Do not set. | |
| E001 | 169 | Parameter for manufacturer setting. Do not set. | |
| E020 | 1006 | Clock (year) | 5-183 |
| E021 | 1007 | Clock (month, day) | 5-183 |
| E022 | 1008 | Clock (hour, minute) | 5-183 |
| E023 | 269 | Parameter for manufacturer setting. Do not set. | |
| E080 | 168 | Parameter for manufacturer setting. Do not set. | |
| E081 | 169 | Parameter for manufacturer setting. Do not set. | |
| E100 | 75 | Reset selection | 5-184 |
| E101 | 75 | Disconnected PU detection | 5-184 |
| E102 | 75 | PU stop selection | 5-184 |
| E103 | 145 | PU display language selection | 5-188 |
| E104 | 990 | PU buzzer control | 5-188 |
| E105 | 991 | PU contrast adjustment | 5-188 |
| E106 | 1048 | Display-off waiting time | 5-189 |
| E107 | 75 | Reset limit | 5-184 |
| E110 | 1049 | USB host reset | 6-16 |
| E200 | 161 | Frequency setting/key lock operation selection | 5-190 |
| E201 | 295 | Frequency change increment amount setting | 5-192 |
| E300 | 30 | Regenerative function selection | 5-652 |
| E301 | 570 | Multiple rating setting | 5-193 |
| E302 | 977 | Input voltage mode selection | 5-195 |
| E400 | 77 | Parameter write selection | 5-195 |
| E410 | 296 | Password lock level | 5-199 |
| E411 | 297 | Password lock/unlock | 5-199 |
| E420 | 888 | Free parameter 1 | 5-203 |
| E421 | 889 | Free parameter 2 | 5-203 |
| E430 | 998 | PM parameter initialization Simple | 5-69 |
| E431 | 999 | Automatic parameter setting Simple | 5-203 |
| E440 | 160 | User group read selection Simple | 5-208 |
| E441 | 172 | User group registered display/batch clear | 5-208 |
| E442 | 173 | User group registration | 5-208 |
| E443 | 174 | User group clear | 5-208 |
| E490 | 989 | Parameter copy alarm release | 5-678 |
| E600 | 72 | PWM frequency selection | 5-211 |
| E601 | 240 | Soft-PWM operation selection | 5-211 |

***Tab. 5-6:*** *Environment setting parameters (1)*

| Pr. group | Pr. | Name | Refer to page |
|---|---|---|---|
| E602 | 260 | PWM frequency automatic switchover | 5-211 |
| E700 | 255 | Life alarm status display | 5-214 |
| E701 ④ | 256 | Inrush current limit circuit life display | 5-214 |
| E702 | 257 | Control circuit capacitor life display | 5-214 |
| E703 ④ | 258 | Main circuit capacitor life display | 5-214 |
| E704 ④ | 259 | Main circuit capacitor life measuring | 5-214 |
| E710 | 503 | Maintenance timer 1 | 5-219 |
| E711 | 504 | Maintenance timer 1 warning output set time | 5-219 |
| E712 | 686 | Maintenance timer 2 | 5-219 |
| E713 | 687 | Maintenance timer 2 warning output set time | 5-219 |
| E714 | 688 | Maintenance timer 3 | 5-219 |
| E715 | 689 | Maintenance timer 3 warning output set time | 5-219 |
| E720 | 555 | Current average time | 5-221 |
| E721 | 556 | Data output mask time | 5-221 |
| E722 | 557 | Current average value monitor signal output reference current | 5-221 |

***Tab. 5-6:*** *Environment setting parameters (2)*

### (F) Setting of acceleration/deceleration time and acceleration/deceleration pattern

Parameters that set the motor acceleration/deceleration characteristics.

| Pr. group | Pr. | Name | Refer to page |
|---|---|---|---|
| F000 | 20 | Acceleration/deceleration reference frequency | 5-225 |
| F001 | 21 | Acceleration/deceleration time increments | 5-225 |
| F002 | 16 | Jog acceleration/deceleration time | 5-278 |
| F003 | 611 | Acceleration time at a restart | 5-540, 5-549 |
| F010 | 7 | Acceleration time Simple | 5-225 |
| F011 | 8 | Deceleration time Simple | 5-225 |
| F020 | 44 | Second acceleration/deceleration time | 5-225, 5-530 |
| F021 | 45 | Second deceleration time | 5-225, 5-530 |

***Tab. 5-7:*** *Setting of acceleration/deceleration time and acceleration/deceleration pattern (1)*

| Pr. group | Pr. | Name | Refer to page |
|---|---|---|---|
| F022 | 147 | Acceleration/deceleration time switching frequency | 5-225 |
| F030 | 110 | Third acceleration/deceleration time | 5-225 |
| F031 | 111 | Third deceleration time | 5-225 |
| F040 | 1103 | Deceleration time at emergency stop | 5-225 |
| F070 | 791 | Acceleration time in low-speed range | 5-225 |
| F071 | 792 | Deceleration time in low-speed range | 5-225 |
| F100 | 29 | Acceleration/deceleration pattern selection | 5-232 |
| F101 | 59 | Remote function selection | 5-239 |
| F102 | 13 | Starting frequency | 5-243, 5-245 |
| F103 | 571 | Holding time at a start | 5-243 |
| F200 | 140 | Backlash acceleration stopping frequency | 5-232 |
| F201 | 141 | Backlash acceleration stopping time | 5-232 |
| F202 | 142 | Backlash deceleration stopping frequency | 5-232 |
| F203 | 143 | Backlash deceleration stopping time | 5-232 |
| F300 | 380 | Acceleration S-pattern 1 | 5-232 |
| F301 | 381 | Deceleration S-pattern 1 | 5-232 |
| F302 | 382 | Acceleration S-pattern 2 | 5-232 |
| F303 | 383 | Deceleration S-pattern 2 | 5-232 |
| F400 | 516 | S-pattern time at a start of acceleration | 5-232 |
| F401 | 517 | S-pattern time at a completion of acceleration | 5-232 |
| F402 | 518 | S-pattern time at a start of deceleration | 5-232 |
| F403 | 519 | S-pattern time at a completion of deceleration | 5-232 |
| F500 | 292 | Automatic acceleration/deceleration | 5-247, 5-252, 5-469 |
| F510 | 61 | Reference current | 5-247, 5-252 |
| F511 | 62 | Reference value at acceleration | 5-247 |
| F512 | 63 | Reference value at deceleration | 5-247 |
| F513 | 293 | Acceleration/deceleration separate selection | 5-247 |
| F520 | 64 | Starting frequency for elevator mode | 5-252 |

***Tab. 5-7:*** *Setting of acceleration/deceleration time and acceleration/deceleration pattern (2)*

### (D) Operation command and frequency command

Parameters that specify the inverter's command source, and parameters that set the motor driving frequency and torque.

| Pr. group | Pr. | Name | Refer to page |
|---|---|---|---|
| D000 | 79 | Operation mode selection Simple | 5-255, 5-264 |
| D001 | 340 | Communication startup mode selection | 5-264 |
| D010 | 338 | Communication operation command source | 5-266 |
| D011 | 339 | Communication speed command source | 5-266 |
| D012 | 550 | NET mode operation command source selection | 5-266 |
| D013 | 551 | PU mode operation command source selection | 5-266 |
| D020 | 78 | Reverse rotation prevention selection | 5-273 |
| D030 | 811 | Set resolution switchover | 5-83, 5-314 |
| D100 | 291 | Pulse train I/O selection | 5-274, 5-330 |
| D101 | 384 | Input pulse division scaling factor | 5-274 |
| D110 | 385 | Frequency for zero input pulse | 5-274 |
| D111 | 386 | Frequency for maximum input pulse | 5-274 |
| D200 | 15 | Jog frequency | 5-278 |
| D300 | 28 | Multi-speed input compensation selection | 5-280 |
| D301 | 4 | Multi-speed setting (high speed) Simple | 5-280 |
| D302 | 5 | Multi-speed setting (middle speed) Simple | 5-280 |
| D303 | 6 | Multi-speed setting (low speed) Simple | 5-280 |
| D304 to D307 | 24 to 27 | Multi-speed setting (4 speed to 7 speed) | 5-280 |
| D308 to D315 | 232 to 239 | Multi-speed setting (8 speed to 15 speed) | 5-280 |
| D400 | 804 | Torque command source selection | 5-129 |
| D401 | 805 | Torque command value (RAM) | 5-129 |
| D402 | 806 | Torque command value (RAM, EEPROM) | 5-129 |
| D403 | 1114 | Torque command reverse selection | 5-129 |

***Tab. 5-8:*** *Operation command and frequency command*

### (H) Protective function parameter

Parameters to protect the motor and the inverter.

| Pr. group | Pr. | Name | Refer to page |
|---|---|---|---|
| H000 | 9 | Electronic thermal O/L relay Simple | 5-284, 5-66, 5-440 |
| H001 | 600 | First free thermal reduction frequency 1 | 5-284 |
| H002 | 601 | First free thermal reduction ratio 1 | 5-284 |
| H003 | 602 | First free thermal reduction frequency 2 | 5-284 |
| H004 | 603 | First free thermal reduction ratio 2 | 5-284 |
| H005 | 604 | First free thermal reduction frequency 3 | 5-284 |
| H006 | 607 | Motor permissible load level | 5-284 |
| H010 | 51 | Second electronic thermal O/L relay | 5-284, 5-66, 5-440 |
| H011 | 692 | Second free thermal reduction frequency 1 | 5-284 |
| H012 | 693 | Second free thermal reduction ratio 1 | 5-284 |
| H013 | 694 | Second free thermal reduction frequency 2 | 5-284 |
| H014 | 695 | Second free thermal reduction ratio 2 | 5-284 |
| H015 | 696 | Second free thermal reduction frequency 3 | 5-284 |
| H016 | 608 | Second motor permissible load level | 5-284 |
| H020 | 561 | PTC thermistor protection level | 5-284 |
| H030 | 875 | Fault definition | 5-292 |
| H100 | 244 | Cooling fan operation selection | 5-293 |
| H101 | 249 | Earth (ground) fault detection at start | 5-417 |
| H102 | 598 | Undervoltage level | 5-294 |
| H103 | 997 | Fault initiation | 5-70 |
| H200 | 251 | Output phase loss protection selection | 5-296 |
| H201 ④ | 872 | Input phase loss protection selection | 5-296 |
| H300 | 65 | Retry selection | 5-297 |
| H301 | 67 | Number of retries at fault occurrence | 5-297 |
| H302 | 68 | Retry waiting time | 5-297 |
| H303 | 69 | Retry count display erase | 5-297 |
| H400 | 1 | Maximum frequency Simple | 5-300 |
| H401 | 2 | Minimum frequency Simple | 5-300 |
| H402 | 18 | High speed maximum frequency | 5-300 |
| H410 | 807 | Speed limit selection | 5-133 |
| H411 | 808 | Forward rotation speed limit/speed limit | 5-133 |
| H412 | 809 | Reverse rotation speed limit/ reverse-side speed limit | 5-133 |

***Tab. 5-9:*** *Protective function parameter (1)*

| Pr. group | Pr. | Name | Refer to page |
|---|---|---|---|
| H414 | 1113 | Speed limit method selection | 5-133 |
| H415 | 873 ① | Speed limit | 5-115 |
| H416 | 285 | Speed deviation excess detection frequency | 5-115, 5-469 5-669 |
| H417 | 853 ① | Speed deviation time | 5-115 |
| H420 | 31 | Frequency jump 1A | 5-302 |
| H421 | 32 | Frequency jump 1B | 5-302 |
| H422 | 33 | Frequency jump 2A | 5-302 |
| H423 | 34 | Frequency jump 2B | 5-302 |
| H424 | 35 | Frequency jump 3A | 5-302 |
| H425 | 36 | Frequency jump 3B | 5-302 |
| H429 | 552 | Frequency jump range | 5-302 |
| H500 | 22 | Stall prevention operation level (Torque limit level) | 5-83, 5-304 |
| H501 | 156 | Stall prevention operation selection | 5-304 |
| H600 | 48 | Second stall prevention operation level | 5-304 |
| H601 | 49 | Second stall prevention operation frequency | 5-304 |
| H602 | 114 | Third stall prevention operation level | 5-304 |
| H603 | 115 | Third stall prevention operation frequency | 5-304 |
| H610 | 23 | Stall prevention operation level compensation factor at double speed | 5-304 |
| H611 | 66 | Stall prevention operation reduction starting frequency | 5-304 |
| H620 | 148 | Stall prevention level at 0 V input | 5-304 |
| H621 | 149 | Stall prevention level at 10 V input | 5-304 |
| H631 | 154 | Voltage reduction selection during stall prevention operation | 5-304 |
| H700 | 810 | Torque limit input method selection | 5-83 |
| H701 | 812 | Torque limit level (regeneration) | 5-83 |
| H702 | 813 | Torque limit level (3rd quadrant) | 5-83 |
| H703 | 814 | Torque limit level (4th quadrant) | 5-83 |
| H710 | 815 | Torque limit level 2 | 5-83 |
| H720 | 816 | Torque limit level during acceleration | 5-83 |
| H721 | 817 | Torque limit level during deceleration | 5-83 |
| H730 | 874 | OLT level setting | 5-83 |
| H800 | 374 | Overspeed detection level | 5-312 |
| H881 | 690 | Deceleration check time | 5-313 |

***Tab. 5-9:*** *Protective function parameter (2)*

### (M) Monitor display and monitor output signal

Parameters regarding the inverter's operating status. These parameters are used to set the monitors and output signals.

| Pr. group | Pr. | Name | Refer to page |
|---|---|---|---|
| M000 | 37 | Speed display | 5-314 |
| M001 | 505 | Speed setting reference | 5-314 |
| M002 | 144 | Speed setting switchover | 5-314 |
| M020 | 170 | Watt-hour meter clear | 5-317 |
| M021 | 563 | Energization time carrying-over times | 5-317 |
| M022 | 268 | Monitor decimal digits selection | 5-317 |
| M023 | 891 | Cumulative power monitor digit shifted times | 5-317, 5-343 |
| M030 | 171 | Operation hour meter clear | 5-317 |
| M031 | 564 | Operating time carrying-over times | 5-317 |
| M040 | 55 | Frequency monitoring reference | 5-330 |
| M041 | 56 | Current monitoring reference | 5-330 |
| M042 | 866 | Torque monitoring reference | 5-330 |
| M043 | 241 | Analog input display unit switchover | 5-388 |
| M044 | 290 | Monitor negative output selection | 5-317, 5-330 |
| M050 | 1106 | Torque monitor filter | 5-317 |
| M051 | 1107 | Running speed monitor filter | 5-317 |
| M052 | 1108 | Excitation current monitor filter | 5-317 |
| M060 | 663 | Control circuit temperature signal output level | 5-375 |
| M100 | 52 | Operation panel main monitor selection | 5-317 |
| M101 | 774 | Operation panel monitor selection 1 | 5-317 |
| M102 | 775 | Operation panel monitor selection 2 | 5-317 |
| M103 | 776 | Operation panel monitor selection 3 | 5-317 |
| M104 | 992 | Operation panel setting dial push monitor selection | 5-317 |
| M200 | 892 | Load factor | 5-343 |
| M201 | 893 | Energy saving monitor reference (motor capacity) | 5-343 |
| M202 | 894 | Control selection during commercial power-supply operation | 5-343 |
| M203 | 895 | Power saving rate reference value | 5-343 |
| M204 | 896 | Power unit cost | 5-343 |
| M205 | 897 | Power saving monitor average time | 5-343 |
| M206 | 898 | Power saving cumulative monitor clear | 5-343 |
| M207 | 899 | Operation time rate (estimated value) | 5-343 |
| M300 | 54 | FM/CA terminal function selection | 5-330 |
| M301 | 158 | AM terminal function selection | 5-330 |
| M310 | C0 (900) ② | FM/CA terminal calibration | 5-337 |

***Tab. 5-10:*** *Monitor display and monitor output signal (1)*

| Pr. group | Pr. | Name | Refer to page |
|---|---|---|---|
| M320 | C1 (901) ② | AM terminal calibration | 5-337 |
| M321 | 867 | AM output filter | 5-337 |
| M330 | C8 (930) ② | Current output bias signal | 5-337 |
| M331 | C9 (930) ② | Current output bias current | 5-337 |
| M332 | C10 (931) ② | Current output gain signal | 5-337 |
| M333 | C11 (931) ② | Current output gain current | 5-337 |
| M334 | 869 | Current output filter | 5-337 |
| M400 | 190 | RUN terminal function selection | 5-350 |
| M401 | 191 | SU terminal function selection | 5-350 |
| M402 | 192 | IPF terminal function selection | 5-350 |
| M403 | 193 | OL terminal function selection | 5-350 |
| M404 | 194 | FU terminal function selection | 5-350 |
| M405 | 195 | ABC1 terminal function selection | 5-350 |
| M406 | 196 | ABC2 terminal function selection | 5-350 |
| M430 | 157 | OL signal output timer | 5-83, 5-83 |
| M431 | 289 | Inverter output terminal filter | 5-350 |
| M433 | 166 | Output current detection signal retention time | 5-365 |
| M440 | 870 | Speed detection hysteresis | 5-361 |
| M441 | 41 | Up-to-frequency sensitivity | 5-361 |
| M442 | 42 | Output frequency detection | 5-361 |
| M443 | 43 | Output frequency detection for reverse rotation | 5-361 |
| M444 | 50 | Second output frequency detection | 5-361 |
| M445 | 116 | Third output frequency detection | 5-361 |
| M446 | 865 | Low speed detection | 5-361 |
| M460 | 150 | Output current detection level | 5-365 |
| M461 | 151 | Output current detection signal delay time | 5-365 |
| M462 | 152 | Zero current detection level | 5-365 |
| M463 | 153 | Zero current detection time | 5-365 |
| M464 | 167 | Output current detection operation selection | 5-365 |
| M470 | 864 | Torque detection | 5-367 |
| M500 | 495 | Remote output selection | 5-368 |
| M501 | 496 | Remote output data 1 | 5-368 |
| M502 | 497 | Remote output data 2 | 5-368 |

***Tab. 5-10:*** *Monitor display and monitor output signal (2)*

| Pr. group | Pr. | Name | Refer to page |
|---|---|---|---|
| M510 | 76 | Fault code output selection | 5-373 |
| M520 | 799 | Pulse increment setting for output power | 5-374 |
| M530 | 655 | Analog remote output selection | 5-370 |
| M531 | 656 | Analog remote output 1 | 5-370 |
| M532 | 657 | Analog remote output 2 | 5-370 |
| M533 | 658 | Analog remote output 3 | 5-370 |
| M534 | 659 | Analog remote output 4 | 5-370 |

***Tab. 5-10:*** *Monitor display and monitor output signal (3)*

### (T) Multi-function input terminal parameters

Parameters for the input terminals where inverter commands are received through.

| Pr. group | Pr. | Name | Refer to page |
|---|---|---|---|
| T000 | 73 | Analog input selection | 5-376, 5-382 |
| T001 | 267 | Terminal 4 input selection | 5-376 |
| T002 | 74 | Input filter time constant | 5-386 |
| T003 | 822 | Speed setting filter 1 | 5-386 |
| T004 | 826 | Torque setting filter 1 | 5-386 |
| T005 | 832 | Speed setting filter 2 | 5-386 |
| T006 | 836 | Torque setting filter 2 | 5-386 |
| T007 | 849 | Analog input offset adjustment | 5-386 |
| T010 | 868 | Terminal 1 function assignment | 5-83, 5-304, 5-381 |
| T021 | 242 | Terminal 1 added compensation amount (terminal 2) | 5-382 |
| T022 | 125 | Terminal 2 frequency setting gain frequency Simple | 5-388 |
| T040 | 858 | Terminal 4 function assignment | 5-83, 5-304, 5-381 |
| T041 | 243 | Terminal 1 added compensation amount (terminal 4) | 5-382 |
| T042 | 126 | Terminal 4 frequency setting gain frequency Simple | 5-388 |
| T050 | 252 | Override bias | 5-382 |
| T051 | 253 | Override gain | 5-382 |
| T052 | 573 | 4 mA input check selection | 5-404 |
| T053 | 777 | 4 mA input fault operation frequency | 5-404 |
| T054 | 778 | 4 mA input check filter | 5-404 |
| T100 | C12 (917) ② | Terminal 1 bias frequency (speed) | 5-388 |
| T101 | C13 (917) ② | Terminal 1 bias (speed) | 5-388 |
| T102 | C14 (918) ② | Terminal 1 gain frequency (speed) | 5-388 |
| T103 | C15 (918) ② | Terminal 1 gain (speed) | 5-388 |
| T110 | C16 (919) ② | Terminal 1 bias command (torque/magnetic flux) | 5-396 |
| T111 | C17 (919) ② | Terminal 1 bias (torque/magnetic flux) | 5-396 |

***Tab. 5-11:*** *Multi-function input terminal parameters (1)*

| Pr. group | Pr. | Name | Refer to page |
|---|---|---|---|
| T112 | C18 (920) ② | Terminal 1 gain command (torque/magnetic flux) | 5-396 |
| T113 | C19 (920) ② | Terminal 1 gain (torque/magnetic flux) | 5-396 |
| T200 | C2 (902) ② | Terminal 2 frequency setting bias frequency | 5-388 |
| T201 | C3 (902) ② | Terminal 2 frequency setting bias | 5-388 |
| T202 | 125 (903) ② | Terminal 2 frequency setting gain frequency | 5-388 |
| T203 | C4 (903) ② | Terminal 2 frequency setting gain | 5-388 |
| T400 | C5 (904) ② | Terminal 4 frequency setting bias frequency | 5-388 |
| T401 | C6 (904) ② | Terminal 4 frequency setting bias | 5-388 |
| T402 | 126 (905) ② | Terminal 4 frequency setting gain frequency | 5-388 |
| T403 | C7 (905) ② | Terminal 4 frequency setting gain | 5-388 |
| T410 | C38 (932) ② | Terminal 4 bias command (torque/ magnetic flux) | 5-396 |
| T411 | C39 (932) ② | Terminal 4 bias (torque/magnetic flux) | 5-396 |
| T412 | C40 (933) ② | Terminal 4 gain command (torque/ magnetic flux) | 5-396 |
| T413 | C41 (933) ② | Terminal 4 gain (torque/magnetic flux) | 5-396 |
| T700 | 178 | STF terminal function selection | 5-409 |
| T701 | 179 | STR terminal function selection | 5-409 |
| T702 | 180 | RL terminal function selection | 5-409 |
| T703 | 181 | RM terminal function selection | 5-409 |
| T704 | 182 | RH terminal function selection | 5-409 |
| T705 | 183 | RT terminal function selection | 5-409 |
| T706 | 184 | AU terminal function selection | 5-409 |
| T707 | 185 | JOG terminal function selection | 5-409 |
| T708 | 186 | CS terminal function selection | 5-409 |
| T709 | 187 | MRS terminal function selection | 5-409 |
| T710 | 188 | STOP terminal function selection | 5-409 |
| T711 | 189 | RES terminal function selection | 5-409 |
| T720 | 17 | MRS input selection | 5-413 |
| T721 | 599 | X10 terminal input selection | 5-652 |
| T730 | 155 | RT signal function validity condition selection | 5-415 |
| T740 | 699 | Input terminal filter | 5-409 |

***Tab. 5-11:*** *Multi-function input terminal parameters (2)*

### (C) Motor constant parameters

Parameters for the applied motor setting.

| Pr. group | Pr. | Name | Refer to page |
|---|---|---|---|
| C000 | 684 | Tuning data unit switchover | 5-66, 5-440 |
| C100 | 71 | Applied motor | 5-421, 5-426, 5-440 |
| C101 | 80 | Motor capacity | 5-55, 5-426, 5-440 |
| C102 | 81 | Number of motor poles | 5-55, 5-426, 5-440 |
| C103 | 9 | Rated motor current Simple | 5-284, 5-66, 5-440 |
| C104 | 83 | Rated motor voltage | 5-55, 5-426, 5-440 |
| C105 | 84 | Rated motor frequency | 5-55, 5-426, 5-440 |
| C106 | 702 | Maximum motor frequency | 5-440 |
| C106 | 706 | Induced voltage constant (phi f) | 5-440 |
| C107 | 707 | Motor inertia (integer) | 5-440 |
| C108 | 724 | Motor inertia (exponent) | 5-440 |
| C110 | 96 | Auto tuning setting/status | 5-66, 5-440 |
| C111 | 95 | Online auto tuning selection | 5-451 |
| C112 | 818 | Easy gain tuning response level setting | 5-66 |
| C113 | 819 | Easy gain tuning selection | 5-66 |
| C114 | 880 | Load inertia ratio | 5-66, 5-106 |
| C120 | 90 | Motor constant (R1) | 5-426, 5-440 |
| C121 | 91 | Motor constant (R2) | 5-426 |
| C122 | 92 | Motor constant (L1)/d-shaft inductance (Ld) | 5-426, 5-440 |
| C123 | 93 | Motor constant (L2)/q-shaft inductance (Lq) | 5-426, 5-440 |
| C124 | 94 | Motor constant (X) | 5-426 |
| C125 | 82 | Motor excitation current | 5-280 |
| C126 | 859 | Torque current/Rated PM motor current | 5-66, 5-440 |
| C131 | 711 | Motor Ld decay ratio | 5-440 |
| C132 | 712 | Motor Lq decay ratio | 5-440 |
| C133 | 725 | Motor protection current level | 5-440 |

***Tab. 5-12:*** *Motor constant parameters (1)*

| Pr. group | Pr. | Name | Refer to page |
|---|---|---|---|
| C140 | 369 ① | Number of encoder pulses | 2-72, 5-487, 5-669 |
| C141 | 359 ① | Encoder rotation direction | 2-72, 5-487, 5-669 |
| C148 | 376 ① | Encoder signal loss detection enable/disable selection | 5-455 |
| C150 | 1002 | Lq tuning target current adjustment coefficient | 5-440 |
| C182 | 717 | Starting resistance tuning compensation | 5-440 |
| C185 | 721 | Starting magnetic pole position detection pulse width | 5-440 |
| C200 | 450 | Second applied motor | 5-421 |
| C201 | 453 | Second motor capacity | 5-426, 5-440 |
| C202 | 454 | Number of second motor poles | 5-426, 5-440 |
| C203 | 51 | Rated second motor current | 5-284, 5-426, 5-440 |
| C204 | 456 | Rated second motor voltage | 5-426, 5-440 |
| C205 | 457 | Rated second motor frequency | 5-426, 5-440 |
| C206 | 743 | Second motor maximum frequency | 5-440 |
| C207 | 744 | Second motor inertia (integer) | 5-440 |
| C208 | 745 | Second motor inertia (exponent) | 5-440 |
| C210 | 463 | Second motor auto tuning setting/ status | 5-426, 5-440 |
| C211 | 574 | Second motor online auto tuning | 5-451 |
| C220 | 458 | Second motor constant (R1) | 5-426, 5-440 |
| C221 | 459 | Second motor constant (R2) | 5-426 |
| C222 | 460 | Second motor constant (L1) / d-shaft inductance (Ld) | 5-426, 5-440 |
| C223 | 461 | Second motor constant (L2) / q-shaft inductance (Lq) | 5-426, 5-440 |
| C224 | 462 | Second motor constant (X) | 5-426 |
| C225 | 455 | Second motor excitation current | 5-426 |
| C226 | 860 | Second motor torque current/Rated PM motor current | 5-426, 5-440 |
| C230 | 738 | Second motor induced voltage constant (phi f) | 5-440 |
| C231 | 739 | Second motor Ld decay ratio | 5-440 |
| C232 | 740 | Second motor Lq decay ratio | 5-440 |
| C233 | 746 | Second motor protection current level | 5-440 |
| C282 | 741 | Second starting resistance tuning compensation | 5-440 |
| C285 | 742 | Second motor magnetic pole detection pulse width | 5-440 |

***Tab. 5-12:*** *Motor constant parameters (2)*

### (A) Application parameters

Parameters to set a specific application.

| Pr. group | Pr. | Name | Refer to page |
|---|---|---|---|
| A000 | 135 | Electronic bypass sequence selection | 5-457 |
| A001 | 136 | MC switchover interlock time | 5-457 |
| A002 | 137 | Start waiting time | 5-457 |
| A003 | 138 | Bypass selection at a fault | 5-457 |
| A004 | 139 | Automatic switchover frequency from inverter to bypass operation | 5-457 |
| A005 | 159 | Automatic switchover frequency range from bypass to inverter operation | 5-457 |
| A006 | 248 | Self power management selection | 5-465 |
| A007 | 254 | Main circuit power OFF waiting time | 5-465 |
| A100 | 278 | Brake opening frequency | 5-469 |
| A101 | 279 | Brake opening current | 5-469 |
| A102 | 280 | Brake opening current detection time | 5-469 |
| A103 | 281 | Brake operation time at start | 5-469 |
| A104 | 282 | Brake operation frequency | 5-469 |
| A105 | 283 | Brake operation time at stop | 5-469 |
| A106 | 284 | Deceleration detection function selection | 5-469 |
| A107 | 285 | Overspeed detection frequency | 5-115, 5-469 |
| A108 | 639 | Brake opening current selection | 5-469 |
| A109 | 640 | Brake operation frequency selection | 5-469 |
| A110 | 292 | Automatic acceleration/deceleration | 5-247, 5-252, 5-469 |
| A120 | 642 | Second brake opening frequency | 5-469 |
| A121 | 643 | Second brake opening current | 5-469 |
| A122 | 644 | Second brake opening current detection time | 5-469 |
| A123 | 645 | Second brake operation time at start | 5-469 |
| A124 | 646 | Second brake operation frequency | 5-469 |
| A125 | 647 | Second brake operation time at stop | 5-469 |
| A126 | 648 | Second deceleration detection function selection | 5-469 |
| A128 | 650 | Second brake opening current selection | 5-469 |
| A129 | 651 | Second brake operation frequency selection | 5-469 |
| A130 | 641 | Second brake sequence operation selection | 5-469 |

***Tab. 5-13:*** *Application parameters (1)*

| Pr. group | Pr. | Name | Refer to page |
|---|---|---|---|
| A200 | 270 | Stop-on contact/load torque high-speed frequency control selection | 5-474, 5-478 |
| A201 | 271 | High-speed setting maximum current | 5-478 |
| A202 | 272 | Middle-speed setting minimum current | 5-478 |
| A203 | 273 | Current averaging range | 5-478 |
| A204 | 274 | Current averaging filter time constant | 5-478 |
| A205 | 275 | Stop-on contact excitation current low-speed multiplying factor | 5-474 |
| A206 | 276 | PWM carrier frequency at stop-on contact | 5-474 |
| A300 | 592 | Traverse function selection | 5-482 |
| A301 | 593 | Maximum amplitude amount | 5-482 |
| A302 | 594 | Amplitude compensation amount during deceleration | 5-482 |
| A303 | 595 | Amplitude compensation amount during acceleration | 5-482 |
| A304 | 596 | Amplitude acceleration time | 5-482 |
| A305 | 597 | Amplitude deceleration time | 5-482 |
| A310 | 1072 | DC brake judgment time for swinging suppression control operation | 5-484 |
| A311 | 1073 | Swinging suppression control operation selection | 5-484 |
| A312 | 1074 | Swinging suppression frequency | 5-484 |
| A313 | 1075 | Swinging suppression depth | 5-484 |
| A314 | 1076 | Swinging suppression width | 5-484 |
| A315 | 1077 | Rope length | 5-484 |
| A316 | 1078 | Trolley weight | 5-484 |
| A317 | 1079 | Load weight | 5-484 |
| A510 | 350 ① | Stop position command selection | 5-487 |
| A511 | 360 ① | 16-bit data selection | 5-487 |
| A512 | 361 ① | Position shift | 5-487 |
| A520 | 362 ① | Orientation position loop gain | 5-487 |
| A521 | 363 ① | Completion signal output delay time | 5-487 |
| A522 | 364 ① | Encoder stop check time | 5-487 |
| A523 | 365 ① | Orientation limit | 5-487 |
| A524 | 366 ① | Recheck time | 5-487 |
| A525 | 393 ① | Orientation selection | 5-487 |
| A526 | 351 ① | Orientation speed | 5-487 |
| A527 | 352 ① | Creep speed | 5-487 |
| A528 | 353 ① | Creep switchover position | 5-487 |
| A529 | 354 ① | Position loop switchover position | 5-487 |

***Tab. 5-13:*** *Application parameters (2)*

| Pr. group | Pr. | Name | Refer to page |
|---|---|---|---|
| A530 | 355 ① | DC injection brake start position | 5-487 |
| A531 | 356 ① | Internal stop position command | 5-487 |
| A532 | 357 ① | Orientation in-position zone | 5-487 |
| A533 | 358 ① | Servo torque selection | 5-487 |
| A542 | 396 ① | Orientation speed gain (P term) | 5-487 |
| A543 | 397 ① | Orientation speed integral time | 5-487 |
| A544 | 398 ① | Orientation speed gain (D term) | 5-487 |
| A545 | 399 ① | Orientation deceleration ratio | 5-487 |
| A600 | 759 | PID unit selection | 5-521 |
| A601 | 131 | PID upper limit | 5-504, 5-530 |
| A602 | 132 | PID lower limit | 5-504, 5-530 |
| A603 | 553 | PID deviation limit | 5-504 |
| A604 | 554 | PID signal operation selection | 5-504 |
| A605 | 1134 | PID upper limit manipulated value | 5-530 |
| A606 | 1135 | PID lower limit manipulated value | 5-530 |
| A610 | 128 | PID action selection | 5-504, 5-530 |
| A611 | 133 | PID action set point | 5-504, 5-530 |
| A612 | 127 | PID control automatic switchover frequency | 5-504 |
| A613 | 129 | PID proportional band | 5-504, 5-530 |
| A614 | 130 | PID integral time | 5-504, 5-530 |
| A615 | 134 | PID differential time | 5-504, 5-530 |
| A616 | 760 | Pre-charge fault selection | 5-525 |
| A617 | 761 | Pre-charge ending level | 5-525 |
| A618 | 762 | Pre-charge ending time | 5-525 |
| A619 | 763 | Pre-charge upper detection level | 5-525 |
| A620 | 764 | Pre-charge time limit | 5-525 |
| A621 | 575 | Output interruption detection time | 5-504 |
| A622 | 576 | Output interruption detection level | 5-504 |
| A623 | 577 | Output interruption cancel level | 5-504 |
| A624 | 609 | PID set point/deviation input selection | 5-504, 5-530 |
| A625 | 610 | PID measured value input selection | 5-504, 5-530 |
| A630 | C42 (934) ② | PID display bias coefficient | 5-521 |

***Tab. 5-13:*** *Application parameters (3)*

| Pr. group | Pr. | Name | Refer to page |
|---|---|---|---|
| A631 | C43 (934) ② | PID display bias analog value | 5-521 |
| A632 | C44 (935) ② | PID display gain coefficient | 5-521 |
| A633 | C45 (935) ② | PID display gain analog value | 5-521 |
| A640 | 1142 | Second PID unit selection | 5-504 |
| A641 | 1143 | Second PID upper limit | 5-504 |
| A642 | 1144 | Second PID lower limit | 5-504 |
| A643 | 1145 | Second PID deviation limit | 5-504 |
| A644 | 1146 | Second PID signal operation selection | 5-504 |
| A650 | 753 | Second PID action selection | 5-504 |
| A651 | 755 | Second PID action set point | 5-504 |
| A652 | 754 | Second PID control automatic switchover frequency | 5-504 |
| A653 | 756 | Second PID proportional band | 5-504 |
| A654 | 757 | Second PID integral time | 5-504 |
| A655 | 758 | Second PID differential time | 5-504 |
| A656 | 765 | Second pre-charge fault selection | 5-525 |
| A657 | 766 | Second pre-charge ending level | 5-525 |
| A658 | 767 | Second pre-charge ending time | 5-525 |
| A659 | 768 | Second pre-charge upper detection level | 5-525 |
| A660 | 769 | Second pre-charge time limit | 5-525 |
| A661 | 1147 | Second output interruption detection time | 5-504 |
| A662 | 1148 | Second output interruption detection level | 5-504 |
| A663 | 1149 | Second output interruption cancel level | 5-504 |
| A664 | 1140 | Second PID set point/deviation input selection | 5-504 |
| A665 | 1141 | Second PID measured value input selection | 5-504 |
| A670 | 1136 | Second PID display bias coefficient | 5-521 |
| A671 | 1137 | Second PID display bias analog value | 5-521 |
| A672 | 1138 | Second PID display gain coefficient | 5-521 |
| A673 | 1139 | Second PID display gain analog value | 5-521 |
| A680 | 573 | 4 mA input check selection | 5-404 |
| A681 | 777 | 4 mA input fault operation frequency | 5-404 |
| A682 | 778 | Current input check filter | 5-404 |
| A700 | 162 | Automatic restart after instantaneous power failure selection | 5-540, 5-549 |
| A701 | 299 | Rotation direction detection selection at restarting | 5-540 |
| A702 | 57 | Restart coasting time | 5-540, 5-549 |

***Tab. 5-13:*** *Application parameters (4)*

| Pr. group | Pr. | Name | Refer to page |
|---|---|---|---|
| A703 | 58 | Restart cushion time | 5-540 |
| A704 | 163 | First cushion time for restart | 5-540 |
| A705 | 164 | First cushion voltage for restart | 5-540 |
| A710 | 165 | Stall prevention operation level for restart | 5-540 |
| A711 | 298 | Frequency search gain | 5-540 |
| A712 | 560 | Second frequency search gain | 5-540 |
| A730 ④ | 261 | Power failure stop selection | 5-558 |
| A731 ④ | 262 | Subtracted frequency at deceleration start | 5-558 |
| A732 ④ | 263 | Subtraction starting frequency | 5-558 |
| A733 ④ | 264 | Power-failure deceleration time 1 | 5-558 |
| A734 ④ | 265 | Power-failure deceleration time 2 | 5-558 |
| A735 ④ | 266 | Power failure deceleration time switchover frequency | 5-558 |
| A785 ④ | 294 | UV avoidance voltage gain | 5-558 |
| A786 ④ | 668 | Power failure stop frequency gain | 5-558 |
| A800 | 414 | PLC function operation selection | 5-564 |
| A801 | 415 | Inverter operation lock mode setting | 5-564 |
| A802 | 416 | Pre-scale function selection | 5-564 |
| A803 | 417 | Pre-scale setting value | 5-564 |
| A804 | 498 | PLC function flash memory clear | 5-564 |
| A810 to A859 | 1150 to 1199 | PLC function user parameters 1 to 50 | 5-564 |
| A900 | 1020 | Trace operation selection | 5-568 |
| A901 | 1021 | Trace mode selection | 5-568 |
| A902 | 1022 | Sampling cycle | 5-568 |
| A903 | 1023 | Number of analog channels | 5-568 |
| A904 | 1024 | Sampling auto start | 5-568 |
| A905 | 1025 | Trigger mode selection | 5-568 |
| A906 | 1026 | Number of sampling before trigger | 5-568 |
| A910 | 1027 | Analog source selection (1ch) | 5-568 |
| A911 | 1028 | Analog source selection (2ch) | 5-568 |
| A912 | 1029 | Analog source selection (3ch) | 5-568 |
| A913 | 1030 | Analog source selection (4ch) | 5-568 |
| A914 | 1031 | Analog source selection (5ch) | 5-568 |
| A915 | 1032 | Analog source selection (6ch) | 5-568 |
| A916 | 1033 | Analog source selection (7ch) | 5-568 |
| A917 | 1034 | Analog source selection (8ch) | 5-568 |
| A918 | 1035 | Analog trigger channel | 5-568 |

***Tab. 5-13:*** *Application parameters (5)*

| Pr. group | Pr. | Name | Refer to page |
|---|---|---|---|
| A919 | 1036 | Analog trigger operation selection | 5-568 |
| A920 | 1037 | Analog trigger level | 5-568 |
| A930 | 1038 | Digital source selection (1ch) | 5-568 |
| A931 | 1039 | Digital source selection (2ch) | 5-568 |
| A932 | 1040 | Digital source selection (3ch) | 5-568 |
| A933 | 1041 | Digital source selection (4ch) | 5-568 |
| A934 | 1042 | Digital source selection (5ch) | 5-568 |
| A935 | 1043 | Digital source selection (6ch) | 5-568 |
| A936 | 1044 | Digital source selection (7ch) | 5-568 |
| A937 | 1045 | Digital source selection (8ch) | 5-568 |
| A938 | 1046 | Digital trigger channel | 5-568 |
| A939 | 1047 | Digital trigger operation selection | 5-568 |

***Tab. 5-13:*** *Application parameters (6)*

### (B) Position control parameters

Parameters for the position control setting.

| Pr. group | Pr. | Name | Refer to page |
|---|---|---|---|
| B000 | 419 | Position command source selection | 5-151, 5-167 |
| B001 | 420 | Command pulse scaling factor numerator (electronic gear numerator) | 5-171 |
| B002 | 421 | Command pulse multiplication denominator (electronic gear denominator) | 5-171 |
| B003 | 422 | Position control gain | 5-175 |
| B004 | 423 | Position feed forward gain | 5-175 |
| B005 | 424 | Position command acceleration/ deceleration time constant | 5-171 |
| B006 | 425 | Position feed forward command filter | 5-175 |
| B007 | 426 | In-position width | 5-173 |
| B008 | 427 | Excessive level error | 5-173 |
| B009 | 428 | Command pulse selection | 5-167 |
| B010 | 429 | Clear signal selection | 5-167 |
| B011 | 430 | Pulse monitor selection | 5-167 |
| B012 | 446 | Model position control gain | 5-146 |
| B020 | 464 | Digital position control sudden stop deceleration time | 5-151 |
| B021 | 465 | First target position lower 4 digits | 5-151 |
| B022 | 466 | First target position upper 4 digits | 5-151 |
| B023 | 467 | Second target position lower 4 digits | 5-151 |
| B024 | 468 | Second target position upper 4 digits | 5-151 |
| B025 | 469 | Third target position lower 4 digits | 5-151 |
| B026 | 470 | Third target position upper 4 digits | 5-151 |
| B027 | 471 | Fourth target position lower 4 digits | 5-151 |
| B028 | 472 | Fourth target position upper 4 digits | 5-151 |
| B029 | 473 | Fifth target position lower 4 digits | 5-151 |
| B030 | 474 | Fifth target position upper 4 digits | 5-151 |
| B031 | 475 | Sixth target position lower 4 digits | 5-151 |
| B032 | 476 | Sixth target position upper 4 digits | 5-151 |
| B033 | 477 | Seventh target position lower 4 digits | 5-151 |
| B034 | 478 | Seventh target position upper 4 digits | 5-151 |
| B035 | 479 | Eighth target position lower 4 digits | 5-151 |
| B036 | 480 | Eighth target position upper 4 digits | 5-151 |

***Tab. 5-14:*** *Position control parameters (1)*

| Pr. group | Pr. | Name | Refer to page |
|---|---|---|---|
| B037 | 481 | Ninth target position lower 4 digits | 5-151 |
| B038 | 482 | Ninth target position upper 4 digits | 5-151 |
| B039 | 483 | Tenth target position lower 4 digits | 5-151 |
| B040 | 484 | Tenth target position upper 4 digits | 5-151 |
| B041 | 485 | Eleventh target position lower 4 digits | 5-151 |
| B042 | 486 | Eleventh target position upper 4 digits | 5-151 |
| B043 | 487 | Twelfth target position lower 4 digits | 5-151 |
| B044 | 488 | Twelfth target position upper 4 digits | 5-151 |
| B045 | 489 | Thirteenth target position lower 4 digits | 5-151 |
| B046 | 490 | Thirteenth target position upper 4 digits | 5-151 |
| B047 | 491 | Fourteenth target position lower 4 digits | 5-151 |
| B048 | 492 | Fourteenth target position upper 4 digits | 5-151 |
| B049 | 493 | Fifteenth target position lower 4 digits | 5-151 |
| B050 | 494 | Fifteenth target position upper 4 digits | 5-151 |
| B100 | 1220 | Target position/speed selection | A-39 |
| B101 | 1221 | Start command edge detection selection | 5-151 |
| B120 | 1222 | First positioning acceleration time | 5-151 |
| B121 | 1223 | First positioning deceleration time | 5-151 |
| B122 | 1224 | First positioning dwell time | 5-151 |
| B123 | 1225 | First positioning sub-function | 5-151 |
| B124 | 1226 | Second positioning acceleration time | 5-151 |
| B125 | 1227 | Second positioning deceleration time | 5-151 |
| B126 | 1228 | Second positioning dwell time | 5-151 |
| B127 | 1229 | Second positioning sub-function | 5-151 |
| B128 | 1230 | Third positioning acceleration time | 5-151 |
| B129 | 1231 | Third positioning deceleration time | 5-151 |
| B130 | 1232 | Third positioning dwell time | 5-151 |
| B131 | 1233 | Third positioning sub-function | 5-151 |
| B132 | 1234 | Fourth positioning acceleration time | 5-151 |
| B133 | 1235 | Fourth positioning deceleration time | 5-151 |
| B134 | 1236 | Fourth positioning dwell time | 5-151 |

***Tab. 5-14:*** *Position control parameters (2)*

| Pr. group | Pr. | Name | Refer to page |
|---|---|---|---|
| B135 | 1237 | Fourth positioning sub-function | 5-151 |
| B136 | 1238 | Fifth positioning acceleration time | 5-151 |
| B137 | 1239 | Fifth positioning deceleration time | 5-151 |
| B138 | 1240 | Fifth positioning dwell time | 5-151 |
| B139 | 1241 | Fifth positioning sub-function | 5-151 |
| B140 | 1242 | Sixth positioning acceleration time | 5-151 |
| B141 | 1243 | Sixth positioning deceleration time | 5-151 |
| B142 | 1244 | Sixth positioning dwell time | 5-151 |
| B143 | 1245 | Sixth positioning sub-function | 5-151 |
| B144 | 1246 | Seventh positioning acceleration time | 5-151 |
| B145 | 1247 | Seventh positioning deceleration time | 5-151 |
| B146 | 1248 | Seventh positioning dwell time | 5-151 |
| B147 | 1249 | Seventh positioning sub-function | 5-151 |
| B148 | 1250 | Eighth positioning acceleration time | 5-151 |
| B149 | 1251 | Eighth positioning deceleration time | 5-151 |
| B150 | 1252 | Eighth positioning dwell time | 5-151 |
| B151 | 1253 | Eighth positioning sub-function | 5-151 |
| B152 | 1254 | Ninth positioning acceleration time | 5-151 |
| B153 | 1255 | Ninth positioning deceleration time | 5-151 |
| B154 | 1256 | Ninth positioning dwell time | 5-151 |
| B155 | 1257 | Ninth positioning sub-function | 5-151 |
| B156 | 1258 | Tenth positioning acceleration time | 5-151 |
| B157 | 1259 | Tenth positioning deceleration time | 5-151 |
| B158 | 1260 | Tenth positioning dwell time | 5-151 |
| B159 | 1261 | Tenth positioning sub-function | 5-151 |
| B160 | 1262 | Eleventh positioning acceleration time | 5-151 |
| B161 | 1263 | Eleventh positioning deceleration time | 5-151 |
| B162 | 1264 | Eleventh positioning dwell time | 5-151 |
| B163 | 1265 | Eleventh positioning sub-function | 5-151 |
| B164 | 1266 | Twelfth positioning acceleration time | 5-151 |

***Tab. 5-14:*** *Position control parameters (3)*

| Pr. group | Pr. | Name | Refer to page |
|---|---|---|---|
| B165 | 1267 | Twelfth positioning deceleration time | 5-151 |
| B166 | 1268 | Twelfth positioning dwell time | 5-151 |
| B167 | 1269 | Twelfth positioning sub-function | 5-151 |
| B168 | 1270 | Thirteenth positioning acceleration time | 5-151 |
| B169 | 1271 | Thirteenth positioning deceleration time | 5-151 |
| B170 | 1272 | Thirteenth positioning dwell time | 5-151 |
| B171 | 1273 | Thirteenth positioning sub-function | 5-151 |
| B172 | 1274 | Fourteenth positioning acceleration time | 5-151 |
| B173 | 1275 | Fourteenth positioning deceleration time | 5-151 |
| B174 | 1276 | Fourteenth positioning dwell time | 5-151 |
| B175 | 1277 | Fourteenth positioning sub-function | 5-151 |
| B176 | 1278 | Fifteenth positioning acceleration time | 5-151 |
| B177 | 1279 | Fifteenth positioning deceleration time | 5-151 |
| B178 | 1280 | Fifteenth positioning dwell time | 5-151 |
| B179 | 1281 | Fifteenth positioning sub-function | 5-151 |
| B180 | 1282 | Home position return method selection | 5-151 |
| B181 | 1283 | Home position return speed | 5-151 |
| B182 | 1284 | Home position return creep speed | 5-151 |
| B183 | 1285 | Home position shift amount lower 4 digits | 5-151 |
| B184 | 1286 | Home position shift amount upper 4 digits | 5-151 |
| B185 | 1287 | Travel distance after proximity dog ON lower 4 digits | 5-151 |
| B186 | 1288 | Travel distance after proximity dog ON upper 4 digits | 5-151 |
| B187 | 1289 | Home position return stopper torque | 5-151 |
| B188 | 1290 | Home position return stopper waiting time | 5-151 |
| B190 | 1292 | Position control terminal input selection | 5-151 |
| B191 | 1293 | Roll feeding mode selection | 5-151 |
| B192 | 1294 | Position detection lower 4 digits | 5-173 |
| B193 | 1295 | Position detection upper 4 digits | 5-173 |
| B194 | 1296 | Position detection selection | 5-173 |
| B195 | 1297 | Position detection hysteresis width | 5-173 |

***Tab. 5-14:*** *Position control parameters (4)*

### (N) Operation via communication and its settings

Parameters for communication operation. These parameters set the communication specifications and operation.

| Pr. group | Pr. | Name | Refer to page |
|---|---|---|---|
| N000 | 549 | Protocol selection | 5-583 |
| N001 | 342 | Communication EEPROM write selection | 5-583 |
| N002 | 539 | Modbus-RTU communication check time interval | 5-607 |
| N013 | 502 | Stop mode selection at communication error | 5-583 |
| N014 | 779 | Operation frequency during communication error | 5-583 |
| N020 | 117 | PU communication station number | 5-587 |
| N021 | 118 | PU communication speed | 5-587 |
| N022 | 119 | PU communication data length | 5-587 |
| N023 | 119 | PU communication stop bit length | 5-587 |
| N024 | 120 | PU communication parity check | 5-587 |
| N025 | 121 | Number of PU communication retries | 5-587 |
| N026 | 122 | PU communication check time interval | 5-587 |
| N027 | 123 | PU communication waiting time setting | 5-587 |
| N028 | 124 | PU communication CR/LF selection | 5-587 |
| N030 | 331 | RS-485 communication station number | 5-587 |
| N031 | 332 | RS-485 communication speed | 5-587 |
| N032 | 333 | PU communication data length | 5-587 |
| N033 | 333 | PU communication stop bit length | 5-587 |
| N034 | 334 | RS-485 communication parity check selection | 5-587 |
| N035 | 335 | RS-485 communication retry count | 5-587 |
| N036 | 336 | RS-485 communication check time interval | 5-587 |
| N037 | 337 | RS-485 communication waiting time setting | 5-587 |
| N038 | 341 | RS-485 communication CR/LF selection | 5-587 |
| N040 | 547 | USB communication station number | 5-625 |
| N041 | 548 | USB communication check time interval | 5-625 |
| N080 | 343 | Communication error count | 5-607 |
| N500 to N543, N550 to N559 | 1300 to 1343, 1350 to 1359 | Communication option parameters. For details, refer to the Instruction Manual of the option. | |

***Tab. 5-15:*** *Operation via communication and its settings*

### (G) Control Parameter

Parameters for motor control.

| Pr. group | Pr. | Name | Refer to page |
|---|---|---|---|
| G000 | 0 | Torque boost Simple | 5-629 |
| G001 | 3 | Base frequency Simple | 5-631 |
| G002 | 19 | Base frequency voltage | 5-631 |
| G003 | 14 | Load pattern selection | 5-634 |
| G010 | 46 | Second torque boost | 5-629 |
| G011 | 47 | Second V/F (base frequency) | 5-631 |
| G020 | 112 | Third torque boost | 5-629 |
| G021 | 113 | Third V/F (base frequency) | 5-631 |
| G030 | 60 | Energy saving control selection | 5-637 |
| G040 | 100 | V/F1(first frequency) | 5-638 |
| G041 | 101 | V/F1(first frequency voltage) | 5-638 |
| G042 | 102 | V/F2 (second frequency) | 5-638 |
| G043 | 103 | V/F2 (second frequency voltage) | 5-638 |
| G044 | 104 | V/F3 (third frequency) | 5-638 |
| G045 | 105 | V/F3 (third frequency voltage) | 5-638 |
| G046 | 106 | V/F4 (fourth frequency) | 5-638 |
| G047 | 107 | V/F4 (fourth frequency voltage) | 5-638 |
| G048 | 108 | V/F5 (fifth frequency) | 5-638 |
| G049 | 109 | V/F5 (fifth frequency voltage) | 5-638 |
| G100 | 10 | DC injection brake operation frequency | 5-640 |
| G101 | 11 | DC injection brake operation time | 5-640 |
| G102 | 802 | Pre-excitation selection | 5-640 |
| G103 | 850 | Brake operation selection | 5-640 |
| G105 | 522 | Output stop frequency | 5-648 |
| G106 | 250 | Stop selection | 5-417 |
| G107 ③ | 70 | Special regenerative brake duty | 5-652 |
| G110 | 12 | DC injection brake operation voltage | 5-640 |
| G120 | 882 | Regeneration avoidance operation selection | 5-662 |
| G121 | 883 | Regeneration avoidance operation level | 5-662 |
| G122 | 884 | Regeneration avoidance at deceleration detection sensitivity | 5-662 |
| G123 | 885 | Regeneration avoidance compensation frequency limit value | 5-662 |
| G124 | 886 | Regeneration avoidance voltage gain | 5-662 |
| G125 | 665 | Regeneration avoidance frequency gain | 5-662 |
| G130 | 660 | Increased magnetic excitation deceleration operation selection | 5-666 |
| G131 | 661 | Magnetic excitation increase rate | 5-666 |
| G132 | 662 | Increased magnetic excitation current level | 5-666 |
| G200 | 800 | Control method selection | 5-55 |
| G203 | 245 | Rated slip | 5-668 |

***Tab. 5-16:*** *Control Parameter (1)*

| Pr. group | Pr. | Name | Refer to page |
|---|---|---|---|
| G204 | 246 | Slip compensation time constant | 5-668 |
| G205 | 247 | Constant-power range slip compensation selection | 5-668 |
| G206 | 1116 | Constant output range speed control P gain compensation | 5-94 |
| G210 | 803 | Constant output range torque characteristic selection | 5-83, 5-129 |
| G211 | 820 | Speed control P gain 1 | 5-66 |
| G212 | 821 | Speed control integral time 1 | 5-66 |
| G213 | 824 | Torque control P gain 1 (current loop proportional gain) | 5-141 |
| G214 | 825 | Torque control integral time 1 (current loop integral time) | 5-141 |
| G215 | 823 ① | Speed detection filter 1 | 5-180 |
| G216 | 827 | Torque detection filter 1 | 5-180 |
| G217 | 854 | Excitation ratio | 5-181 |
| G218 | 1115 | Speed control integral term clear time | 5-94 |
| G220 | 877 | Speed feed forward control/model adaptive speed control selection | 5-106 5-175 |
| G221 | 878 | Speed feed forward filter | 5-106 |
| G222 | 879 | Speed feed forward torque limit | 5-106 |
| G223 | 881 | Speed feed forward gain | 5-106 |
| G224 | 828 | Model speed control gain | 5-106 |
| G230 | 840 ① | Torque bias selection | 5-110 |
| G231 | 841 ① | Torque bias 1 | 5-110 |
| G232 | 842 ① | Torque bias 2 | 5-110 |
| G233 | 843 ① | Torque bias 3 | 5-110 |
| G234 | 844 ① | Torque bias filter | 5-110 |
| G235 | 845 ① | Torque bias operation time | 5-110 |
| G236 | 846 ① | Torque bias balance compensation | 5-110 |
| G237 | 847 ① | Fall-time torque bias terminal 1 bias | 5-110 |
| G238 | 848 ① | Fall-time torque bias terminal 1 gain | 5-110 |
| G240 | 367 ① | Speed feedback range | 5-669 |
| G241 | 368 ① | Feedback gain | 5-669 |
| G250 | 788 | Low speed range torque characteristic selection | 5-74 |
| G260 | 1121 | Per-unit speed control reference frequency | 5-94 |
| G261 | 1117 | Speed control P gain 1 (per-unit system) | 5-94 |
| G262 | 1119 | Model speed control gain (per-unit system) | 5-106 |
| G300 | 451 | Second motor control method selection | 5-55 |

***Tab. 5-16:*** *Control Parameter (2)*

| Pr. group | Pr. | Name | Refer to page |
|---|---|---|---|
| G311 | 830 | Speed control P gain 2 | 5-66 |
| G312 | 831 | Speed control integral time 2 | 5-66 |
| G313 | 834 | Torque control P gain 2 | 5-141 |
| G314 | 835 | Torque control integral time 2 | 5-141 |
| G315 | 833 ① | Speed detection filter 2 | 5-180 |
| G316 | 837 | Torque detection filter 2 | 5-180 |
| G350 | 747 | Second motor low-speed range torque characteristic selection | 5-74 |
| G361 | 1118 | Speed control P gain 2 (per-unit system) | 5-94 |
| G400 | 286 | Droop gain | 5-672 |
| G401 | 287 | Droop filter time constant | 5-672 |
| G402 | 288 | Droop function activation selection | 5-672 |
| G403 | 994 | Droop break point gain | 5-672 |
| G404 | 995 | Droop break point torque | 5-672 |
| G410 | 653 | Speed smoothing control | 5-675 |
| G411 | 654 | Speed smoothing cutoff frequency | 5-675 |
| G601 | 1003 | Notch filter frequency | 5-118 |
| G602 | 1004 | Notch filter depth | 5-118 |
| G603 | 1005 | Notch filter width | 5-118 |
| G932 | 89 | Speed control gain (Advanced magnetic flux vector) | 5-66 |
| G942 | 569 | Second motor speed control gain | 5-66 |

***Tab. 5-16:*** *Control Parameter (3)*

① Setting can be made only when the FR-A8AP is mounted.

② The parameter number in parentheses is the one for use with the parameter unit (FR-PU07).

③ Setting can be made only for the standard model.

④ Setting can be made only for the standard model and the IP55 compatible model.

# 5.2 Control method

V/F control (initial setting), Advanced magnetic flux vector control, Real sensorless vector control, vector control, and PM sensorless vector control are available with this inverter.

### V/F control

It controls the frequency and voltage so that the ratio of frequency (F) to voltage (V) is constant while changing the frequency.

### Advanced magnetic flux vector control

This control performs vector calculation and divide the inverter's output current into an excitation current and into a torque current. The frequency and the voltage are then compensated to flow the motor current that meets the load torque. This control methods improves the torque generation at a low speed. The output frequency is further compensated (slip compensation) to bring the actual motor speed closer to the commanded speed. This function is useful when the load fluctuates are large.

**NOTE**

Advanced magnetic flux vector control requires the following conditions.
If the conditions are not satisfied, select V/F control. Otherwise, malfunctions such as insufficient torque, uneven rotation may occur.

- For the motor capacity, the rated current should be equal to or less than the rated inverter current. (It must be 0.4 kW or higher.)
  Using a motor with the rated current substantially lower than the rated inverter current will cause torque ripples, etc. and degrade the speed and torque accuracies. As a reference, select the motor with the rated motor current that is about 40% or higher of the rated inverter current.
- The motor described in the table below is used.

| Motor | Condition |
|---|---|
| Mitsubishi standard motor (SF-JR) | Offline auto tuning is not required |
| Mitsubishi high-efficiency motor (SF-HR) | |
| Mitsubishi constant-torque motor (SF-JRCA 4P, SF-HRCA) | |
| Mitsubishi high-performance energy-saving motor (SF-PR) | |
| Other motors (other manufacturers, SF-TH, etc.) | Offline auto tuning is required |

- Single-motor operation (one motor to one inverter) is performed.
- The wiring length from inverter to motor is 30 m or less. (When the wiring length exceeds 30 m, perform offline auto tuning in a wired state.)
- A sine wave filter (MT-BSL/BSC) is not used.

**Real sensorless vector control**

- The motor speed estimation enables the speed control and the torque control to control currents more accurately. When a high-accuracy, fast-response control is needed, select Real sensorless vector control, and perform offline auto tuning.
- This control method can be applied for the following purposes:
  - To minimize the speed fluctuation even at a severe load fluctuation
  - To generate a low speed torque
  - To prevent machine from damage due to a too large torque (torque limit)
  - To perform the torque control

**NOTE**

The Real sensorless vector control requires the following conditions.
If the conditions are not satisfied, select V/F control. Otherwise, malfunctions such as insufficient torque, uneven rotation may occur.

- For the motor capacity, the rated current should be equal to or less than the rated inverter current. (It must be 0.4 kW or higher.)
  Using a motor with the rated current substantially lower than the rated inverter current will cause torque ripples, etc. and degrade the speed and torque accuracies. As a reference, select the motor with the rated motor current that is about 40% or higher of the rated inverter current.
- Offline auto tuning is performed.
  Offline auto tuning is necessary under Real sensorless vector control even when the Mitsubishi motor is used.
- Single-motor operation (one motor to one inverter) is performed.
- A surge voltage suppression filter (FR-ASF/FR-BMF) or sine wave filter (MT-BSL/BSC) is not used.

**Vector control**

- When FR-A8AP is mounted, full-scale vector control operation can be performed using a motor with encoder. Fast response/high accuracy speed control (zero speed control, servo lock), torque control, and position control can be performed.
- What is vector control?
  Vector control has excellent control characteristic compared to V/F control and other controls. The control characteristic of the vector control is equal to those of DC machines.
  This control method can be applied for the following purposes:
  - To minimize the speed fluctuation even at a severe load fluctuation
  - To generate a low speed torque
  - To prevent machine from damage due to a too large torque (torque limit)
  - To perform torque control or position control
  - To control the torque at a servo-lock status (motor shaft stopped status)

**NOTE**

Vector control requires the following conditions.
When the conditions are not satisfied, malfunctions such as insufficient torque, uneven rotation may occur.

- For the motor capacity, the rated motor current should be equal to or less than the rated inverter current. (It must be 0.4 kW or higher.)
  Using a motor with the rated current substantially lower than the rated inverter current will cause torque ripples, etc. and degrade the speed and torque accuracies. As a reference, select the motor with the rated motor current that is about 40% or higher of the rated inverter current.
- The motor described in the table below is used.

| Motor | Condition |
|---|---|
| Vector control dedicated motor (SF-V5RU 1500 r/min series) | Offline auto tuning is not required |
| Mitsubishi standard motor with encoder (SF-JR) | |
| Mitsubishi high-efficiency motor with encoder (SF-HR) | |
| Mitsubishi constant-torque motor with encoder (SF-JRCA 4P, SF-HRCA) | |
| Other motors (motors other than SF-V5RU 1500 r/min series, other manufacturers' motors, etc.) | Offline auto tuning is required |

- Single-motor operation (one motor to one inverter) is performed.
- The wiring length from inverter to motor is 30 m or less. (When the wiring length exceeds 30 m, perform offline auto tuning in a wired state.)
- A surge voltage suppression filter (FR-ASF/FR-BMF) or sine wave filter (MT-BSL/BSC) is not used.

### PM sensorless vector control

- Highly efficient motor control and highly accurate motor speed control can be performed by using the inverter with a PM (permanent magnet embedded) motor, which is more efficient than an induction motor.
- The motor speed is calculated based on the output voltage and current from the inverter. It does not require a speed detector such as an encoder. The inverter drives the PM motor with the least required current when a load is applied in order to achieve the highest motor efficiency.
- Performing the IPM parameter initialization makes the IPM motor MM-CF ready for the PM sensorless vector control.

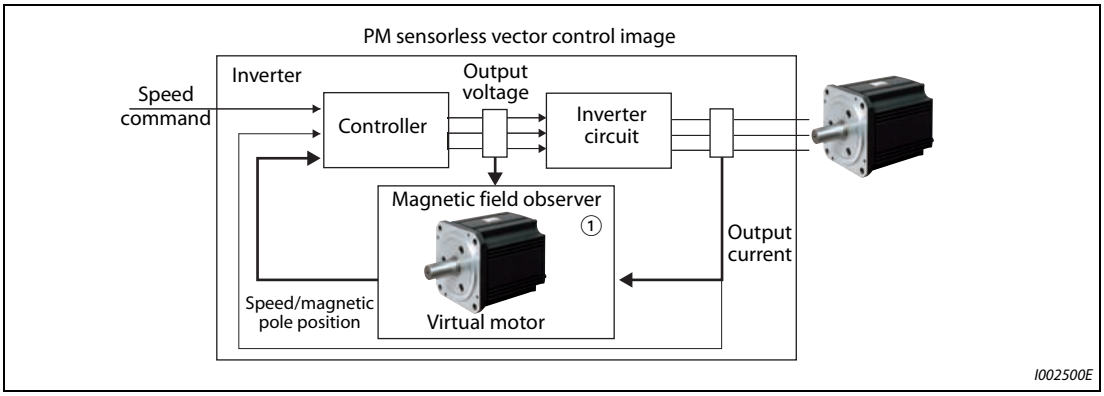


***Fig. 5-1:*** *PM sensorless vector control image*

① A magnetic field observer is a control method that calculates the motor speed/magnetic pole position based on the motor voltage and current of a virtual motor which is set up in the drive unit.

**NOTES**

The PM sensorless vector control requires the following conditions.

- The motor described in the table below is used.

| Motor | Condition |
|---|---|
| Mitsubishi IPM motor (MM-CF) | Offline auto tuning is not required |
| IPM motor (other than MM-CF), SPM motor | Offline auto tuning is required |

- For the motor capacity, the rated motor current should be equal to or less than the rated inverter current. (It must be 0.4 kW or higher.)
  Using a motor with the rated current substantially lower than the rated inverter current will cause torque ripples, etc. and degrade the speed and torque accuracies. As a reference, select the motor with the rated motor current that is about 40% or higher of the rated inverter current.
- Single-motor operation (one motor to one inverter) is performed.
- The overall wiring length with the motor is 100 m or less. (Refer to page 2-32.) (Even with the IPM motor MM-CF, when the wiring length exceeds 30 m, perform offline auto tuning.)
- A surge voltage suppression filter (FR-ASF/FR-BMF) or sine wave filter (MT-BSL/BSC) is not used.

## 5.2.1 Vector control and Real sensorless vector control

Vector control is one of the control techniques for driving an induction motor. To help explain vector control, the fundamental equivalent circuit of an induction motor is shown below:

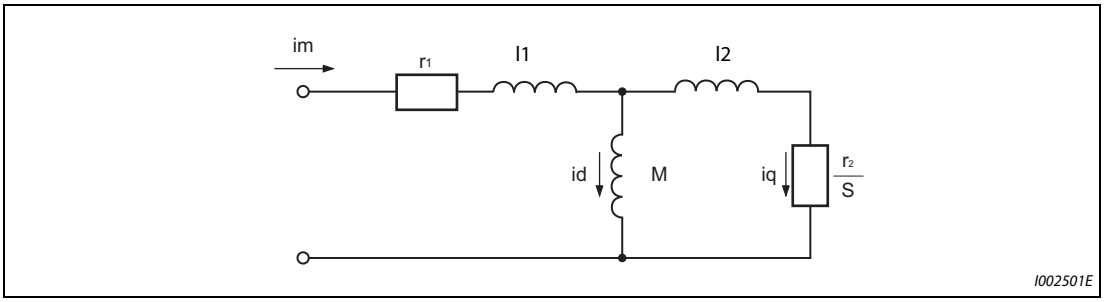


***Fig. 5-2:*** *Equivalent circuit of an induction motor*

r1: Primary resistance
r2: Secondary resistance
l1: Primary leakage inductance
l2: Secondary leakage inductance
M: Mutual inductance
S: Slip
id: Excitation current
iq: Torque current
im: Motor current

In the above diagram, currents flowing in the induction motor can be classified into a current id (excitation current) for making a magnetic flux in the motor and a current iq (torque current) for causing the motor to develop torque.

In vector control, the voltage and output frequency are calculated to control the motor so that the excitation current and torque current flow to the optimum as described below:

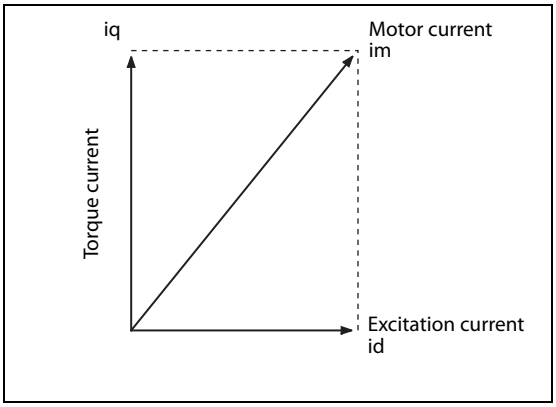


***Fig. 5-3:*** *Motor current components*

- The excitation current is controlled to place the internal magnetic flux of the motor in the optimum status.
- The torque command value is derived so that the difference between the motor speed command and the actual speed (speed estimated value for Real sensorless vector control) obtained from the encoder connected to the motor shaft is zero. Torque current is controlled so that torque as set in the torque command is developed.

Motor-generated torque (TM), slip angular velocity (ωs) and the motor's secondary magnetic flux (Φ2) can be found by the following calculation:

TM ~ Φ2 × iq

Φ2 = M × id

ωs = (r2/L2 × iq/id), where L2: secondary inductance

L2 = l2 + M

Vector control provides the following advantages:

- Excellent control characteristics when compared to V/F control and other control techniques, achieving the control characteristics equal to those of DC machines.
- Applicable to fast response applications with which induction motors were previously regarded as difficult to use.
  Applications requiring a wide variable-speed range from extremely low speed to high speed, frequent acceleration/deceleration operations, continuous four-quadrant operations, etc.
- Allows torque control.
- Allows servo-lock torque control which generates a torque in the motor shaft while stopped. (Not available under Real sensorless vector control.

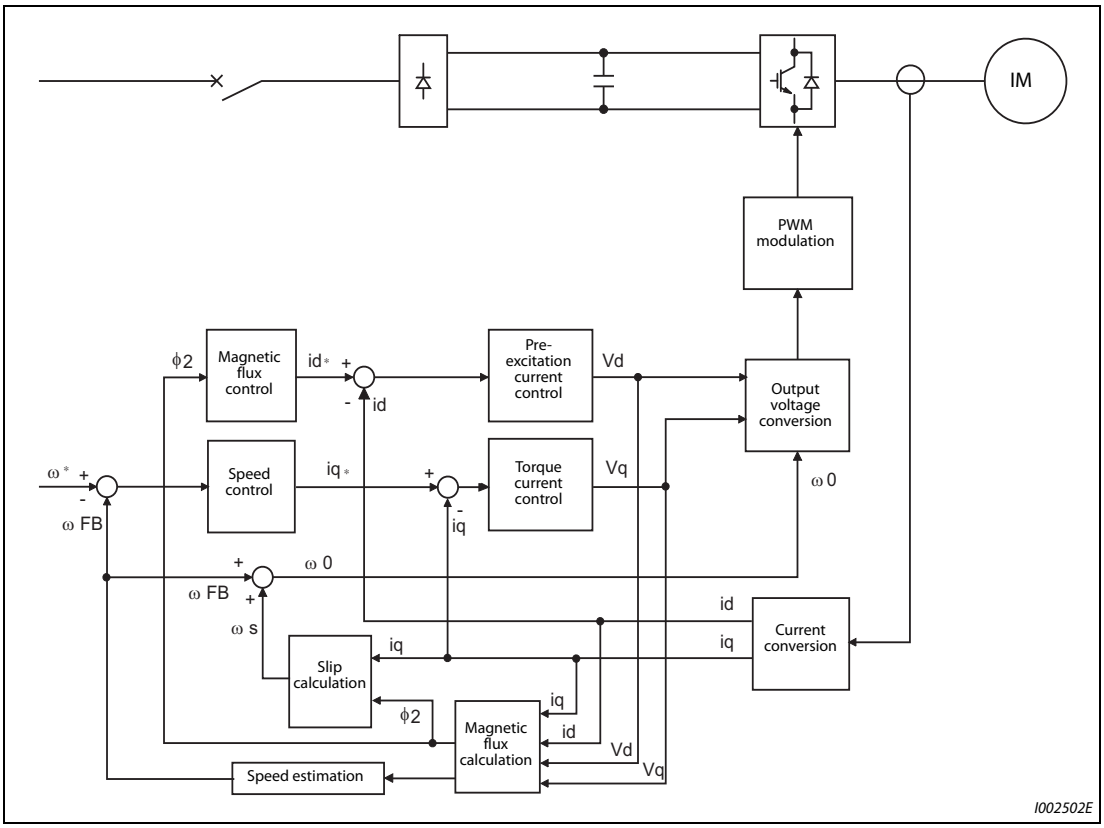


***Fig. 5-4:*** *Block diagram of Real sensorless vector control*

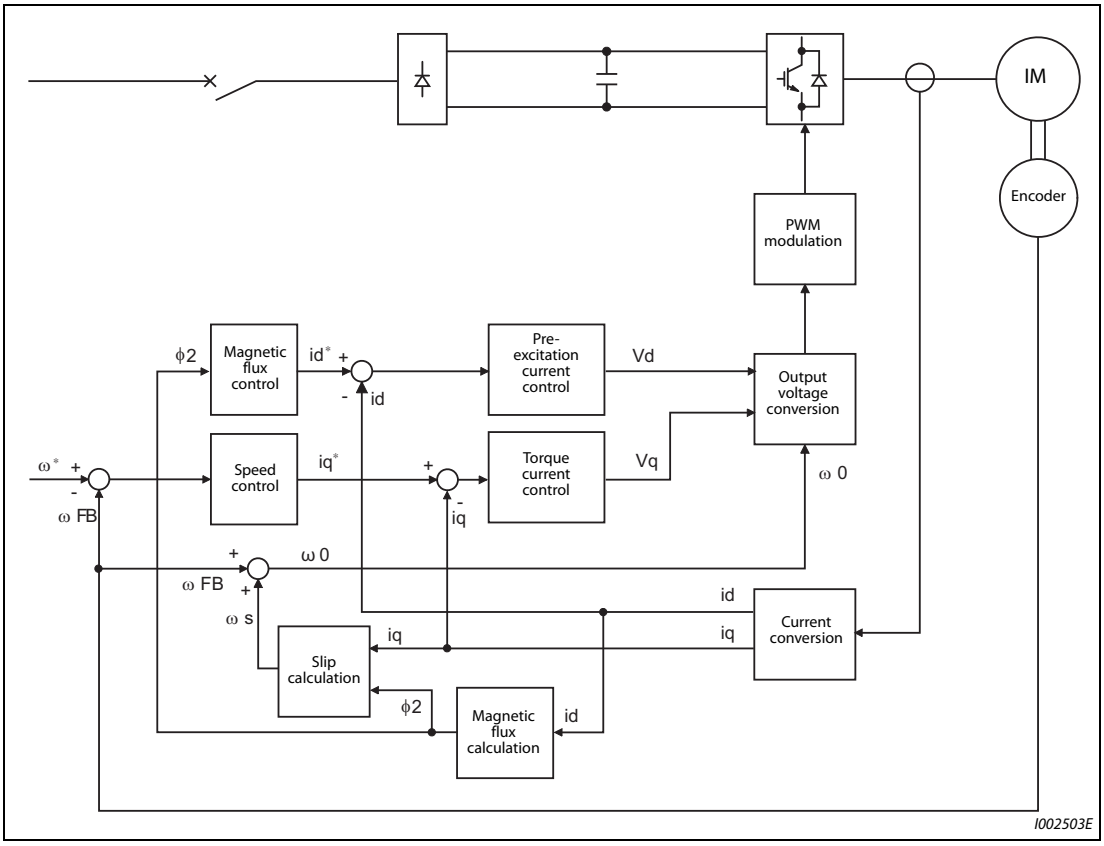


***Fig. 5-5:*** *Block diagram of Vector control*

### Speed control

Speed control operation is performed to zero the difference between the speed command (ω*) and actual rotation value detected by encoder ($\omega_{FB}$). At this time, the motor load is found and its result is transferred to the torque current controller as a torque current command ($i_q$*).

### Torque current control

A voltage ($V_q$) is calculated to flow a current ($i_q$) which is identical to the torque current command ($i_q$*) found by the speed controller.

### Magnetic flux control

The magnetic flux (Φ2) of the motor is derived from the excitation current (id). The excitation current command ($i_d$*) is calculated to use that motor magnetic flux (Φ2) as a predetermined magnetic flux.

### Excitation current control

A voltage ($V_d$) is calculated to flow a current ($i_d$) which is identical to the excitation current command ($i_d$*).

### Output frequency calculation

Motor slip (ωs) is calculated on the basis of the torque current value ($i_q$) and magnetic flux (Φ2). The output frequency ($\omega_0$) is found by adding that slip (ωs) to the feedback ($\omega_{FB}$) found by a feedback from the encoder.

The above results are used to make PWM modulation and run the motor.

## 5.2.2 Changing the control method

Set the control method and control mode.

V/F control, Advanced magnetic flux vector control, Real sensorless vector control, Vector control, and PM sensorless vector control are the control methods available for selection.

The control modes are speed control, torque control, and position control. These are set when selecting Advanced magnetic flux vector control, Real sensorless vector control, Vector control, and PM sensorless vector control. Select a control mode from speed control mode, torque control mode and position control mode under Real sensorless vector control or vector control. The initial setting is V/F control.

When using an IPM motor MM-CF, simply performing the IPM parameter initialization enables the PM sensorless vector control and selects the speed control and position control.

- Select a control method and control mode by using Pr. 800 (Pr. 451) "Control method selection".
- The control mode can be switched using the mode switching signal (MC).

| Pr. | Name | Initial value | Setting range | Description | |
|---|---|---|---|---|---|
| 71<br>C100 | Applied motor | 0 ① | 0 to 6, 13 to 16, 20, 23, 24, 30, 33, 34, 40, 43, 44, 50, 53, 54, 70, 73, 74, 330, 333, 334, 8090, 8093, 8094, 9090, 9093, 9094 | By selecting a standard motor or constant-torque motor, the thermal characteristic and motor constant of each motor are set. | |
| 80<br>C101 | Motor capacity | 9999 | 0.4 to 55 kW ① | Set the applied motor capacity. | |
| | | | 0 to 3600 kW ② | | |
| | | | 9999 | V/F control | |
| 81<br>C102 | Number of motor poles | 9999 | 2, 4, 6, 8, 10, 12 | Set the number of motor poles. | |
| | | | 9999 | V/F control | |
| 83<br>C104 | Rated motor voltage | 200/400 V ③ | 0 to 1000 V | Set the rated motor voltage (V). | |
| 84<br>C105 | Rated motor frequency | 9999 | 10 to 400 Hz | Set the rated motor frequency (Hz). | |
| | | | 9999 | The setting value of Pr. 3 "Base frequency" is used. ④ | |
| 800<br>G200 | Control method selection | 20 | 0 to 6 | Vector control | |
| | | | 9 | Vector control test operation | |
| | | | 10 to 12 | Real sensorless vector control | |
| | | | 13, 14 | PM sensorless vector control | |
| | | | 20 | V/F control<br>(Advanced magnetic flux vector control) | |
| | | | 100 to 106 | Vector control | Fast-response operation |
| | | | 109 | Vector control, PM sensorless vector control test operation | |
| | | | 110 to 112 | Real sensorless vector control | |
| | | | 110, 113, 114 | PM sensorless vector control | |
| 451<br>G300 | Second motor control method selection | 9999 | 10 to 12 | Real sensorless vector control | |
| | | | 13, 14 | PM sensorless vector control | |
| | | | 20 | V/F control (Advanced magnetic flux vector control) | |
| | | | 110 to 112 | Real sensorless vector control | Fast-response operation |
| | | | 110, 113, 114 | PM sensorless vector control | |
| | | | 9999 | The setting value of Pr. 800 "Control method selection" is used. | |

① For the FR-A820-03160(55K) or lower, and the FR-A840-01800(55K) or lower.

② For the FR-A820-03800(75K) or higher and the FR-A840-02160(75K) or higher.

③ The initial value differs according to the voltage class. (200V class/400V class)

④ When the IPM motor MM-CF is selected by Pr. 71 "Applied motor", the rated frequency of the MM-CF is used. When a PM motor other than the MM-CF is selected by Pr. 71, 75 Hz (for the motor capacity 15 kW or lower) or 100 Hz (18.5 kW or higher) is used.

**Setting the motor capacity and the number of motor poles (Pr. 80, Pr. 81)**

- Motor specifications (the motor capacity and the number of motor poles) must be set to select Advanced magnetic flux vector control, Real sensorless vector control or vector control.
- Set the motor capacity (kW) in Pr. 80 "Motor capacity" and set the number of motor poles in Pr. 81 "Number of motor poles".

**NOTE**

Setting the number of motor poles in Pr. 81 changes the Pr. 144 "Speed setting switchover" setting automatically. (Refer to page 5-314.)

### Selection of control method and control mode

Select the inverter control method from V/F control, Advanced magnetic flux vector control (speed control), Real sensorless vector control (speed control, torque control), vector control (speed control, torque control, and position control), and PM sensorless vector control (speed control, position control).

| Pr. 80 (Pr. 453), Pr. 81 (Pr. 454) | Pr. 71 (Pr. 450) | Pr. 800 setting value ① | Pr. 451 setting value ① | Control method | Control mode | Remarks |
|---|---|---|---|---|---|---|
| Other than 9999 | Induction motor | 0, 100 | — | Vector control ② | Speed control | — |
| | | 1, 101 | — | | Torque control | — |
| | | 2, 102 | — | | Speed control/torque control switchover | MC signal ON: torque control<br>MC signal OFF: speed control |
| | | 3, 103 | — | | Position control | — |
| | | 4, 104 | — | | Speed control/position control switchover | MC signal ON: position control<br>MC signal OFF: speed control |
| | | 5, 105 | — | | Position control/torque control switchover | MC signal ON: torque control<br>MC signal OFF: position control |
| | | 6, 106 | — | | Torque control (variable-current limiter control) | — |
| | | 9, 109 | — | Vector control test operation | | |
| | | 10, 110 ③ | | Real sensorless vector control | Speed control | — |
| | | 11, 111 | | | Torque control | — |
| | | 12, 112 | | | Speed control/torque control switchover | MC signal ON: torque control<br>MC signal OFF: speed control |
| | | 20 (initial value) | 20 | Advanced magnetic flux vector control | Speed control | — |
| | | — | 9999 (initial value) | Advanced magnetic flux vector control for second motor | | |
| | IPM motor (MM-CF) | 9, 109 | — | PM sensorless vector control test operation | | |
| | | 13, 113 | | PM sensorless vector control | Position control ⑨ | — |
| | | 14, 114 | | | Speed control/position control switchover ⑨ | MC signal ON: position control<br>MC signal OFF: speed control |
| | | 20 (initial value), 110 ④ | 20, 110 ⑤ | | Speed control | — |
| | IPM/SPM motor (other than MM-CF) | 9, 109 | — | PM sensorless vector control test operation | | |
| | | 20 (initial value), 110 ⑥ | 20, 110 ⑦ | PM sensorless vector control | Speed control | — |
| | IPM/SPM motor | — | 9999 (initial value) | The setting value of Pr. 800 is used for the second motor.<br>(PM sensorless vector control (speed control) when Pr. 800 = "9" or "109") | | |
| 9999 ⑧ | — | — | | V/F control | | |

***Tab. 5-17:*** *Selection of control method*

① The setting values of 100 and above are used when the fast-response operation is selected.
② Advanced magnetic flux vector control if FR-A8AP (option) is not installed.
③ The operation for the setting of "10 or 110" is performed when "13, 14, 113, or 114" is set.
④ The operation for the setting of "20 or 110" is performed when a value other than "9, 13, 14, 109, 113, or 114" is set.
⑤ The operation for the setting of "20 or 110" is performed when a value other than "13, 14, 113, 114, or 9999" is set.
⑥ The operation for the setting of "20 or 110" is performed when a value other than "9 or 109" is set.
⑦ The operation for the setting of "20 or 110" is performed when a value other than "9999" is set.
⑧ V/F control when Pr. 80 or Pr. 81 is "9999", regardless of the Pr. 800 setting. When Pr. 71 is set to the IPM motor MM-CF, PM sensorless vector control is enabled even if Pr. 80 ≠ "9999" or Pr. 81 = "9999".
⑨ Setting Pr. 788 (Pr. 747) = "0" (low-speed range torque characteristic disabled) selects speed control.

**Selecting the fast-response operation (Pr. 800 (Pr. 451) = "100 to 106, 109 to 114")**

Setting Pr. 800 = "any of 100 to 106 or 109 to 114" selects the fast-response operation. The fast-response operation is available during vector control, Real sensorless vector control, and PM sensorless vector control.

| Control method | Speed response | |
|---|---|---|
| | Fast-response operation Pr. 800 (Pr. 451) = "100 to 106, 109 to 114" | Normal-response operation Pr. 800 (Pr. 451) = "0 to 6, 9 to 14" |
| Vector control | 130 Hz at maximum | 50 Hz at maximum |
| Real sensorless vector control | 50 Hz at maximum ① | 20 Hz at maximum ② |
| | | 10 Hz at maximum ③ |
| PM sensorless vector control | 50 Hz at maximum | 30 Hz at maximum |

***Tab. 5-18:*** *Selecting the fast-response operation*

① When driving a 3.7 kW no-load motor.
② For the FR-A820-03160(55K) or lower and FR-A840-01800(55K) or lower.
③ For the FR-A820-03800(75K) or higher and FR-A840-02160(75K) or higher.

**NOTES**

During fast-response operation, the carrier frequency is always 4 kHz. (Refer to page 237.)

E.THT is more likely to occur when fast-response operation is set at the SLD or LD rating.

**Vector control test operation, PM sensorless vector control test operation (Pr. 800 = "9, 109"")**

Test operation in the speed control is available without connecting a motor.
The speed calculation changes to track the speed command, and such speed changes can be checked on the operation panel or by outputting it as analog signals to the terminal FM, AM, or CA.

**NOTES**

Since current is not detected and voltage is not output, monitors related to current and voltage such as output current and output voltage, etc. and output signals do not function.

For speed calculation, speed is calculated in consideration of Pr. 880 "Load inertia ratio".

Since current synchronization operation occurs during PM sensorless vector control, the output frequency becomes the same value as the command frequency.

### Valid I/O signals for test run

For the available I/O signals during test run, refer to table below.

- Input terminal function selection (Pr. 178 to Pr. 189)

| Signal name | Function |
|---|---|
| RL | Low-speed operation command |
| | Remote setting (setting clear) |
| | Stop-on-contact selection 0 |
| RM | Middle-speed operation command |
| | Remote setting (deceleration) |
| RH | High-speed operation command |
| | Remote setting (acceleration) |
| RT | Second function selection |
| | Stop-on-contact selection 1 |
| AU | Terminal 4 input selection |
| JOG | Jog operation selection |
| CS | Selection of automatic restart after instantaneous power failure, flying start |
| | Electronic bypass function |
| OH | External thermal relay input ① |
| REX | 15-speed selection |
| X9 | Third function selection |
| X10 | Inverter run enable signal |
| X11 | FR-HC2/FR-CC2 connection, instantaneous power failure detection |
| X12 | PU operation external interlock |

| Signal name | Function |
|---|---|
| X13 | External DC injection brake operation start |
| X14 | PID control valid terminal |
| X16 | PU/External operation switchover |
| X19 | Load torque high-speed frequency |
| X20 | S-pattern acceleration/ deceleration C switchover |
| LX | Pre-excitation/servo ON |
| MRS | Output stop |
| | Electronic bypass function |
| STP (STOP) | Start self-holding selection |
| TL | Torque limit selection |
| X37 | Traverse function selection |
| X44 | P/PI control switchover ① |
| TRG | Trace trigger input |
| TRC | Trace sampling start/end |
| SQ | Sequence start |
| STF | Forward rotation command |
| STR | Reverse rotation command |
| RES | Inverter reset |
| X64 | PID forward/reverse action switchover |

| Signal name | Function |
|---|---|
| X65 | PU/NET operation switchover |
| X66 | External/NET operation switchover |
| X67 | Command source switchover |
| NP | Simple position pulse train sign |
| CLR | Simple position droop pulse clear |
| X70 | DC feeding operation permission |
| X71 | DC feeding cancel |
| X72 | PID integral value reset |
| X73 | Second PID P control switchover |
| X74 | Magnetic flux decay output shutoff signal |
| X76 | Proximity dog |
| X77 | Pre-charge end command |
| X78 | Second pre-charge end command |
| X79 | Second PID forward/ reverse action switchover |
| X80 | Second PID control valid terminal |
| X87 | Sudden stop |
| X92 | Emergency stop |

***Tab. 5-19:*** *Valid input signals for test run*

① Enabled only during the vector control test operation.

● Output terminal function selection (Pr. 190 to Pr. 196)

| Signal name | Function | Signal name | Function | Signal name | Function |
|---|---|---|---|---|---|
| RUN | Inverter running | TU | Torque detection | Y87 | Main circuit capacitor life |
| SU | Up to frequency | Y40 | Trace status | Y88 | Cooling fan life |
| IPF | Instantaneous power failure/undervoltage | FB | Speed detection | Y89 | Inrush current limit circuit life |
| OL | Overload warning | FB2 | Second speed detection | Y90 | Life alarm |
| FU | Output frequency detection | FB3 | Third speed detection | Y91 | Fault output 3 |
| FU2 | Second output frequency detection | RUN2 | Inverter running 2 | Y92 | Energy saving average value updated timing |
| FU3 | Third output frequency detection | RUN3 | Inverter running and start command is ON | Y93 | Current average monitor signal |
| RBP | Regenerative brake pre-alarm | Y46 | During deceleration at occurrence of power failure (retained until release) | ALM2 | Fault output 2 |
| PU | PU operation mode | PID | During PID control activated | Y95 | Maintenance timer signal |
| RY | Inverter operation ready | Y48 | PID deviation limit | REM | Remote output |
| Y12 | Output current detection | Y49 | During pre-charge operation | ER | Alarm output 2 |
| Y13 | Zero current detection | Y50 | During second pre-charge operation | LF | Alarm |
| FDN | PID lower limit | Y51 | Pre-charge time over | ALM | Fault |
| FUP | PID upper limit | Y52 | Second pre-charge time over | FDN2 | Second PID lower limit |
| RL | PID forward/reverse rotation output | Y53 | Pre-charge level over | FUP2 | Second PID upper limit |
| MC1 | Electronic bypass MC1 | Y54 | Second pre-charge level over | RL2 | Second PID forward/ reverse rotation output |
| MC2 | Electronic bypass MC2 | IPM | During PM sensorless vector control | PID2 | Second During PID control activated |
| MC3 | Electronic bypass MC3 | Y64 | During retry | SLEEP2 | During second PID output shutoff |
| FAN | Fan fault output | EV | 24 V external power supply operation | Y205 | Second PID deviation limit |
| FIN | Heatsink overheat pre-alarm | SLEEP | PID output interruption | Y206 | Cooling fan operation command signal |
| Y30 | Forward rotation output (for FR-A8AP) | Y79 | Pulse train output of output power | Y207 | Control circuit temperature signal |
| Y31 | Reverse rotation output (for FR-A8AP) | RDY | Position control preparation ready | PS | PU stopped signal |
| RY2 | Operation ready 2 | Y85 | DC current feeding | | |
| LS | Low speed detection | Y86 | Control circuit capacitor life | | |

***Tab. 5-20:*** *Valid output signals for test run*

| Parameters referred to | | | |
|---|---|---|---|
| Pr. 178 to Pr. 189 | (input terminal function selection) | => | page 5-409 |
| Pr. 190 to Pr. 196 | (output terminal function selection) | => | page 5-350 |

**Valid/invalid status of monitor outputs during the test run**

○: Valid
×: Invalid (always displays 0)
Δ: Displays accumulated value before the test
—: Not monitored

| Types of monitor | DU/PU Monitor display | FM/AM/ CA Output |
|---|---|---|
| Output frequency | ○ | ○ |
| Fault display | ○ | — |
| Frequency setting value | ○ | ○ |
| Running speed | ○ | ○ |
| Converter output voltage | ○ | ○ |
| Electric thermal relay load factor | × ② | × ② |
| Output current peak value | × ② | × ② |
| Converter output voltage peak value | ○ | ○ |
| Load meter | ○ | ○ |
| Cumulative energization time | ○ | — |
| Reference voltage output | — | ○ |
| Actual operation time | ○ | — |
| Cumulative power | Δ | — |
| Trace status | ○ | × |
| Station number (RS-485 terminals) | ○ | — |
| Station number (PU connector) | ○ | — |
| Station number (CC-Link) | ○ | — |
| Energy saving effect | ○ | ○ |
| Cumulative energy saving | Δ | — |
| PID set point | ○ | ○ |
| PID measured value | ○ | ○ |

| Types of monitor | DU/PU Monitor display | FM/AM/ CA Output |
|---|---|---|
| PID deviation | ○ | ○ ③ |
| Input terminal status | ○ | — |
| Output terminal status | ○ | — |
| Option input terminal status | ○ | — |
| Option output terminal status | ○ | — |
| Motor thermal load factor | ○ ④ | ○ ④ |
| Inverter thermal load factor | ○ ④ | ○ ④ |
| PTC thermistor value | ○ | — |
| PID measured value 2 | ○ | ○ |
| Remote output 1 | ○ | ○ |
| Remote output 2 | ○ | ○ |
| Remote output 3 | ○ | ○ |
| Remote output 4 | ○ | ○ |
| PID manipulated amount | ○ | ○ ③ |
| Second PID set point | ○ | ○ |
| Second PID measured value | ○ | ○ |
| Second PID deviation | ○ | ○ ③ |
| Second PID measured value 2 | ○ | ○ |
| Second PID manipulated amount | ○ | ○ ③ |
| Dancer main speed setting | ○ | ○ |

***Tab. 5-21:*** *Monitor outputs during the test run*

① Different output interface (operation panel, parameter unit, terminal FM/CA or terminal AM) can output different monitored items. For details, refer to page 5-330.

② When the operation is switched to the test run, "0" is displayed. When PM sensorless vector control is selected again after a test run, the output current peak value and the electronic thermal relay load factor from the last operation are displayed.

③ The monitored status can be output via the terminal AM only.

④ When the operation is switched to the test run, accumulated thermal value is reduced by considering the output current is "0".

| Parameters referred to | | | |
|---|---|---|---|
| Pr. 52 | Operation panel main monitor selection | => | page 5-317 |
| Pr. 158 | AM terminal function selection | => | page 5-330 |

**Changing the control method with external terminals (RT signal, X18 signal)**

- Control method (V/F control, Advanced magnetic flux vector control, Real sensorless vector control, Vector control,) can be switched among using external terminals.
  The control method can be either switched using the Second function selection (RT) signal or the V/F switchover (X18) signal.
- When using the RT signal, set the second motor in Pr. 450 "Second applied motor" and set the second motor's control method in Pr. 451 "Second motor control method selection". Turning ON the RT signal enables the second function, enabling the switchover of the control method.
- When using the X18 signal, turning ON the X18 signal switches the presently-selected control method (Advanced magnetic flux vector control, Real sensorless vector control, vector control) to the V/F control. At this time, the second functions including electronic thermal characteristic are not changed. Use this method to switch the control method for one motor. (To switch the second functions, use the RT signal.)
  To input the X18 signal, set "18" in any of Pr. 178 to Pr. 189 (input terminal function selection) to assign the function.

| First motor control method | Second motor control method (RT signal-ON) | Pr. 450 setting value | Pr. 453, Pr. 454 setting value | Pr. 451 setting value |
|---|---|---|---|---|
| V/F control | V/F control | 9999 | — | — |
| | | — | — | 9999 |
| | | — | 9999 ② | — |
| | Advanced magnetic flux vector control | Induction motor | Other than 9999 | 20 |
| | Real sensorless vector control | | | 10 to 14 |
| | PM sensorless vector control | IPM/SPM motor | | Other than 9999 |
| Advanced magnetic flux vector control<br>Real sensorless vector control<br>Vector control<br>PM sensorless vector control ① | Same control as the first motor ① | 9999 | — | — |
| | | — | — | 9999 |
| | V/F control | — | 9999 ② | — |
| | Advanced magnetic flux vector control | Induction motor | Other than 9999 | 20, 9999 |
| | Real sensorless vector control | | | 10 to 14 |
| | PM sensorless vector control | IPM/SPM motor | | Other than 9999 |

***Tab. 5-22:*** *Control of the first and second motor*

① Turning the X18 signal ON while Pr. 81 = "12, 14, 16, 18, or 20" selects V/F control. If the X18 signal is unassigned, RT signal performs the same function; Turning ON the RT signal selects V/F control.

② V/F control when Pr. 453 or Pr. 454 is set to "9999" regardless of the Pr. 451 setting. When Pr. 450 is set to the IPM motor MM-CF, PM sensorless vector control is enabled even if Pr. 453 ≠ "9999" or Pr. 454 = "9999".

**NOTES**

RT signal is assigned to the terminal RT in the initial status. Set "3" in one of Pr. 178 to Pr. 189 (input terminal function selection) to assign the RT signal to another terminal.

The RT signal is a second function selection signal. The RT signal also enables other second functions. (Refer to page 5-415.)

The control method could be changed by external terminals (RT signal, X18 signal) while the inverter is stopped. If a signal is switched during the operation, the control method changes after the inverter stops.

**Changing the control mode with external terminals (MC signal)**

- To use ON/OFF of the MC signal to switch the control mode, set Pr. 800 or Pr. 451.
  Refer to page 5-57 and set Pr. 800 or Pr. 451.
  To input the MC signal, set "26" in any of Pr. 178 to Pr. 189 (input terminal function selection) to assign the function.
- When using an analog input terminal (terminal 1, 4) for torque limit and torque command, switching of the control mode changes the terminal function as shown below.
- Functions of the terminal 1 under different control modes

| Pr. 868 setting | Speed control/torque control switchover ① | | Speed control/position control switchover ② | | Position control/torque control switchover ③ | |
|---|---|---|---|---|---|---|
| | Speed control (MC signal-OFF) | Torque control (MC signal-ON) | Speed control (MC signal-OFF) | Position control (MC signal-ON) | Position control (MC signal-OFF) | Torque control (MC signal-ON) |
| 0 (initial value) | Speed setting assistance | Speed limit assistance | Speed setting assistance | — | — | Speed setting assistance |
| 1 | Magnetic flux command ④ | Magnetic flux command ④ | Magnetic flux command ④ | Magnetic flux command ④ | Magnetic flux command | Magnetic flux command |
| 2 | Regenerative torque limit (Pr. 810 = 1) | — | Regenerative torque limit (Pr. 810 = 1) | Regenerative torque limit (Pr. 810 = 1) | Regenerative torque limit (Pr. 810 = 1) | — |
| 3 | — | Torque command (Pr. 804 = 0) | — | — | — | Torque command (Pr. 804 = 0) |
| 4 | Torque limit (Pr. 810 = 1) | Torque command (Pr. 804 = 0) | Torque limit (Pr. 810 = 1) | Torque limit (Pr. 810 = 1) | Torque limit (Pr. 810 = 1) | Torque command (Pr. 804 = 0) |
| 5 | — | Forward/reverse rotation speed limit (Pr. 807 = 2) | — | — | — | Forward/reverse rotation speed limit (Pr. 807 = 2) |
| 6 | — | — | Torque bias ④ | — | — | — |
| 9999 | — | — | — | — | — | — |

***Tab. 5-23:*** *Functions of the terminal 1 under different control modes*

● Functions of the terminal 4 under different control modes

| Pr. 858 setting | Speed control/torque control switchover ① | | Speed control/position control switchover ② | | Position control/torque control switchover ③ | |
|---|---|---|---|---|---|---|
| | Speed control (MC signal-OFF) | Torque control (MC signal-ON) | Speed control (MC signal-OFF) | Position control (MC signal-ON) | Position control (MC signal-OFF) | Torque control (MC signal-ON) |
| 0 (initial value) | Speed command (AU signal-ON) | Speed limit (AU signal-ON) | Speed command (AU signal-ON) | — | — | Speed limit (AU signal-ON) |
| 1 | Magnetic flux command ④⑤ | Magnetic flux command ④⑤ | Magnetic flux command ④⑤ | Magnetic flux command ④⑤ | Magnetic flux command ⑤ | Magnetic flux command ⑤ |
| 4 | Torque limit (Pr. 810 = 1) ⑥ | — | Torque limit (Pr. 810 = 1) ⑥ | Torque limit (Pr. 810 = 1) ⑥ | Torque limit (Pr. 810 = 1) ⑥ | — |
| 9999 | — | — | — | — | — | — |

***Tab. 5-24:*** *Functions of the terminal 4 under different control modes*

① Real sensorless vector control (Pr. 800 = "12"), vector control (Pr. 800 = "2")
② Vector control (Pr. 800 = "4"), PM sensorless vector control (Pr. 800 = "14")
③ Vector control (Pr. 800 = "5")
④ Enabled under vector control
⑤ Disabled when Pr. 868="1".
⑥ Disabled when Pr. 868="4".
— : No function

**NOTES**

Switching between the speed control and the torque control is always enabled regardless of the motor status: in a stop, in running, or in DC injection brake (during pre-excitation).

During operation, switching between speed control and position control or between torque control and position control occurs when the output frequency reaches Pr. 865 "Low speed detection" or lower with no position command provided.

Changing the terminal assignment using Pr. 178 to Pr. 189 (input terminal function selection) may affect the other functions. Set parameters after confirming the function of each terminal.

| Parameters referred to | | | |
|---|---|---|---|
| Pr. 178 to Pr. 189 | (input terminal function selection) | => | page 5-409 |
| Pr. 450 | Second applied motor | => | page 5-421 |
| Pr. 804 | Torque command source selection | => | page 5-129 |
| Pr. 807 | Speed limit selection | => | page 5-133 |
| Pr. 810 | Torque limit input method selection | => | page 5-83 |
| Pr. 858 | Terminal 4 function assignment | => | page 5-381 |
| Pr. 868 | Terminal 1 function assignment | => | page 5-381 |

## 5.2.3 Selecting the Advanced magnetic flux vector control Magnetic flux

**NOTE**

To use the Advanced magnetic flux vector control, set the motor capacity, the number of motor poles, and the motor type using Pr. 80 and Pr. 81.

### Advanced magnetic flux vector control

Perform secure wiring. (Refer to page 2-21.)

↓

Make the motor setting. (Pr. 71)

| Motor | | Pr. 71 setting ① | Remarks |
|---|---|---|---|
| Mitsubishi standard motor<br>Mitsubishi high-efficiency motor | SF-JR | 0 (initial value) (3, 4) | |
| | SF-JR 4P 1.5 kW or lower | 20 | |
| | SF-HR | 40 | |
| | Others | 0 (3) | Offline auto tuning is required. ② |
| Mitsubishi constant-torque motor | SF-JRCA 4P | 1 | |
| | SF-HRCA | 50 | |
| | Other (SF-JRC, etc.) | 1 (13) | Offline auto tuning is required.② |
| Mitsubishi high performance energy-saving motor | SF-PR | 70 | |
| Other manufacturer's standard motor | — | 0 (3) | Offline auto tuning is required. ② |
| Other manufacturer's constant-torque motor | — | 1 (13) | Offline auto tuning is required. ② |

① For the other setting values of Pr. 71, refer to page 5-421.
② For offline auto tuning, refer to page 5-426.

↓

Set the motor overheat protection. (Pr. 9) (Refer to page 5-284)

↓ Set the rated motor current (A) in Pr. 9 "Electronic thermal O/L relay".

Setting the motor capacity and the number of motor poles.
(Pr. 80, Pr. 81) (Refer to page 5-55.)

↓ Set the motor capacity (kW) in Pr. 80 "Motor capacity", and set the number of motor poles in Pr. 81 "Number of motor poles".
(V/F control is performed when the setting is "9999" (initial value).)

Set the rated motor voltage and frequency. (Pr. 83, Pr. 84)
(Refer to page 5-66.)

↓ Set the rated motor voltage (V) in Pr. 83 "Rated motor voltage", and set the rated motor frequency (Hz) in Pr. 84 "Rated motor frequency".

Set the operation command. (Refer to page 5-255.)

↓ Select the start command and speed command.

**Test run**

**As required**

- Perform offline auto tuning. (Pr. 96) (Refer to page 5-66.)
- Select the online auto tuning. (Pr. 95) (Refer to page 5-451.)

***Fig. 5-6:*** *Advanced magnetic flux vector control*

**NOTES**

To perform driving in a better accuracy, perform offline auto tuning, then set the online auto tuning, and select Real sensorless vector control.

Under this control, rotations are more likely to be uneven than under V/F control. (This control method is not suitable for grinder, wrapping machine, etc., which require even rotation at a low speed.)

For FR-A820-03160(55K) or lower and FR-A840-01800(55K) or lower, the operation with a surge voltage suppression filter (FR-ASF-H/FR-BMF-H) installed between the inverter and the motor may reduce the output torque.

The optional sine wave filter (MT-BSL/BSC) cannot be used between the inverter and the motor.

Changing the terminal assignment using Pr. 178 to Pr. 189 (input terminal function selection) may affect the other functions. Set parameters after confirming the function of each terminal.

### Keeping the motor speed constant when the load fluctuates (speed control gain)

| Pr. | Name | Initial value | Setting range | Description |
|---|---|---|---|---|
| 89<br>G932 | Speed control gain (Advanced magnetic flux vector) | 9999 | 0 to 200% | Makes adjustments to keep the motor speed constant during variable load operation under Advanced magnetic flux vector control.<br>The reference value is 100%. |
| | | | 9999 | The gain set by Pr. 71. (The gain set in accordance with the motor.) |
| 569<br>G942 | Second motor speed control gain | 9999 | 0 to 200% | Makes adjustments to keep the second motor speed constant during variable load operation under Advanced magnetic flux vector control.<br>The reference value is 100%. |
| | | | 9999 | The gain set by Pr. 450. (The gain set in accordance with the motor.) |

- Use Pr. 89 to keep the motor speed constant during variable load operation.
  (This parameter is useful to make adjustments on the motor speed after replacing a conventional model with an FR-A800 series model.)

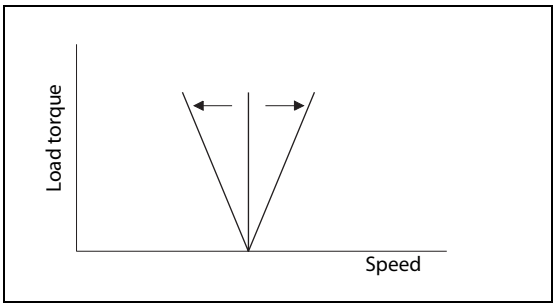


***Fig. 5-7:***
*Adjusting speed fluctuations*

I002504E

**Driving two motors under Advanced magnetic flux vector control**

- Turning ON the Second function selection (RT) signal enables the second motor operation.
- Set a second motor in Pr. 450 "Second applied motor". (In the initial setting, "9999 (no second motor)" is selected. Refer to page 5-421.)

| Function | RT signal ON (second motor) | RT signal OFF (first motor) |
|---|---|---|
| Applied motor | Pr. 450 | Pr. 71 |
| Motor capacity | Pr. 453 | Pr. 80 |
| Number of motor poles | Pr. 454 | Pr. 81 |
| Speed control gain (Advanced magnetic flux vector) | Pr. 569 | Pr. 89 |
| Control method selection | Pr. 451 | Pr. 800 |

***Tab. 5-25:*** *Switching the parameters by using the RT signal*

**NOTES**

The RT signal is a second function selection signal. The RT signal also enables other second functions. (Refer to page 5-415.)
RT signal is assigned to the terminal RT in the initial status. Set "3" in any of Pr. 178 to Pr. 189 (input terminal function selection) to assign the RT signal to another terminal.

Changing the terminal assignment using Pr. 178 to Pr. 189 (input terminal function selection) may affect the other functions. Set parameters after confirming the function of each terminal.

| Parameters referred to | | | |
|---|---|---|---|
| Pr. 71, Pr. 450 | Applied motor | => | page 5-421 |
| Pr. 800, Pr. 451 | Control method selection | => | page 5-55 |

## 5.2.4 Selecting the PM sensorless vector control PM

### Selecting the PM sensorless vector control by performing parameter initialization on the operation panel (1 PM)

**NOTE**

The parameters required to drive an MM-CF IPM motor are automatically changed as a batch. (Refer to page 5-72.)

[PM] on the operation panel (FR-DU08) is on when the PM sensorless vector control is set.

**Example ▽**

Operation example: Initialize the parameter settings for an MM-CF IPM motor by selecting IPM parameter initialization on the operation panel.

| Operation |
|---|
| ① Screen at power-ON<br>The monitor display appears. |
| ② Changing the operation mode<br>Press PU/EXT to choose the PU operation mode.<br>[PU] indicator is lit. |
| ③ Parameter setting mode<br>Press MODE to choose the parameter setting mode.<br>[PRM] indicator is lit. |
| ④ IPM parameter initialization<br>Turn ⊛ until 1 PM (IPM parameter initialization) appears. |
| ⑤ Setting value display<br>Press SET to read the present set value.<br>"0" (initial value) appears. |
| ⑥ Changing the setting value<br>Turn ⊛ to change the set value to "3003", then press SET.<br>"3003" and "1 PM" flicker alternately. The setting is completed. |

***Tab. 5-26:*** *Selecting the PM sensorless vector control by performing parameter initialization*

| Setting | Description |
|---|---|
| 0 | Parameter settings for an induction motor |
| 3003 | Parameter settings for an IPM motor MM-CF (rotations per minute) |

***Tab. 5-27:*** *Settings for the IPM parameter initialization*

**NOTES**

If parameters are initialized for a PM motor in the IPM initialization mode, the Pr. 998 "PM parameter initialization" setting is automatically changed.

In the initial parameter setting, the capacity same as the inverter capacity is set in Pr. 80 "Motor capacity". To use a motor capacity that is one rank lower than the inverter capacity, set Pr. 80 "Motor capacity" by selecting the mode on the operation panel.

To set a speed or to display monitored items in frequency, Pr. 998. (Refer to page 5-70.)

**Initializing the parameters required for the PM sensorless vector control (Pr. 998)**

- PM parameter initialization sets parameters required for driving an IPM motor MM-CF.
- The offline auto tuning enables the operation with an IPM motor other than MM-CF and with SPM motors.
- Two MM-CF IPM parameter initialization methods are available; setting Pr. 998 "PM parameter initialization", and selecting I PM (IPM parameter initialization) mode on the operation panel.

| Pr. | Name | Initial value | Setting range | Description | |
|---|---|---|---|---|---|
| 998<br>E430 | PM parameter initialization | 0 | 0 | Parameter settings for an induction motor (frequency) | The parameter settings required to drive an induction motor are set. |
| | | | 3003 | For IPM motor MM-CF.<br>Parameter setting (rotations per minute) | The parameters settings required to drive an IPM motor are set. |
| | | | 3103 | For IPM motor MM-CF.<br>Parameter setting (frequency) | |
| | | | 8009 | The parameters settings required to drive an IPM motor other than MM-CF are set. (rotations per minute) (after tuning) | The parameters settings required to drive an IPM motor are set.<br>(Set Pr. 71 "Applied motor" and perform offline auto tuning in advance. (Refer to page 5-440.)) |
| | | | 8109 | The parameters settings required to drive an IPM motor other than MM-CF are set. (frequency) (after tuning) | |
| | | | 9009 | The parameters settings required to drive an SPM motor are set. (rotations per minute) (after tuning) | The parameters settings required to drive an SPM motor are set.<br>(Set Pr. 71 "Applied motor" and perform offline auto tuning in advance. (Refer to page 5-440.)) |
| | | | 9109 | The parameters settings required to drive an SPM motor are set.<br>(frequency) (after tuning) | |

- To use a motor capacity that is one rank lower than the inverter capacity, set Pr. 80 "Motor capacity" before performing IPM parameter initialization.
- When Pr. 998 = "3003, 8009, or 9009", the monitor is displayed and the frequency is set using the motor rotations per minute. To use frequency to display or set, set Pr. 998 = "3103, 8109, or 9109".
- Set Pr. 998 = "0" to change the PM sensorless vector control parameter settings to the parameter settings required to drive an induction motor.
- When using an IPM motor other than MM-CF, set Pr. 998 = "8009, 8109, 9009, or 9109". The setting can be made after performing offline auto tuning.

**NOTES**

Make sure to set Pr. 998 before setting other parameters. If the Pr. 998 setting is changed after setting other parameters, some of those parameters will be initialized too. (Refer to "IPM parameter initialization list" for the parameters that are initialized.)

To change back to the parameter settings required to drive an induction motor, perform parameter clear or all parameter clear

If the setting of Pr. 998 "PM parameter initialization" is changed between "3003, 8009, 9009 (rotations per minute)" ⇔ "3103, 8109, 9109 (frequency)", the target parameters are respectively set to their initial values. The purpose of Pr. 998 is not to change the display units. Use Pr. 144 "Speed setting switchover" to change the display units between rotations per minute and frequency. Pr.144 enables switching of display units between rotations per minute and frequency without initializing the parameter settings.

For an inverter out of the capacity range of the IPM motor MM-CF, "3003 or 3103" cannot be set. (Refer to page 8-8 for the capacities of MM-CF motors.)

### IPM parameter initialization list

- The parameter settings in the following table are changed to the settings required to perform PM sensorless vector control by selecting PM sensorless vector control with the IPM parameter initialization mode on the operation panel or with Pr. 998 "PM parameter initialization".
- Performing parameter clear or all parameter clear sets back the parameter settings to the settings required to drive an induction motor.

| Pr. | Name | Pr. 998 | Setting: Induction motor 0 (initial value) FM | Induction motor 0 (initial value) CA | PM motor (rotations per minute) 3003 (MM-CF) | PM motor (rotations per minute) 8009 9009 (other than MM-CF) | PM motor (frequency) 3103 (MM-CF) | PM motor (frequency) 8109 9109 (other than MM-CF) | Setting increments 3003, 8009, 9009 | Setting increments 0, 3103, 8109, 9109 |
|---|---|---|---|---|---|---|---|---|---|---|
| 1 | Maximum frequency | | 120 Hz ① | | 3000 r/min | Maximum motor frequency ⑧ | 200 Hz | Maximum motor frequency ⑧ | 1 r/min | 0.01 Hz |
| | | | 60 Hz ② | | | | | | | |
| 4 | Multi-speed setting (high speed) | | 60 Hz | 50 Hz | 2000 r/min | Pr. 84 | 133.33 Hz | Pr. 84 | 1 r/min | 0.01 Hz |
| 9 | Electronic thermal O/L relay | | Rated inverter current | | Rated motor current (Refer to page 8-8.) | — | Rated motor current (Refer to page 8-8.) | — | 0.01 A ① | |
| | | | | | | | | | 0.1 A ② | |
| 13 | Starting frequency | | 0.5 Hz | | 8 r/min ⑤ | Pr. 84 × 10% | 0.5 Hz ⑥ | Pr. 84 × 10% | 1 r/min | 0.01 Hz |
| 15 | Jog frequency | | 5 Hz | | 200 r/min | Pr. 84 × 10% | 13.33 Hz | Pr. 84 × 10% | 1 r/min | 0.01 Hz |
| 18 | High speed maximum frequency | | 120 Hz ① | | 3000 r/min | — | 200 Hz | — | 1 r/min | 0.01 Hz |
| | | | 60 Hz ② | | | | | | | |
| 20 | Acceleration/deceleration reference frequency | | 60 Hz | 50 Hz | 2000 r/min | Pr. 84 | 133.33 Hz | Pr. 84 | 1 r/min | 0.01 Hz |
| 22 | Stall prevention operation level | | 150% ⑦ | | 150% ⑦ | | | | 0.1% | |
| 37 | Speed display | | 0 | | 0 | | | | 1 | |
| 55 | Frequency monitoring reference | | 60 Hz | 50 Hz | 2000 r/min | Pr. 84 | 133.33 Hz | Pr. 84 | 1 r/min | 0.01 Hz |
| 56 | Current monitoring reference | | Rated inverter current | | Rated motor current (Refer to page 8-8.) | Pr. 859 | Rated motor current (Refer to page 8-8.) | Pr. 859 | 0.01 A ① | |
| | | | | | | | | | 0.1 A ② | |
| 71 | Applied motor | | 0 | | 330 ③ | — | 330 ③ | — | 1 | |
| 80 | Motor capacity | | 9999 | | Motor capacity (MM-CF) ④ | — | Motor capacity (MM-CF) ④ | — | 0.01 kW ① | |
| | | | | | | | | | 0.1 kW ② | |
| 81 | Number of motor poles | | 9999 | | 8 ④ | — | 8 ④ | — | 1 | |
| 84 | Rated motor frequency | | 9999 | | 2000 r/min | — | 133.33 Hz | — | 1 r/min | 0.01 Hz |
| 116 | Third output frequency detection | | 60 Hz | 50 Hz | 2000 r/min | Pr. 84 | 133.33 Hz | Pr. 84 | 1 r/min | 0.01 Hz |
| 125 (903) | Terminal 2 frequency setting gain frequency | | 60 Hz | 50 Hz | 2000 r/min | Pr. 84 | 133.33 Hz | Pr. 84 | 1 r/min | 0.01 Hz |
| 126 (905) | Terminal 4 frequency setting gain frequency | | 60 Hz | 50 Hz | 2000 r/min | Pr. 84 | 133.33 Hz | Pr. 84 | 1 r/min | 0.01 Hz |
| 144 | Speed setting switchover | | 4 | | 108 | Pr. 81 +100 | 8 | Pr. 81 | 1 | |
| 240 | Soft-PWM operation selection | | 1 | | 0 | | | | 1 | |
| 263 | Subtraction starting frequency | | 60 Hz | 50 Hz | 2000 r/min | Pr. 84 | 133.33 Hz | Pr. 84 | 1 r/min | 0.01 Hz |
| 266 | Power failure deceleration time switchover frequency | | 60 Hz | 50 Hz | 2000 r/min | Pr. 84 | 133.33 Hz | Pr. 84 | 1 r/min | 0.01 Hz |
| 374 | Overspeed detection level | | 9999 | | 3150 r/min | Maximum motor frequency +10 Hz ⑧ | 210 Hz | Maximum motor frequency +10 Hz ⑧ | 1 r/min | 0.01 Hz |

***Tab. 5-28:*** *IPM parameter initialization list (1)*

| Pr. | Name | Pr. 998 | Setting: Induction motor: 0 (initial value) FM | Induction motor: 0 (initial value) CA | PM motor (rotations per minute): 3003 (MM-CF) | PM motor (rotations per minute): 8009 9009 (other than MM-CF) | PM motor (frequency): 3103 (MM-CF) | PM motor (frequency): 8109 9109 (other than MM-CF) | Setting increments: 3003, 8009, 9009 | Setting increments: 0, 3103, 8109, 9109 |
|---|---|---|---|---|---|---|---|---|---|---|
| 386 | Frequency for maximum input pulse | | 60 Hz | 50 Hz | 2000 r/min | Pr. 84 | 133.33 Hz | Pr. 84 | 1 r/min | 0.01 Hz |
| 505 | Speed setting reference | | 60 Hz | 50 Hz | 133.33 Hz | Pr. 84 | 133.33 Hz | Pr. 84 | 0.01 Hz | |
| 557 | Current average value monitor signal output reference current | | Rated inverter current | | Rated motor current (Refer to page 8-8.) | Pr. 859 | Rated motor current (Refer to page 8-8.) | Pr. 859 | 0.01 A ① | |
| | | | | | | | | | 0.1 A ② | |
| 820 | Speed control P gain 1 | | 60% | | 30% | | | | 1% | |
| 821 | Speed control integral time 1 | | 0.333 s | | 0.333 s | | | | 0.001 s | |
| 824 | Torque control P gain 1 (current loop proportional gain) | | 100% | | 100% | | | | 1% | |
| 825 | Torque control integral time 1 (current loop integral time) | | 5 ms | | 20 ms | | | | 0.1 ms | |
| 870 | Speed detection hysteresis | | 0 Hz | | 8 r/min | | 0.5 Hz | | 1 r/min | 0.01 Hz |
| 885 | Regeneration avoidance compensation frequency limit value | | 6 Hz | | 200 r/min | Pr. 84 × 10% | 13.33 Hz | Pr. 84 × 10% | 1 r/min | 0.01 Hz |
| 893 | Energy saving monitor reference (motor capacity) | | Rated inverter capacity | | Motor capacity (Pr. 80) | | | | 0.01 kW ① | |
| | | | | | | | | | 0.1 kW ② | |
| C14 (918) | Terminal 1 gain frequency (speed) | | 60 Hz | 50 Hz | 2000 r/min | Pr. 84 | 133.33 Hz | Pr. 84 | 1 r/min | 0.01 Hz |
| 1121 | Per-unit speed control reference frequency | | 120 Hz ① | | | Maximum motor frequency ⑧ | 200 Hz | Maximum motor frequency ⑧ | 1 r/min | 0.01 Hz |
| | | | 60 Hz ② | | | | | | | |

—: Not changed

***Tab. 5-28:*** *IPM parameter initialization list (2)*

① Initial value for the FR-A820-03160(55K) or lower and FR-A840-01800(55K) or lower.

② Initial value for the FR-A820-03800(75K) or higher and FR-A840-02160(75K) and higher.

③ Setting Pr. 71 "Applied motor" = "333, 334, 8093, 8094, 9093, or 9094" does not change the Pr. 71 setting.

④ When a value other than "9999" is set, the set value is not changed.

⑤ 200 r/min when Pr. 788 "Low speed range torque characteristic selection" = "0".

⑥ 13.33 Hz when Pr. 788 "Low speed range torque characteristic selection" = "0".

⑦ 110% for SLD, 120% for LD, 150% for ND, and 200% for HD
(Refer to Pr. 570 "Multiple rating setting" page 5-193.)

⑧ The Pr. 702 "Maximum motor frequency" is used as the maximum motor frequency. When Pr. 702 = "9999 (initial value)", the Pr. 84 "Rated motor frequency" is used as the maximum motor frequency.

**NOTE**

If IPM parameter initialization is performed in rotations per minute (Pr. 998 = "3003, 8009, or 9009"), the parameters not listed in the table and the monitored items are also set and displayed in rotations per minute.

## 5.2.5 Low-speed range torque characteristics PM

The torque characteristics in a low-speed range under PM sensorless vector control can be changed.

| Pr. | Name | Initial value | Setting range | Operation |
|---|---|---|---|---|
| 788<br>G250 | Low speed range torque characteristic selection | 9999 | 0 | Disables the low-speed range torque characteristic (current synchronization operation). |
| | | | 9999 ① | Enables the low-speed range torque characteristic (high frequency superposition control) |
| 747<br>G350 | Second motor low-speed range torque characteristic selection | 9999 | 0 | Disables the low-speed range torque characteristic (current synchronization operation). |
| | | | 9999 ① | Enables the low-speed range torque characteristic (high frequency superposition control) while the RT signal is ON. |

① The low-speed range high-torque characteristic (current synchronization operation) is disabled for PM motors other than MM-CF, even if "9999" is set.

**When the low-speed range torque characteristic is enabled (Pr. 788 = "9999" initial value)**

- The high frequency superposition control provides enough torque in the low-speed range operation.
- The low-speed range high-torque characteristic is only valid with an MM-CF motor.

**When the low-speed range high-torque characteristic is disabled (Pr. 788 = "0")**

- The current synchronization operation reduces much motor noise compared with the high frequency superposition control.
- The torque in a low-speed range is low. Use this setting for an operation with light start-up load.

**Low-speed range high-torque characteristic is set for the second motor (Pr. 747)**

- Use Pr. 747 "Second motor low-speed range torque characteristic selection" to switch the torque characteristic according to the application or to switch among motors connected to one inverter.
- The Pr. 747 becomes valid when the RT signal turns ON.

**NOTES**

Position control under PM sensorless vector control is not available when the current synchronization operation is selected. Zero speed and servo lock are also disabled during current synchronization operation.

For torque characteristics, refer to page 8-9.

RT signal is assigned to the terminal RT in the initial status. Set "3" in any of Pr. 178 to Pr. 189 (input terminal function selection) to assign the RT signal to another terminal.

Changing the terminal assignment using Pr. 178 to Pr. 189 (input terminal function selection) may affect the other functions. Set parameters after confirming the function of each terminal.

| Parameters referred to | | | |
|---|---|---|---|
| Pr. 178 to Pr. 189 | (input terminal function selection) | => | page 5-409 |

# 5.3 Speed control under Real sensorless vector control, vector control, PM sensorless vector control

| Purpose | Parameter to set | | | Refer to page |
|---|---|---|---|---|
| To limit the torque during speed control | Torque limit | P.H500, P.H700 to P.H703, P.H710, P.H720, P.H721, P.H730, P.T010, P.T040, P.G210 | Pr. 22, Pr. 803, Pr. 810, Pr. 812 to Pr. 817, Pr. 858, Pr. 868, Pr. 874 | 5-83 |
| To adjust the gain for speed control | Easy gain tuning<br>Gain adjustment | P.C112 to P.C114, P.G206, P.G211, P.G212, P.G218, P.G260, P.G261, P.G311, P.G312, P.G361 | Pr. 818 to Pr. 821, Pr. 830, Pr. 831, Pr. 880, Pr. 1115 to Pr. 1118, Pr. 1121 | 5-94 |
| To improve the motor trackability for the speed command changes | Speed feed forward control, model adaptive speed control | P.G220 to P.G224, P.G262, P.C114 | Pr. 828, Pr. 877 to Pr. 881, Pr. 1119 | 5-106 |
| To stabilize the speed detection signal | Speed detection filter | P.G215, P.G315 | Pr. 823, Pr. 833 | 5-180 |
| To make starting torque start-up faster | Torque bias | P.G230 to P.G238 | Pr. 840 to Pr. 848 | 5-110 |
| To avoid motor overrunning | Speed deviation excess detection, speed limit, deceleration check | P.H415 to P.H417, P.H881 | Pr. 285, Pr. 853, Pr. 873, Pr. 690 | 5-110 |
| To avoid mechanical resonance | Notch filter | P.G601 to P.G603 | Pr. 1003 to Pr. 1005 | 5-118 |
| To adjust the gain during PM sensorless vector control | Speed control gain adjustment | P.G211, P.G212 | Pr. 820, Pr. 821 | 5-94 |

Speed control performs control so that the speed command and the actual motor rotation speed match.

**Control block diagram**

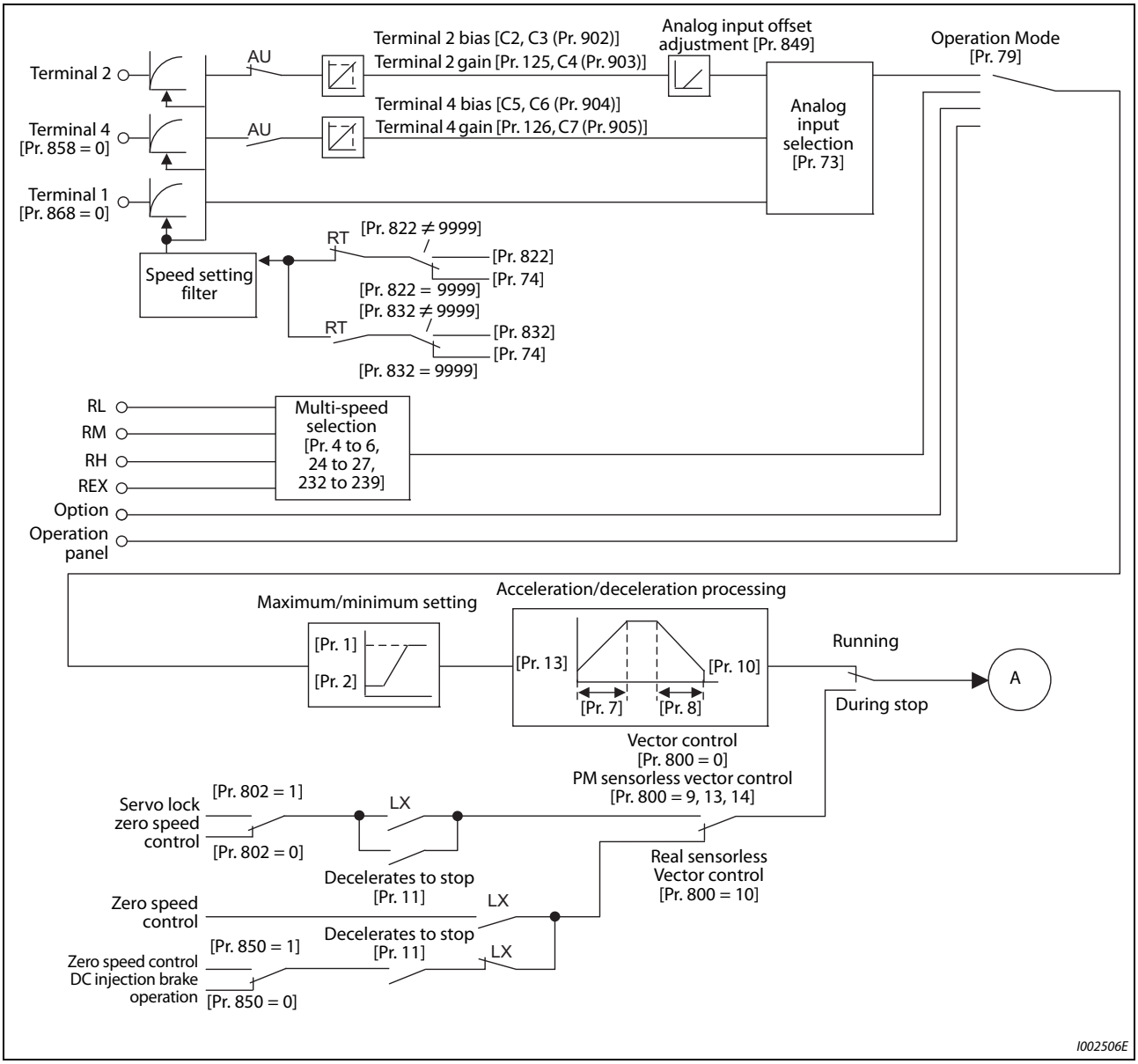


***Fig. 5-8:*** *Control block diagram of speed control under Real sensorless vector control, vector control, PM sensorless vector control*

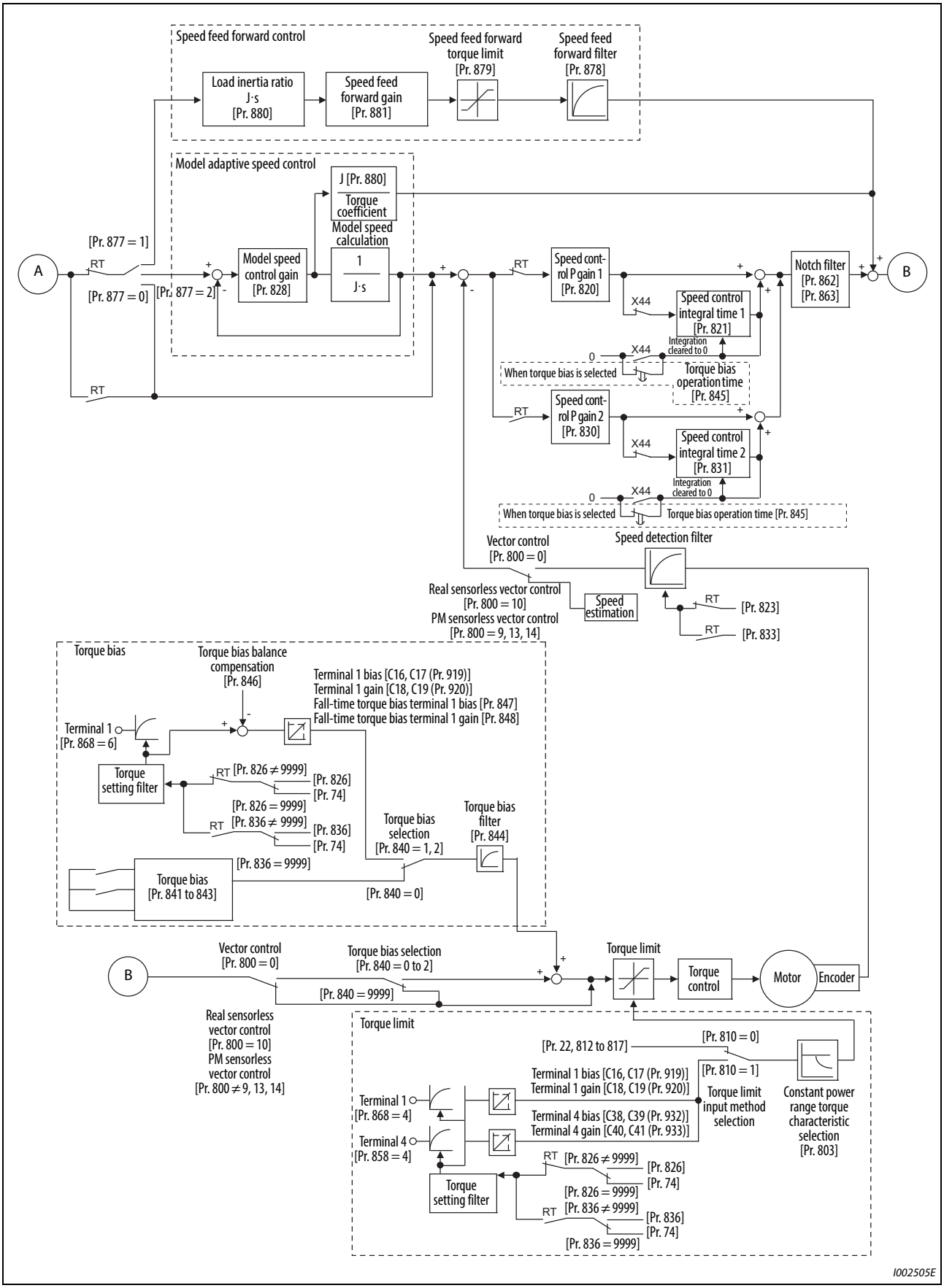


***Fig. 5-9:*** *Control block diagram of speed control under Real sensorless vector control, vector control, PM sensorless vector control*

### 5.3.1 Setting procedure of Real sensorless vector control (speed control) Sensorless

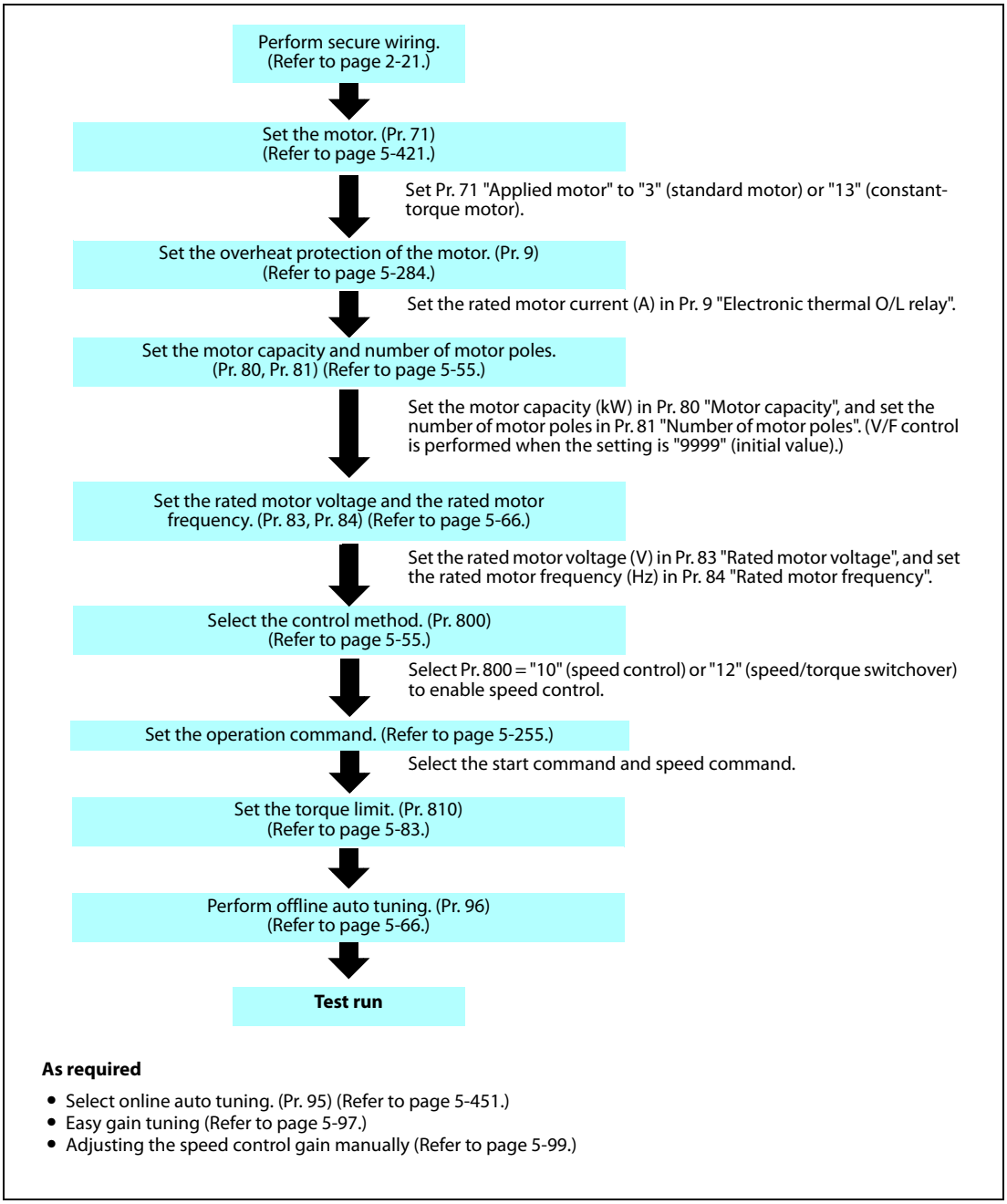


***Fig. 5-10:*** *Setting procedure of Real sensorless vector control (speed control)*

**NOTES**

During Real sensorless vector control, offline auto tuning must be performed properly before starting operations.

The speed command setting range under Real sensorless vector control is 0 to 400 Hz.

The carrier frequency is limited during Real sensorless vector control. (Refer to page 5-211.)

Torque control is not available in a low-speed (about 10 Hz or lower) regenerative range, or with a low speed and light load (about 5 Hz or lower and rated torque about 20% or lower). The vector control must be selected.

Performing pre-excitation (LX signal and X13 signal) under torque control may start the motor running at a low speed even when the start signal (STF or STR) is not input. The motor may run also at a low speed when the speed limit value = 0 with a start command input. It must be confirmed that the motor running will not cause any safety problem before performing pre-excitation.

Switching between the forward rotation command (STF) and reverse rotation command (STR) must not be performed during operations under torque control. An overcurrent trip (E.OC□) or opposite rotation deceleration fault (E.11) will occur.

When performing continuous operations under Real sensorless vector control in FR-A820-00250(3.7K) or lower or FR-A840-00126(3.7K) or lower, the speed fluctuation increases when the value is 20 Hz or less, and in the low-speed range of less than 1 Hz, there may be torque shortage.

If starting may occur while the motor is coasting under Real sensorless vector control, the frequency search must be set for the automatic restart after instantaneous power failure function (Pr. 57 ≠ "9999", Pr. 162 = "10"). (Refer to page 5-540.)

When Real sensorless vector control is applied, not enough torque may be provided in the ultra low-speed range of about 2 Hz or lower.
Generally, the speed control range is as follows.
For power driving, 1:200 (2, 4 or 6 poles) (available at 0.3 Hz or higher when the rating is 60 Hz), 1:30 (8 or 10 poles) (available at 60 Hz or higher when the rating is 60 Hz).
For regenerative driving, 1:12 (2 to 10 poles) (available at 5 Hz or higher when the rating is 60 Hz).

## 5.3.2 Setting procedure of vector control (speed control) Vector

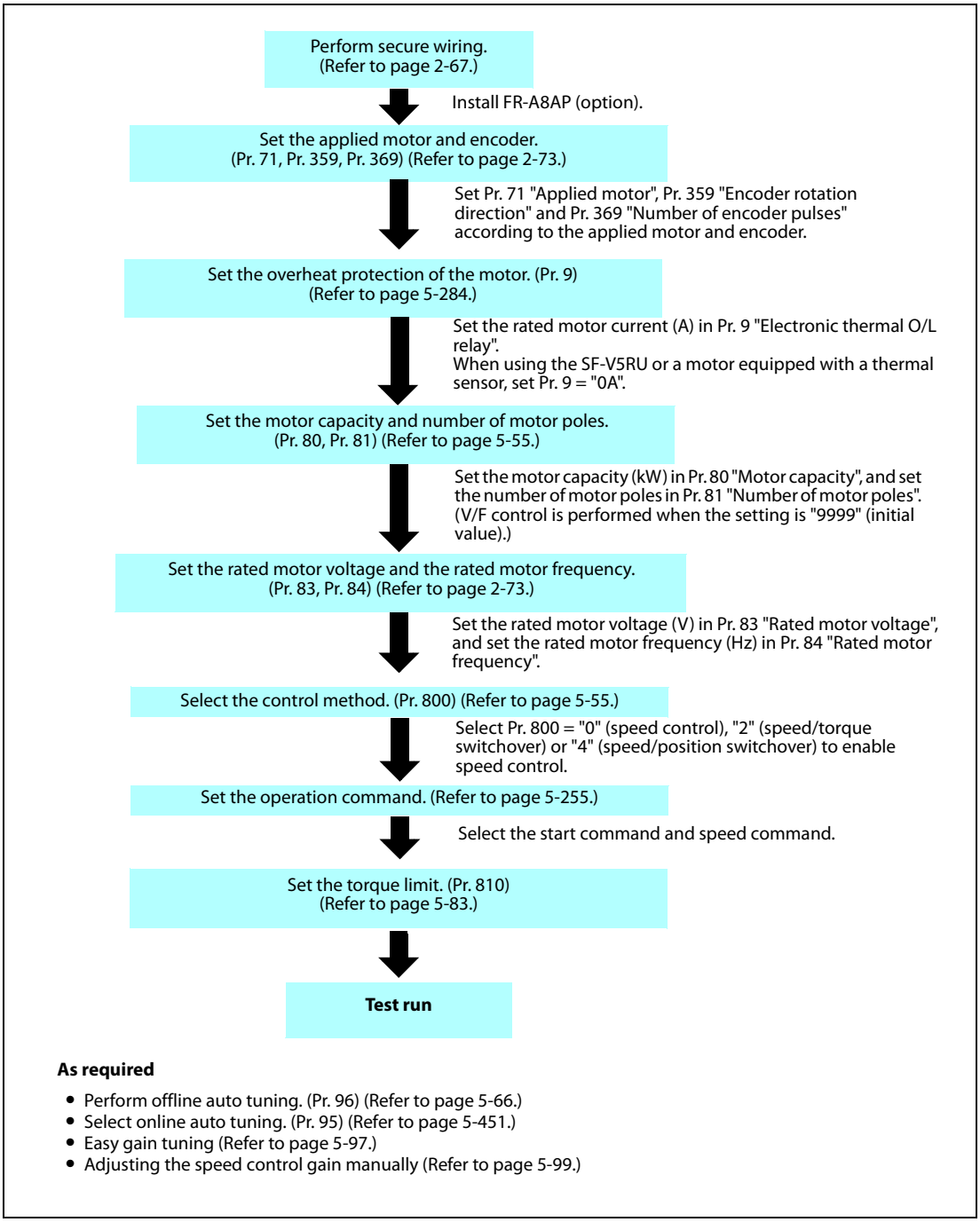


***Fig. 5-11:*** *Setting procedure of vector control (speed control)*

**NOTES**

The speed command setting range under vector control is 0 to 400 Hz.

The carrier frequency is limited during vector control. (Refer to page 5-214.)

## 5.3.3 Setting procedure of PM sensorless vector control (speed control) PM

This inverter is set for a general-purpose motor in the initial setting. Follow the following procedure to change the setting for the PM sensorless vector control.

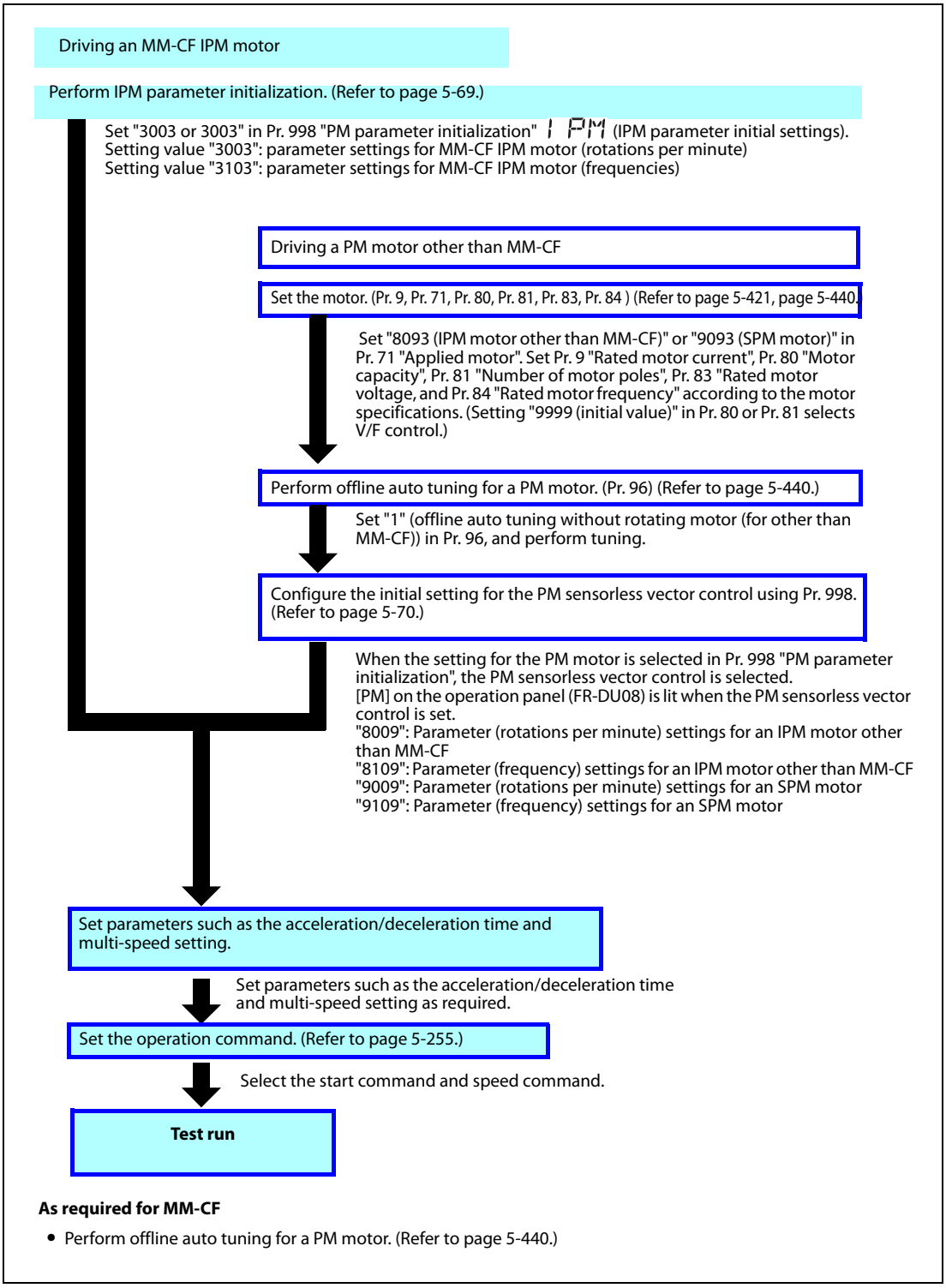


***Fig. 5-12:*** *Setting procedure of PM sensorless vector control (speed control)*

**NOTES**

To change to the PM sensorless vector control, perform PM parameter initialization at first. If parameter initialization is performed after setting other parameters, some of those parameters will be initialized too. (Refer to page 5-72 for the parameters that are initialized.)

To use a motor capacity that is one rank lower than the inverter capacity, set Pr. 80 "Motor capacity" before performing PM parameter initialization.

The speed setting range for an MM-CF IPM motor is between 0 and 200 Hz.

The carrier frequency is limited during PM sensorless vector control. (Refer to page 5-211.)

Constant-speed operation cannot be performed in the low-speed range of 200 r/min or less under current synchronization operation. (Refer to page 5-74.)

During PM sensorless vector control, the RUN signal is output about 100 ms after turning ON the start command (STF, STR). The delay is due to the magnetic pole detection.

During PM sensorless vector control, the automatic restart after instantaneous power failure function operates only when an MM-CF IPM motor is connected.
When a built-in brake or a regeneration unit is used, the frequency search may not be available at 2200 r/min or higher. The restart operation cannot be performed until the motor speed drops to a frequency where the frequency search is available.

## 5.3.4 Setting the torque limit level Sensorless Vector PM

During speed control under Real sensorless vector control, vector control, and PM sensorless vector control, and during position control under vector control and PM sensorless vector control, the output torque is limited to prevent it from exceeding a specified value.
The torque limit level can be set in a range of 0 to 400%. The TL signal can be used to switch between two types of torque limit.
The torque limit level can be selected by setting it with a parameter, or by using analog input terminals (terminals 1, 4). Also, the torque limit levels of forward rotation (power driving/regenerative driving) and reverse rotation (power driving/regenerative driving) can be set individually.

| Pr. | Name | Initial value | Setting range | Description | |
|---|---|---|---|---|---|
| 22<br>H500 | Stall prevention operation level (Torque limit level) | 150/200%<br>① | 0 to 400% | Set the torque limit level in percentage with regards to the rated torque as 100%. | |
| 157<br>M430 | OL signal output timer | 0 s | 0 to 25 s | Set the OL signal output start time at the activation of torque limit operation. | |
| | | | 9999 | No OL signal output | |
| 803<br>G210 | Constant output range torque characteristic selection | 0 | 0 | Torque rise in low-speed range | In constant-power range, constant motor output limit |
| | | | 1 | Constant torque in low-speed range | In constant-power range, constant torque limit |
| | | | 10 | Constant torque in low-speed range | In constant-power range, constant motor output limit |
| | | | 11 | Torque rise in low-speed range | In constant-power range, constant torque limit |
| 810<br>H700 | Torque limit input method selection | 0 | 0 | Internal torque limit<br>(Torque limited by parameter settings.) | |
| | | | 1 | External torque limit<br>(Torque limited by terminals 1 and 4.) | |
| 811<br>D030 | Set resolution switchover | 0 | 0 | Speed setting, running speed monitor increments 1 r/min | Torque limit setting increments 0.1% |
| | | | 1 | Speed setting, running speed monitor increments 0.1 r/min | |
| | | | 10 | Speed setting, running speed monitor increments 1 r/min | Torque limit setting increments 0.01% |
| | | | 11 | Speed setting, running speed monitor increments 0.1 r/min | |
| 812<br>H701 | Torque limit level (regeneration) | 9999 | 0 to 400% | Set the torque limit level for forward rotation regenerative driving. | |
| | | | 9999 | Limit using Pr. 22 or the analog terminal values. | |
| 813<br>H702 | Torque limit level (3rd quadrant) | 9999 | 0 to 400% | Set the torque limit level for reverse rotation power driving. | |
| | | | 9999 | Limit using Pr. 22 or the analog terminal values. | |
| 814<br>H703 | Torque limit level (4th quadrant) | 9999 | 0 to 400% | Set the torque limit level for reverse rotation regenerative driving. | |
| | | | 9999 | Limit using Pr. 22 or the analog terminal values. | |
| 815<br>H710 | Torque limit level 2 | 9999 | 0 to 400% | When the torque limit selection (TL) signal is ON, Pr. 815 is the torque limit value regardless of Pr. 810. | |
| | | | 9999 | The torque limit selected in Pr. 810 is valid. | |
| 816<br>H720 | Torque limit level during acceleration | 9999 | 0 to 400% | Set the torque limit value during acceleration. | |
| | | | 9999 | The same torque limit as constant speed. | |
| 817<br>H721 | Torque limit level during deceleration | 9999 | 0 to 400% | Set the torque limit value during deceleration. | |
| | | | 9999 | The same torque limit as constant speed. | |
| 858<br>T040 | Terminal 4 function assignment | 0 | 0, 4, 9999 | The torque limit level can be changed with setting value "4" and the signal to terminal 4. | |

| Pr. | Name | Initial value | Setting range | Description |
|---|---|---|---|---|
| 868<br>T010 | Terminal 1 function assignment | 0 | 0 to 6, 9999 | The torque limit level can be changed with setting value "4" and the signal to terminal 1. |
| 874<br>H730 | OLT level setting | 150% | 0 to 400% | A trip can be set for when the torque limit is activated and the motor stalls. Set the output at which to activate the trip. |

① When changing from V/F control or Advanced magnetic flux vector control to Real sensorless vector control or vector control in FR-A820-00250(3.7K) or lower or FR-A840-00126(3.7K) or lower, 150% changes to 200%.

**NOTES**

The lower limit for the torque limit level under Real sensorless vector control is set to 30% even if a value lower than 30% is set.

When the low-speed range high-torque characteristic is disabled under PM sensorless vector control (Pr. 788 = "0"), the torque limit is not activated in a low-speed range with a rated frequency of less than 10%.

### Block diagram of torque limit

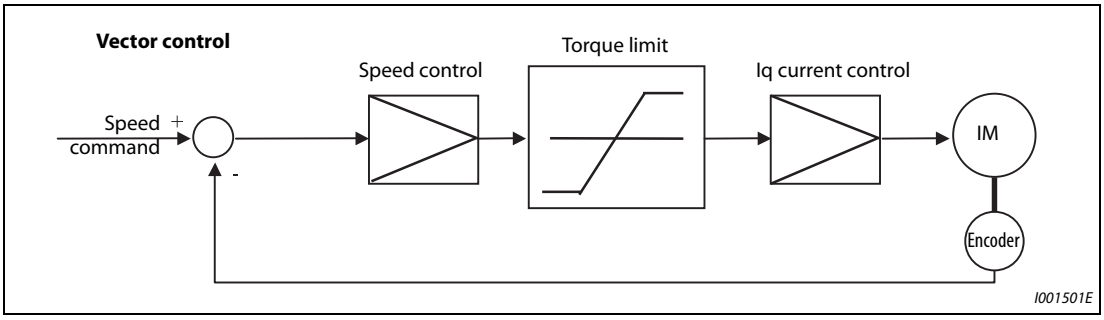


***Fig. 5-13:*** *Torque limit block diagram*

### Selecting the torque limit input method (Pr. 810)

Use Pr. 810 "Torque limit input method selection" to select which method to use to limit the output torque during speed control.

| Pr. 810 setting | Torque limit input method | Operation |
|---|---|---|
| 0 (Initial value) | Internal torque limit | Perform the torque limit operation using the parameter (Pr. 22, Pr. 812 to Pr. 814) settings.<br>If changing the torque limit parameters via communication is enabled, the torque limit input can be performed via communication. |
| 1 | External torque limit | Torque limit using analog voltage (current) to terminal 1 or terminal 4 is valid. |

***Tab. 5-29:*** *Torque limit input*

**Torque limit level using parameter settings (Pr. 810 = "0", Pr. 812 to Pr. 814)**

- In the initial value, a limit is applied to all quadrants with Pr. 22 "Stall prevention operation level (Torque limit level)".
- To set individually for each quadrant, use Pr. 812 "Torque limit level (regeneration)", Pr. 813 "Torque limit level (3rd quadrant)", Pr. 814 "Torque limit level (4th quadrant)". When "9999" is set, Pr. 22 setting is regarded as torque limit level in all the quadrants.

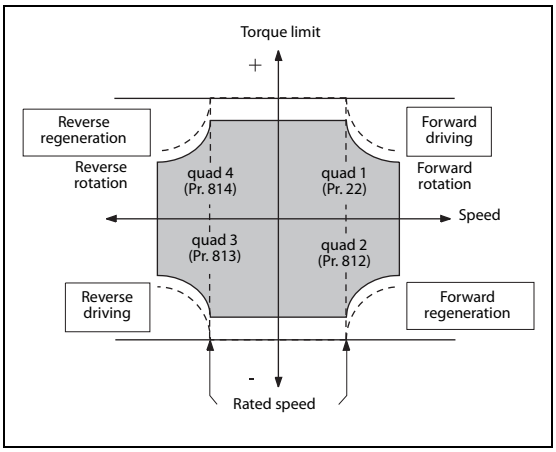


I001502E

***Fig. 5-14:*** *Torque limit level by parameter setting*

**Torque limit level using analog input (terminals 1, 4) (Pr. 810 = "1", Pr. 858, Pr. 868)**

- The torque is limited with the analog input of terminal 1 or terminal 4.
- Torque limit using analog input is valid with a limit value lower than the internal torque limit (Pr. 2, Pr. 812 to Pr. 814). (If the torque limit using analog input exceeds the internal torque limit, the internal torque limit is valid.)
- When inputting the torque limit value from terminal 1, set Pr. 868 "Terminal 1 function assignment" = "4". When inputting from terminal 4, set Terminal 4 function assignment = "4".
- When Pr. 858 = "4" and Pr. 868 = "2", the torque for regenerative driving is limited with the terminal 1 analog input, and the torque for power driving is limited with the terminal 4 analog input.

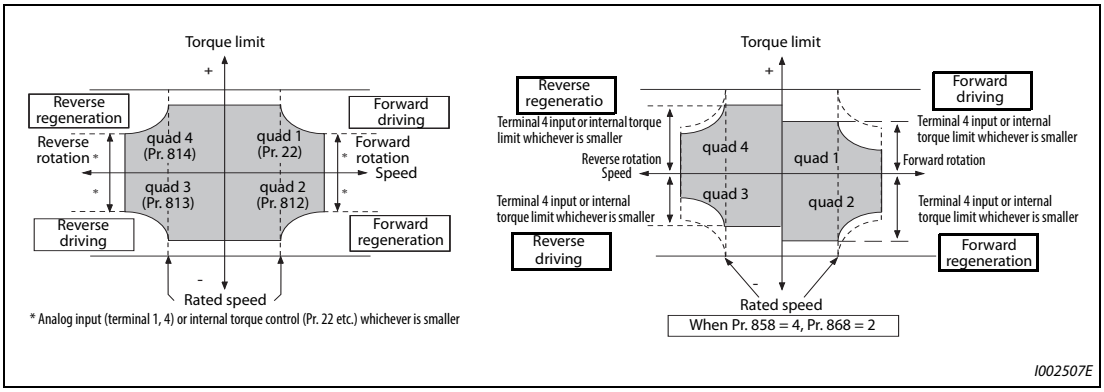


I002507E

***Fig. 5-15:*** *Torque limit level by analog input*

- The torque limit using analog input can be corrected with Calibration parameters C16 (Pr. 919) to C19 (Pr. 920), and C38 (Pr. 932) to C41 (Pr. 933). (Refer to page 5-396.)

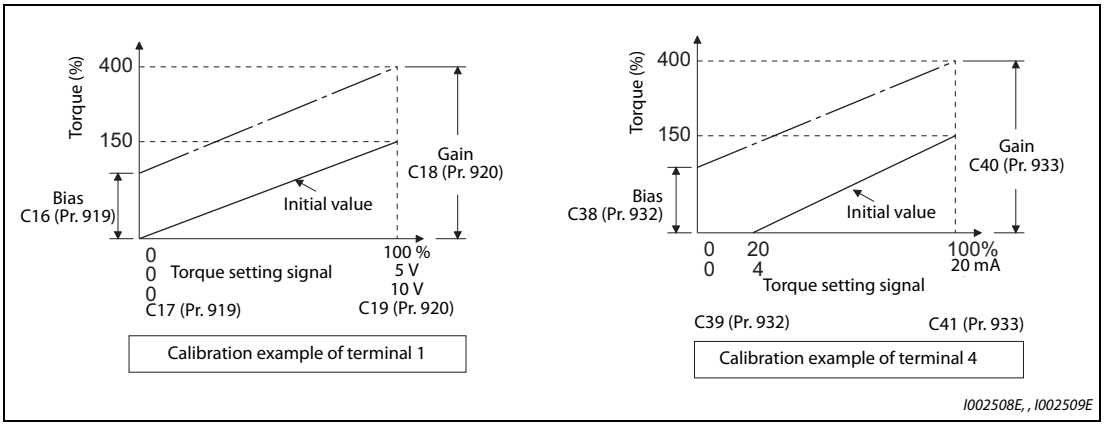


***Fig. 5-16:*** *Correction of the torque limit input with calibration parameters*

**NOTE**

When inputting an analog signal to the terminal 1, input a positive voltage (0 V to +10 V (+5 V)). When a negative voltage (0 V to -10 V (-5 V)) is input, the torque limit value set by the analog signal becomes "0".

● Functions of terminals 1 and 4 by control (— : no function)

| Pr. 858 setting value ① | Terminal 4 function | Pr. 868 setting ② | Terminal 1 function |
|---|---|---|---|
| 0 (Initial value) | Speed command (AU signal-ON) | 0 (Initial value) | Speed setting auxiliary |
| | | 1 ④ | Magnetic flux command ④ |
| | | 2 | — |
| | | 3 | — |
| | | 4 | Torque limit (Pr. 810 = 1) |
| | | 5 | — |
| | | 6 ④ | Torque bias (Pr. 840 = 1 to 3) ④ |
| | | 9999 | — |
| 1 ④ | Magnetic flux command ④ | 0 (Initial value) | Speed setting auxiliary |
| | — ③ | 1 ④ | Magnetic flux command ④ |
| | Magnetic flux command ④ | 2 | — |
| | | 3 | — |
| | | 4 | Torque limit (Pr. 810 = 1) |
| | | 5 | — |
| | | 6 ④ | Torque bias (Pr. 840 = 1 t o 3) ④ |
| | | 9999 | — |
| 4 ② | Torque limit (Pr. 810 =1) | 0 (Initial value) | Speed setting auxiliary |
| | | 1 ④ | Magnetic flux command ④ |
| | Power driving torque limit (Pr. 810 = 1) | 2 | Regenerative driving torque limit (Pr. 810 = 1) |
| | Torque limit (Pr. 810 = 1) | 3 | — |
| | — ③ | 4 | Torque limit (Pr. 810 = 1) |
| | Torque limit (Pr. 810 = 1) | 5 | — |
| | | 6 ④ | Torque bias (Pr. 840 = 1 to 3) ④ |
| | | 9999 | — |
| 9999 | — | — | — |

***Tab. 5-30:*** *Terminal 1, 4 function according to control*

① When Pr. 868 ≠ "0", the other functions of terminal 1 (auxiliary input, override function, PID control) do not operate.

② When Pr. 858 ≠ "0", PID control and speed commands using terminal 4 do not operate even when the AU signal is ON.

③ When both Pr. 858 and Pr. 868 are "1" (magnetic flux command) or "4" (torque limit), the function of terminal 1 has higher priority, and terminal 4 does not function.

④ Valid when FR-A8AP (option) is installed and vector control is selected.

**Second torque limit level (TL signal, Pr. 815)**

- For Pr. 815 "Torque limit level 2", when the Torque limit selection (TL) signal is ON, the setting value of Pr. 815 is the limit value regardless of the setting of Pr. 810 "Torque limit input method selection".
- To assign the TL signal, set "27" in any of Pr. 178 to Pr. 189 (input terminal function selection).

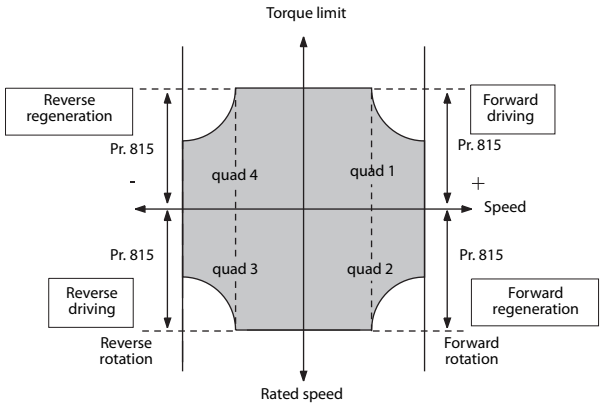


***Fig. 5-17:*** *Second torque limit level*

**NOTE**

Changing the terminal assignment using Pr. 178 to Pr. 189 (input terminal function selection) may affect the other functions. Set parameters after confirming the function of each terminal.

**Setting the torque limit values during acceleration/deceleration individually (Pr. 816, Pr. 817)**

- The torque limit during acceleration and deceleration can be set individually.
  Torque limit using the setting values of Pr. 816 "Torque limit level during acceleration" and Pr. 17 "Torque limit level during deceleration" is shown below.
- If 1 s elapses while the difference between the set speed and rotation speed is within ±2 Hz, the torque limit level during acceleration/deceleration (Pr. 816 or Pr. 817) changes to the torque control level during constant speed (Pr. 22).
- When the difference between the set speed and rotation speed is –2 Hz or less, the torque limit level during deceleration (Pr. 817) activates.

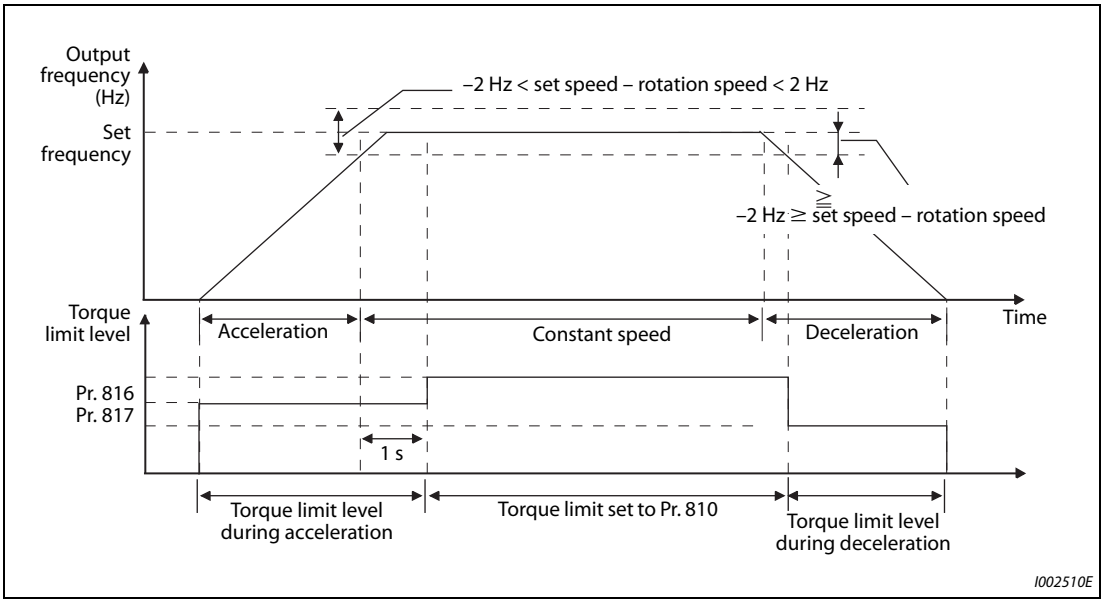


***Fig. 5-18:*** *Individual torque limit value during acceleration and deceleration*

**NOTE** The Pr. 816 and Pr. 817 settings are invalid under position control.

### Changing the setting increments of the torque limit level (Pr. 811)

- The setting increments of Pr. 22 "Torque limit level" and Pr. 812 to Pr. 817 (torque limit level) can be changed to 0.01% by setting Pr. 811 "Set resolution switchover" = "10, 11".

| Pr. 811 setting | Speed setting, running speed monitor increments from PU, RS-485 communication, communication options ① | Torque limit setting increments Pr. 22, Pr. 812 to Pr. 817 |
|---|---|---|
| 0 | 1 r/min | 0.1% |
| 1 | 0.1 r/min | |
| 10 | 1 r/min | 0.01% |
| 11 | 0.1 r/min | |

***Tab. 5-31:*** *Torque limit level increments*

① For the change of the speed setting increments using a communication option, refer to the Instruction Manual of the communication option.

**NOTES**

The internal resolution of the torque limit is 0.024% ($100/2^{12}$), and fractions below this resolution are rounded off.

When Real sensorless vector control is selected, fractions below a resolution equivalent to 0.1% are rounded off even if Pr. 811 = "10, 11" is set.

For details on changing the speed setting increments, refer to page 5-314.

### Changing the torque characteristic of the constant-output range (Pr. 803)

In torque limit operations under Real sensorless vector control or vector control, the torque characteristic in a low-speed range and constant-output range can be changed.

| Pr. 803 setting | Torque characteristic in low-speed range | Torque characteristic in constant-output range |
|---|---|---|
| 0 | Torque rise ① | Constant motor output |
| 1 | Constant torque | Constant torque |
| 10 | Constant torque | Constant motor output |
| 11 | Torque rise ① | Constant torque |

***Tab. 5-32:*** *Torque characteristic in a low-speed range and constant-output range*

① Valid only under Real sensorless vector control.

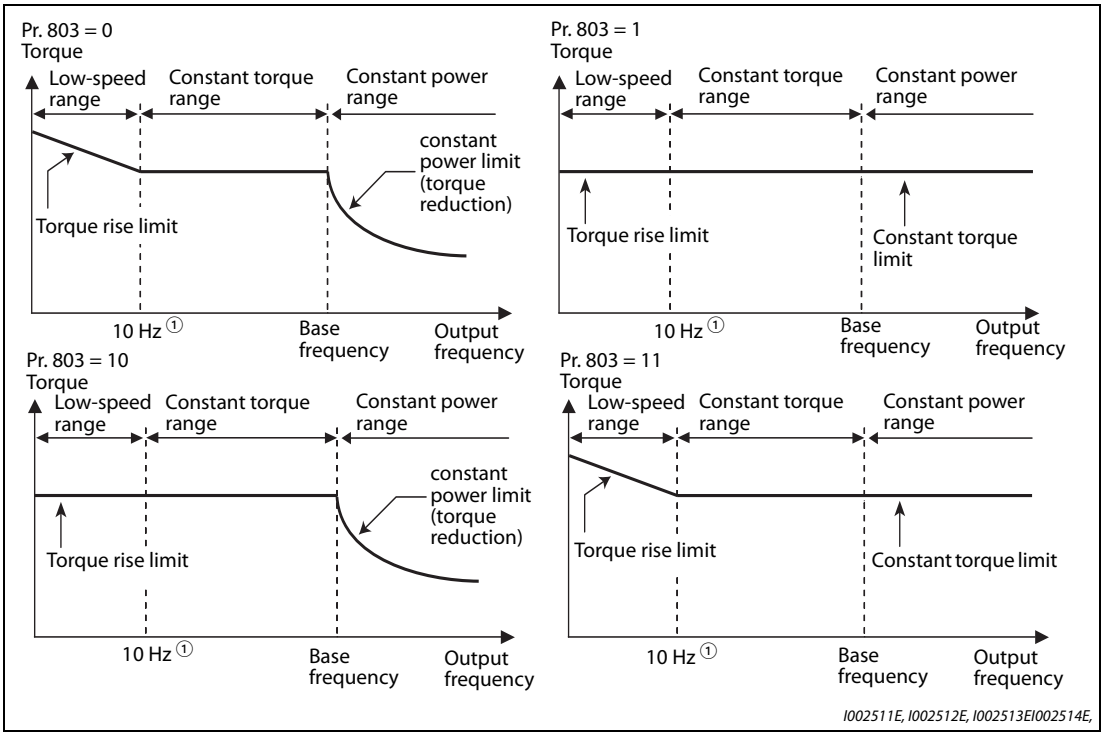


***Fig. 5-19:*** *Torque characteristic in a low-speed range and constant-output range*

① Differs by the motor. (30 Hz for the SF-HR/SF-HRCA 3.7 kW to 7.5 kW, 18.5 kW, and 22 kW. 20 Hz for the 30 kW to 55 kW.)

**Trip during torque limit operation (Pr. 874)**

- A trip can be set for when the torque limit is activated and the motor stalls.
- When a high load is applied and the torque limit is activated under speed control or position control, the motor stalls. At this time, if a state where the rotation speed is lower than the value set in Pr. 865 "Low speed detection" and the output torque exceeds the level set in Pr. 874 "OLT level setting" continues for 3 s, Stall prevention stop (E.OLT) is activated and the inverter output is shut off.

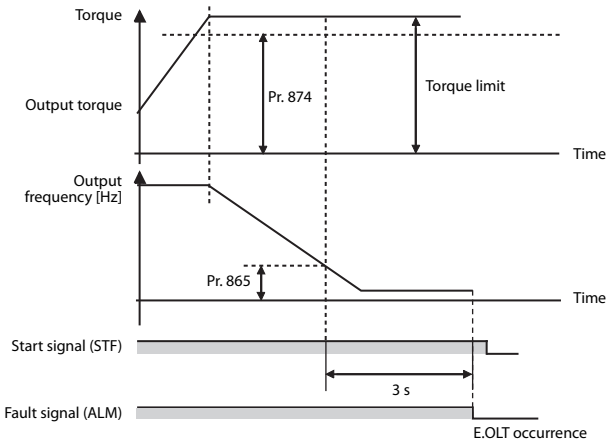


***Fig. 5-20:*** *Alarm stop when torque limit is activated*

**NOTES**

Under V/F control or Advanced magnetic flux vector control, if the output frequency drops to 0.5 Hz due to the stall prevention operation and this state continues for 3 s, a fault indication (E.OLT) appears, and the inverter output is shut off. This operation is activated regardless of the Pr. 874 setting.

This fault does not occur under the torque control.

**Adjusting the stall prevention operation signal and output timing (OL signal, Pr. 157)**

- If the output torque exceeds the torque limit level and the torque limit is activated, the stall prevention operation signal (OL signal) is turned ON for 100 ms or longer. When the output torque drops to the torque limit level or lower, the output signal also turns OFF.
- Pr. 157 "OL signal output timer" can be used to set whether to output the OL signal immediately, or whether to output it after a certain time period has elapsed.

| Pr. 157 setting | Description |
|---|---|
| 0 (Initial value) | Output immediately. |
| 0.1 to 25 | Output after the set time (s). |
| 9999 | Not output. |

***Tab. 5-33:*** *Setting of parameter 157*

- The OL signal is also output during the regeneration avoidance operation oL (overvoltage stall).

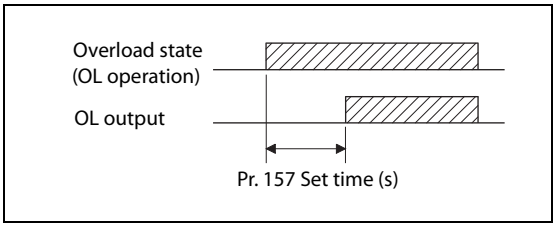


***Fig. 5-21:***
*Output of the OL signal*

**NOTES**

OL signal is assigned to the terminal OL in the initial setting. The OL signal can also be assigned to other terminals by setting "3 (positive logic) or 103 (negative logic)" in any of Pr. 190 to Pr. 196 (output terminal function selection).

Changing the terminal assignment using Pr. 190 to Pr. 196 (output terminal function selection) may affect the other functions. Set parameters after confirming the function of each terminal.

| **Parameters referred to** | | | |
|---|---|---|---|
| Pr. 22 | Stall prevention operation level | => | page 5-83 |
| Pr. 178 to Pr. 189 | (input terminal function selection) | => | page 5-409 |
| Pr. 190 to Pr. 196 | (output terminal function selection) | => | page 5-350 |
| Pr. 840 | Torque bias selection | => | page 5-110 |
| Pr. 865 | Low speed detection | => | page 5-361 |

## 5.3.5 Performing high-accuracy, fast-response control (gain adjustment for Real sensorless vector control, vector control and PM sensorless vector control)

Sensorless Vector PM

The load inertia ratio (load moment of inertia) for the motor is calculated in real time from the torque command and rotation speed during motor driving by the vector control. Because the optimum gain for speed control and position control is set automatically from the load inertia ratio and the response level, the work required for gain adjustment is reduced. (Easy gain tuning)

If the load inertia ratio cannot be calculated due to load fluctuations, or under Real sensorless vector control or PM sensorless vector control, the control gain can be set automatically by entering the load inertia ratio manually.

Manual gain adjustment is useful for achieving optimum machine performance or improving unfavorable conditions, such as vibration and acoustic noise during operation with high load inertia or gear backlash.

| Pr. | Name | Initial value | Setting range | Description |
|---|---|---|---|---|
| 818<br>C112 | Easy gain tuning response level setting | 2 | 1 to 15 | Set the response level.<br>1 (slow-response) to 15 (fast-response) |
| 819<br>C113 | Easy gain tuning selection | 0 | 0 | No easy gain tuning |
| | | | 1 | Gain is calculated with load calculation<br>(This function is valid under vector control.) |
| | | | 2 | Gain is calculated with load (Pr. 880) manual input |
| 820<br>G211 | Speed control P gain 1 | 60% | 0 to 1000% | The proportional gain during speed control is set. (Setting this parameter higher improves the trackability for speed command changes. It also reduces the speed fluctuation caused by external disturbance.) |
| 821<br>G212 | Speed control integral time 1 | 0.333 s | 0 to 20 s | The integral time during speed control is set. (Setting this parameter lower shortens the return time to the original speed when the speed fluctuates due to external disturbance.) |
| 830<br>G311 | Speed control P gain 2 | 9999 | 0 to 1000% | Second function of Pr. 820 (valid when RT signal is ON) |
| | | | 9999 | The Pr. 820 setting is applied to the operation. |
| 831<br>G312 | Speed control integral time 2 | 9999 | 0 to 20 s | Second function of Pr. 821 (valid when RT signal is ON) |
| | | | 9999 | The Pr. 821 setting is applied to the operation. |
| 880<br>C114 | Load inertia ratio | 7-fold | 0 to 200-fold | Set the load inertia ratio for the motor. |
| 1115<br>G218 | Speed control integral term clear time | 0 ms | 0 to 9998 ms | Set time until the integral term is reduced and cleared after P control switching. |
| 1116<br>G206 | Constant output range speed control P gain compensation | 0% | 0 to 100% | Set a compensation amount of the speed control P gain in the constant output range (rated speed or higher). |
| 1117<br>G261 | Speed control P gain 1 (per-unit system) | 9999 | 0 to 300 | Set a proportional gain under speed control in the per-unit system. |
| | | | 9999 | The Pr. 820 setting is applied to the operation. |
| 1118<br>G361 | Speed control P gain 2 (per-unit system) | 9999 | 0 to 300 | Second function of Pr. 1117 (valid when RT signal ON) |
| | | | 9999 | The Pr. 1117 setting is applied to the operation. |
| 1121<br>G260 | Per-unit speed control reference frequency | 120 Hz ① | 0 to 400 Hz | Set the speed at 100% when setting speed control P gain or model speed control gain in the per-unit system. |
| | | 60 Hz ② | | |

① The value for the FR-A820-03160(55K) or lower and FR-A840-01800(55K) or lower.

② The value for the FR-A820-03800(75K) or higher and FR-A840-02160(75K) or higher.

**Block diagram of easy gain tuning function**

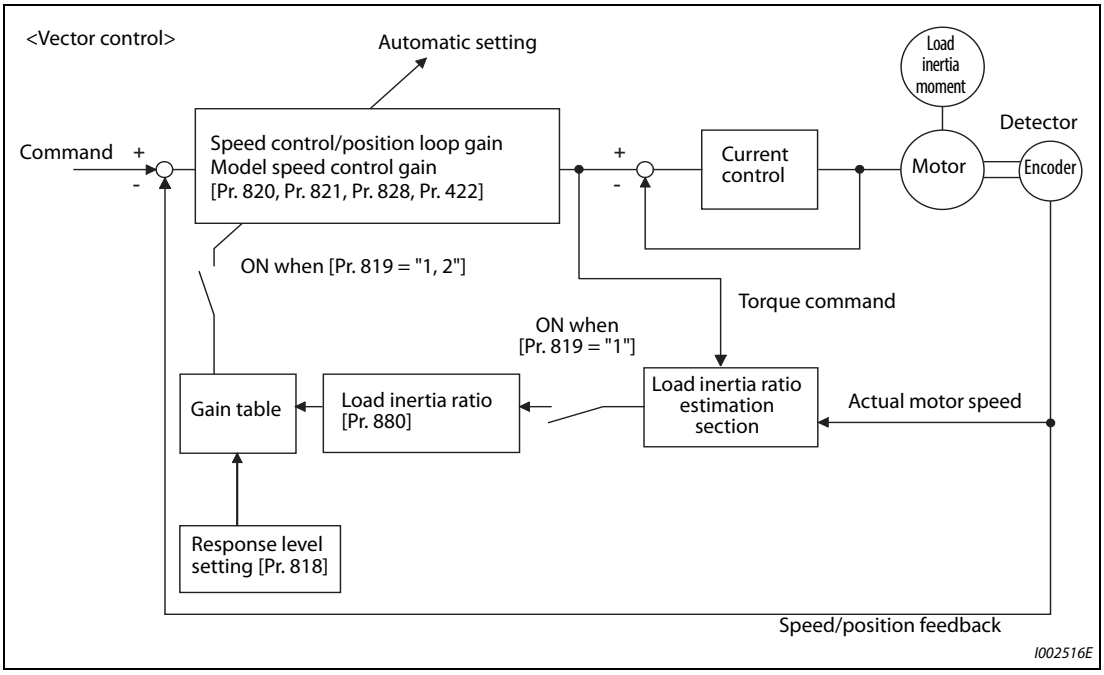


***Fig. 5-22:*** *Block diagram of easy gain tuning function*

**NOTE** Easy gain tuning is valid for the first motor. When applying the second motor (RT signal is ON), tuning is not performed.

**Execution procedure for easy gain tuning (Pr. 819 = "1" Load inertia ratio automatic calculation)**

Easy gain tuning (load inertia ratio automatic calculation) is only valid in the speed control and position control modes of vector control. It is invalid under torque control, V/F control, Advanced magnetic flux vector control, Real sensorless vector control, and PM sensorless vector control.

① Set the response level in Pr. 818 "Easy gain tuning response level setting".
Increasing the value will improve trackability to the command, but too high value will generate vibration. The following figure shows the relationship between the setting and the response level.

| Pr. 818 setting | 1 | 2 | 3 | 4 | 5 | 6 | 7 | 8 | 9 | 10 | 11 | 12 | 13 | 14 | 15 |
|---|---|---|---|---|---|---|---|---|---|---|---|---|---|---|---|
| Response level | Slow response | | ◄ | | | ► | | Middle response | | ◄ | | | ► | | Fast response |
| Guideline of mechanical resonance frequency [Hz] | 8 | 10 | 12 | 15 | 18 | 22 | 28 | 34 | 42 | 52 | 64 | 79 | 98 | 122 | 150 |
| Inverter application | 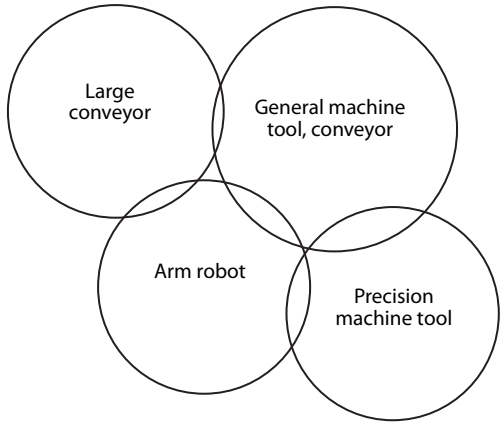  I001482E | | | | | | | | | | | | | | |

***Tab. 5-34:*** *Response level setting*

② The load inertia ratio is calculated during acceleration/deceleration, and the gain for each control is set automatically from this value and the value of Pr. 818 "Easy gain tuning response level setting". Pr. 880 "Load inertia ratio" is used as the initial value of the load inertia ratio when performing tuning. During tuning, the calculated value is set in Pr. 880.
The calculation of the load inertia ratio may take excessive time or otherwise not be performed properly if the following conditions are not satisfied.

- The time in acceleration/deceleration driving until 1500 r/min is reached in 5 s or less.
- The rotation speed in driving is 150 r/min or higher.
- The acceleration/deceleration torque is 10 % or higher.
- No sudden external disturbances during acceleration/deceleration.
- The load inertia ratio is about 30-fold or lower.
- No gear backlash or belt sagging.

③ Press FWD or REV key to calculate the continuous load inertia ratio, or calculate the gain.
(The operation command during External operation is the STF or STR signal.)

**Execution procedure for easy gain tuning (Pr. 819 = "2" Load inertia ratio manual input)**

Easy gain tuning (load inertia ratio manual input) is valid in the speed control mode under Real sensorless vector control, the speed control and position control modes under vector control, and the speed control mode under PM sensorless vector control.

① Set the load inertia ratio for the motor in Pr. 880 "Load inertia ratio".

② Set "2" (easy gain tuning enabled) in Pr. 819 "Easy gain tuning selection". When set, Pr. 820 "Speed control P gain 1" and Pr. 821 "Speed control integral time 1" are set automatically.
Operation is performed with the adjusted gain from the next operation.

③ Perform a test run, and set the response level in Pr. 818 "Easy gain tuning response level setting". Setting this parameter higher improves the trackability for commands, but setting it too high causes vibration. (The response level can be adjusted during operation when Pr. 77 "Parameter write selection" = "2" (parameters can be written during operation).)

**NOTES**

When Pr. 819 = "1, 2" is set, even if the Pr. 819 setting value is returned to "0" after tuning is performed, the data that was set in each parameter is retained in the tuning results.

If good precision cannot be obtained even after executing easy gain tuning, because of external disturbances or other reasons, perform fine adjustment manually. At this time, set the setting value of Pr. 819 to "0" (no easy gain tuning).

### Parameters set automatically by easy gain tuning

The following table shows the relationship between the easy gain tuning function and gain adjustment parameters.

| | Easy gain tuning selection (Pr. 819) setting | | |
|---|---|---|---|
| | **0** | **1** | **2** |
| Pr. 880 Load inertia ratio | Manual input | a) The inertia calculation result (RAM) using easy gain tuning is displayed.<br>b) The parameter is set at the following times.<br>• Every hour after turning ON the power<br>• When Pr. 819 is set to a value other than "1"<br>• After changing to a control other than vector control (such as V/F control) using Pr. 800<br>c) Write (manual input) is available only during a stop. | Manual input |
| Pr. 820 Speed control P gain 1<br>Pr. 821 Speed control integral time 1<br>Pr. 828 Model speed control gain<br>Pr. 422 Position control gain<br>Pr. 446 Model position control gain | Manual input | a) The tuning result (RAM) is displayed.<br>b) The parameter is set at the following times.<br>Every hour after turning ON the power<br>• When Pr. 819 is set to a value other than "1"<br>• After changing to a control other than vector control (such as V/F control) using Pr. 800<br>c) Write (manual input) is not available | a) Gain is calculated when Pr. 819 is set to "2", and the result is set in the parameter.<br>b) When read, the tuning result (parameter setting value) is displayed.<br>c) Write (manual input) is not available |

***Tab. 5-35:*** *Automatically set parameters by easy gain tuning*

**NOTES**

If easy gain tuning is executed at an inertia equal to or higher than the specified value under vector control, a fault such as hunting may occur. Also, if the motor shaft is fixed by the servo lock or position control, the bearing may be damaged. In this case, do not perform easy gain tuning. Adjust the gain manually.

The load inertia ratio is only calculated under vector control.

**Adjusting the speed control gain manually (Pr. 819 = "0" No easy gain tuning)**

- The speed control gain can be adjusted for the conditions such as abnormal machine vibration, acoustic noise, slow response, and overshoot.
- Pr. 820 "Speed control P gain 1" = "60 % (initial value)" is equivalent to 120 rad/s (speed response of a single motor). (Equivalent to the half the rad/s value during Real sensorless vector control or with the FR-A820-03800(75K) or higher and FR-A840-02160(75K) or higher during vector control.) Setting this parameter higher speeds up the response, but setting this too high causes vibration and acoustic noise.
- Setting Pr. 821 "Speed control integral time 1" lower shortens the return time to the original speed during speed fluctuation, but setting it too low causes overshoot.

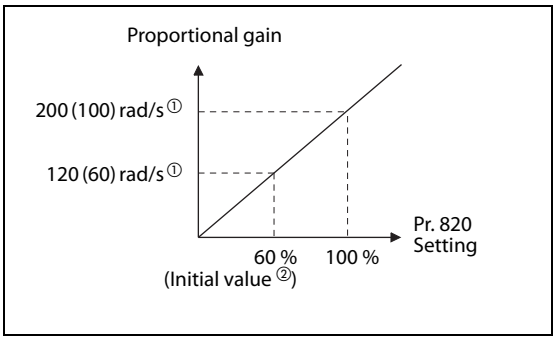


***Fig. 5-23:*** *Setting of the proportional gain*

① The value in parentheses is applicable during Real sensorless vector control or with the FR-A820-03800(75K) or higher and FR-A840-02160(75K) or higher during vector control.

② Performing PM parameter initialization changes the settings. (Refer to page 5-70.)

- Actual speed gain is calculated as below when load inertia is applied.

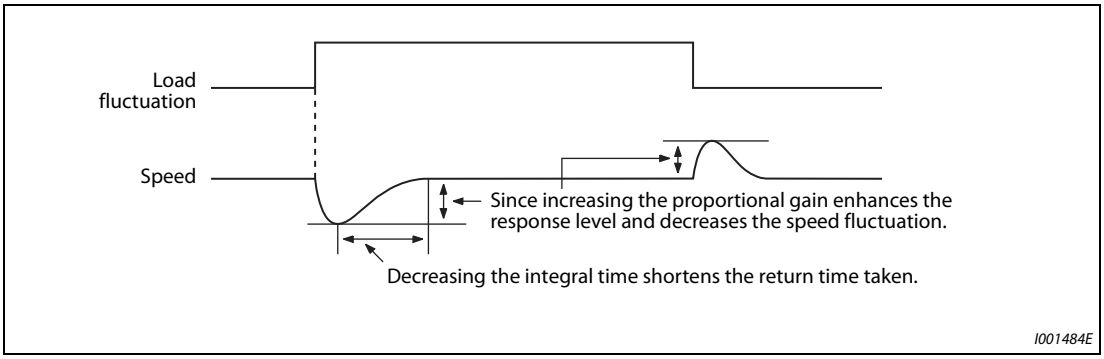


***Fig. 5-24:*** *Speed characteristic at load fluctuation*

$$\text{Actual speed gain} = \text{Speed gain of a single motor} \times \frac{JM}{JM + JL}$$

JM: Motor inertia
JL: Load inertia converted as the motor axis inertia

- Adjust in the following procedure:

  ① Change the Pr. 820 setting while checking the conditions.

  ② If it cannot be adjusted well, change Pr. 821 setting, and perform ① again.

| No. | Movement / condition | Adjustment method | |
|---|---|---|---|
| 1 | Load inertia is high. | Set Pr. 820 and Pr. 821 higher. | |
| | | Pr. 820 | If acceleration is slow, raise the setting by 10%s and set a value that satisfies the following condition:<br>The setting immediately before vibration/noise starts occurring × 0.8 to 0.9. |
| | | Pr. 821 | If overshoots occur, raise the setting by double the setting and set a value that satisfies the following condition:<br>The setting where overshoots stop occurring × 0.8 to 0.9. |
| 2 | Vibration or acoustic noise are generated from machines. | Set Pr. 820 lower and Pr. 821 higher. | |
| | | Pr. 820 | Lower the setting by 10%s and set a value that satisfies the following condition:<br>The setting immediately before vibration/noise starts occurring × 0.8 to 0.9. |
| | | Pr. 821 | If overshoots occur, raise the setting by double the setting and set a value that satisfies the following condition:<br>The setting where overshoots stop occurring × 0.8 to 0.9. |
| 3 | Response is slow. | Set Pr. 820 higher. | |
| | | Pr. 820 | If acceleration is slow, raise the setting by 5%s and set a value that satisfies the following condition:<br>The setting immediately before vibration/noise starts occurring × 0.8 to 0.9. |
| 4 | Return time (response time) is long. | Set Pr. 821 lower. | |
| | | Lower Pr. 821 by half the current setting and set a value that satisfies the following condition:<br>The setting immediately before overshoots or unstable movements stop occurring × 0.8 to 0.9 | |
| 5 | Overshoots or unstable movements occur. | Set Pr. 821 higher. | |
| | | Raise Pr. 821 by double the current setting and set a value that satisfies the following condition:<br>The setting immediately before overshoots or unstable movements stop occurring × 0.8 to 0.9 | |

***Tab. 5-36:*** *Adjustment procedures for parameter 820 and 821*

**NOTES**

When adjusting the gain manually, set Pr. 819 "Easy gain tuning selection" to "0" (no easy gain tuning) (initial value).

Pr. 830 "Speed control P gain 2" and Pr. 831 "Speed control integral time 2" are valid when terminal RT is ON. In this case, replace them for Pr. 820 and Pr. 821 in the description above.

**When using a multi-pole motor (8 poles or more)**

- If the motor inertia is known, set Pr. 707 "Motor inertia (integer)" and Pr. 724 "Motor inertia (exponent)". (Refer to page 5-66.)
- Under Real sensorless vector control or vector control, adjust Pr. 820 "Speed control P gain 1" and Pr. 824 "Torque control P gain 1 (current loop proportional gain)" to suit the motor, by referring to the following methods.
- Setting the parameter of Pr. 820 "Speed control P gain 1" higher speeds up the response, but setting this too high causes vibration and acoustic noise.
- Setting the parameter of Pr. 824 "Torque control P gain 1 (current loop proportional gain)" too low causes current ripple, and a noise synchronous with this will be emitted from the motor.
- Adjustment method:

| No. | Movement / condition | Adjustment method |
|---|---|---|
| 1 | Motor rotation speed in the low-speed range is unstable. | Pr. 820 "Speed control P gain 1" must be set higher according to the motor inertia. For multi-pole motors, because the inertia of the motor itself tends to be large, first perform broad adjustment to improve the unstable movements, and then perform fine adjustment by referring to the response level based on this setting. Also, for vector control, gain adjustment appropriate for the inertia can be easily performed by using easy gain tuning (Pr. 819 = 1). |
| 2 | Rotation speed trackability is poor. | Set Pr. 820 "Speed control P gain 1" higher. Raise the setting by 10%s and set a value that satisfies the following condition:<br>The setting immediately before vibration/noise starts occurring × 0.8 to 0.9.<br>If it cannot be adjusted well, double Pr. 821"Speed control integral time 1" and perform the adjustment of Pr. 820 again. |
| 3 | Large fluctuation of the rotation speed relative to load fluctuation. | |
| 4 | Torque shortage or motor backlash occurs when starting or passing a low-speed range under Real sensorless vector control. | Set the speed control gain higher. (The same as No.1.)<br>If this cannot be prevented through gain adjustment, raise Pr. 13 "Starting frequency" for a fault that occurs when starting, or shorten the acceleration time and avoid continuous operation in a low-speed range. |
| 5 | Unusual vibration, noise and overcurrent of the motor or machine occurs. | Set Pr. 824 "Torque control P gain 1 (current loop proportional gain)" lower. Lower the setting by 10% s and set a value that satisfies the following condition:<br>The setting immediately before the condition improves × 0.8 to 0.9. |
| 6 | Overcurrent or overspeed (E.OS) occurs when starting under Real sensorless vector control. | |

***Tab. 5-37:*** *Adjustment method*

**Compensating the speed control P gain in the constant output range (Pr. 1116)**

- In the constant output range (rated speed or higher), the response of speed control is reduced due to weak field. Thus, the speed control P gain is needed to be compensated using Pr. 1116 "Constant output range speed control P gain compensation".
- In Pr. 1116, set a compensation amount for the doubled rated speed regarding the speed control P gain at the rated speed or lower as 100%.
  (Speed control P gain at rated speed or higher) =
  = (Speed control P gain at rated speed or lower) × (100% + compensation amount)
  Compensation amount = Pr. 1116 / Rated speed × (Speed – Rated speed)

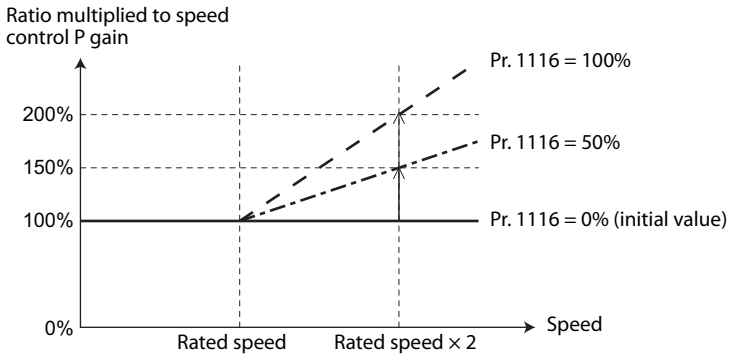


***Fig. 5-25:*** *Compensation range of speed control P gain*

**Setting the speed control P gain in the per-unit system (Pr. 1117, Pr. 1118, Pr. 1121)**

- The speed control P gain can be set in the per-unit (pu) system.
- In the per-unit system:
  When "1" is set, the torque (Iq) command is 100% (rated Iq) when the speed deviation is 100%.
  When "10" is set, the torque (Iq) command is 10% (rated Iq) when the speed deviation is 100%.
  Set the 100% speed in Pr. 1121 "Per-unit speed control reference frequency".
- The speed control P gain becomes as follows according to Pr. 1117 "Speed control P gain 1 (per-unit system)", Pr. 1118 "Speed control P gain 2 (per-unit system)", and the RT signal.

| Pr. 1117 | Pr. 1118 | Pr. 830 | RT signal | Speed control P gain |
|---|---|---|---|---|
| 9999 | 9999 | — | OFF | Pr. 820 |
| | | 9999 | ON | Pr. 820 |
| | | Other than 9999 | ON | Pr. 830 |
| Other than 9999 | 9999 | — | — | Pr. 1117 |
| 9999 | Other than 9999 | — | OFF | Pr. 820 |
| | | | ON | Pr. 1118 |
| Other than 9999 | Other than 9999 | — | OFF | Pr. 1117 |
| | | | ON | Pr. 1118 |

***Tab. 5-38:*** *Speed control P gain in the per-unit system*

**NOTES**

The per-unit system setting is available only under Real sensorless vector control or vector control.

When the speed control P gain or model speed control gain is set in the per-unit system, the easy gain tuning selection (Pr. 819 = "1 or 2") becomes invalid.

**Switching over P/PI control (Pr. 1115, X44 signal)**

- In speed control under Real sensorless vector control or vector control, whether or not to add the integral time (I) when performing gain adjustment with P gain and integral time can be performed with the P/PI control switchover signal (X44).
  - When X44 signal is OFF . . . . PI control
  - When X44 signal is ON . . . . . P control
- To input the X44 signal, set "44" in any of Pr. 178 to Pr. 189 (input terminal function selection) to assign the function to a terminal.
- When the X44 signal is turned ON, integration is stopped and the accumulated integral term is reduced and cleared according to Pr. 1115 "Speed control integral term clear time". Shock at P/PI control switchover is absorbed.
  In Pr. 1115, set time when the integral term is reduced from 100% to 0% regarding the rated torque current (Iq) as 100%.
  Turning OFF the X44 signal resumes the integral operation.

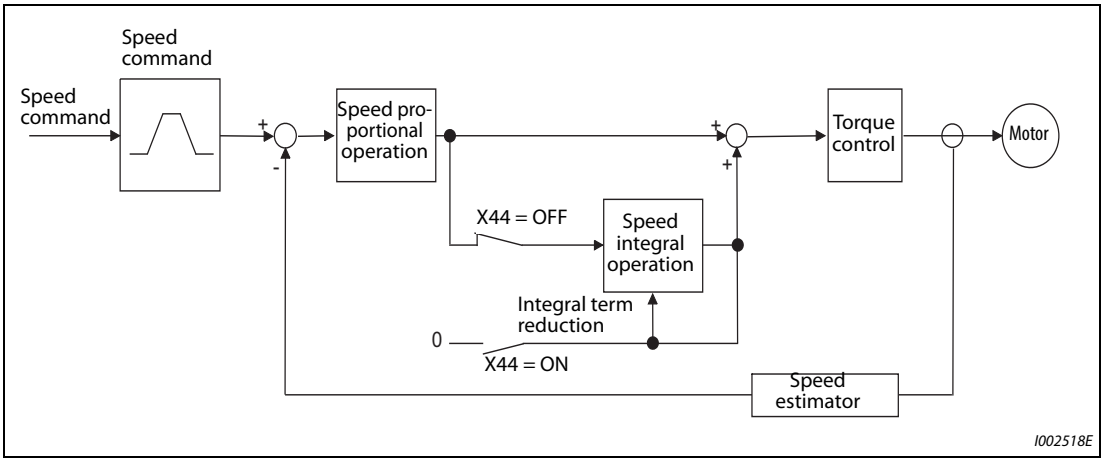


***Fig. 5-26:*** *Function block diagram*

**NOTE**

Changing the terminal assignment using Pr. 178 to Pr. 189 (input terminal function selection) may affect the other functions. Set parameters after confirming the function of each terminal.

## 5.3.6 Troubleshooting in the speed control Sensorless Vector PM

| No. | Condition | Cause | Countermeasure |
|---|---|---|---|
| 1 | The motor does not rotate.<br>(Vector control) | Motor wiring is incorrect. | • Check the wiring.<br>Set V/F control (set Pr. 80 "Motor capacity" or Pr. 81 "Number of motor poles" to "9999") and check the motor rotation direction.<br>For SF-V5RU (1500 r/min series), set Pr. 19 "Base frequency voltage" to "170 V (340 V)" when the value is 3.7 kW or lower, and set it to "160 V (320 V)" when the value is higher, and set Pr. 3 "Base frequency" to "50 Hz".<br> 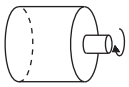 <br>When a forward signal is input, rotation in the counterclockwise direction as viewed from the motor shaft direction is correct. (Clockwise rotation means that the phase sequence of the inverter secondary side wiring is different.) |
| | | Encoder type selection switch (FR-A8AP (option)) is incorrect. | • Check the encoder specifications.<br>Check the encoder type selection switch of differential/ complementary (FR-A8AP (option)). |
| | | Wiring of encoder is incorrect. | • When using the system where the motor shaft can be rotated by an external force other than the motor without any safety troubles, rotate the motor counterclockwise and check if FWD is indicated.<br>If REV is indicated, the phase sequence of the encoder is incorrect.<br>Check the wiring, and set Pr. 359 "Encoder rotation direction" in accordance with the motor specification. (Refer to page 2-61.)<br>If the clockwise direction is forward as viewed from the motor shaft side, set Pr. 359 = "0".<br>If the counterclockwise direction is forward as viewed from the motor shaft side, set Pr. 359 = "1". |
| | | The setting of Pr. 369 "Number of encoder pulses" and the number of encoder pulses used are different. | • If the parameter setting value is lower than the number of encoder pulses used, the motor will not rotate. Set Pr. 369 correctly. |
| | | Encoder power specifications are incorrect. Alternatively, power is not input. | • Check the encoder power specifications (5 V/12 V/15 V/24 V), and input the external power supply. When the encoder output is the differential line driver type, only 5 V can be input. Make the voltage of the external power supply the same as the encoder output voltage, and connect the external power supply between PG and SD. |
| 2 | Motor does not run at the correct speed.<br>(Command speed and actual speed differ.) | Speed command from the controller is different from the actual speed. The speed command is affected by noise. | • Check that the speed command sent from the controller is correct. (Take EMC measures.)<br>• Set Pr. 72 "PWM frequency selection" lower. |
| | | The command speed and the speed recognized by the inverter are different. | • Adjust the bias and gain (Pr. 125, Pr. 126, C2 to C7, C12 to C15) of the speed command again. |
| | | The setting for the number of encoder pulses is incorrect. | • Check the setting of Pr. 369 "Number of encoder pulses". (Vector control) |
| 3 | The speed does not accelerate to the command speed. | Torque shortage.<br>The torque limit is operating. | • Raise the torque limit.<br>(Refer to the torque limit for speed control on page 5-83.)<br>• Increase the capacity. |
| | | Only P (proportional) control is performed. | • Speed deviation occurs under P (proportional) control when the load is heavy. Select PI control. |

***Tab. 5-39:*** *Troubleshooting (1)*

| No. | Condition | Cause | Countermeasure |
|---|---|---|---|
| 4 | Motor speed fluctuates. | Speed command varies. | • Check that the speed command sent from the controller is correct. (Take EMC measures.)<br>• Set Pr. 72 "PWM frequency selection" lower.<br>• Set Pr. 822 "Speed setting filter 1" higher (page 5-386). |
| | | Torque shortage. | • Raise the torque limit.<br>(Refer to the torque limit for speed control on page 5-83.)<br>• Perform speed feed forward control. |
| | | Speed control gain is not suitable for the machine. (Resonance occurs.) | • Perform easy gain tuning.<br>• Adjust Pr. 820 "Speed control P gain 1" and Pr. 821 "Speed control integral time 1".<br>• Perform speed feed forward control or model adaptive speed control. |
| 5 | Hunting (vibration or acoustic noise) occurs in the motor or the machine. | Speed control gain is too high. | • Perform easy gain tuning.<br>• Set Pr. 820 "Speed control P gain 1" lower and Pr. 821 "Speed control integral time 1" higher.<br>• Perform speed feed forward control or model adaptive speed control. |
| | | Torque control gain is too high. | • Set Pr. 824 "Torque control P gain 1 (current loop proportional gain)" lower. |
| | | Motor wiring is incorrect. | • Check the wiring. |
| 6 | Acceleration/ deceleration time is different from the setting. | Torque shortage. | • Raise the torque limit.<br>(Refer to the torque limit for speed control on page 5-83.)<br>• Perform speed feed forward control. |
| | | Load inertia is too high. | • Set acceleration/deceleration time suitable for the load. |
| 7 | Machine movement is unstable. | Speed control gain is not suitable for the machine. | • Perform easy gain tuning.<br>• Adjust Pr. 820 and Pr. 821.<br>• Perform speed feed forward control or model adaptive speed control. |
| | | Response is slow because of the inverter's acceleration/ deceleration time setting. | • Set the optimum acceleration/deceleration time. |
| 8 | Rotation ripple occurs during the low-speed operation. | High carrier frequency is affecting the motor rotation. | • Set Pr. 72 "PWM frequency selection" lower. |
| | | Speed control gain is too low. | • Set Pr. 820 "Speed control P gain 1" higher. |

***Tab. 5-39:*** *Troubleshooting (2)*

| Parameters referred to | | | |
|---|---|---|---|
| Pr. 3 | Base frequency | => | page 5-631 |
| Pr. 19 | Base frequency voltage | => | page 5-631 |
| Pr. 72 | PWM frequency selection | => | page 5-211 |
| Pr. 80 | Motor capacity | => | page 5-55 |
| Pr. 81 | Number of motor poles | => | page 5-55 |
| Pr. 125 | Terminal 2 frequency setting gain frequency | => | page 5-388 |
| Pr. 126 | Terminal 4 frequency setting gain frequency | => | page 5-388 |
| Pr. 359 | Encoder rotation direction | => | page 2-61 |
| Pr. 369 | Number of encoder pulses | => | page 2-61 |
| Pr. 822 | Speed setting filter 1 | => | page 5-386 |
| Pr. 824 | Torque control P gain 1 (current loop proportional gain) | => | page 5-141 |

## 5.3.7 Speed feed forward control and model adaptive speed control

Sensorless Vector PM

Speed feed forward control or model adaptive speed control can be selected using parameter settings.

Under speed feed forward control, the motor trackability for speed command changes can be improved.

Under model adaptive speed control, the speed trackability and the response level to motor external disturbance torque can be adjusted individually.

| Pr. | Name | Initial value | Setting range | Description |
|---|---|---|---|---|
| 828<br>G224 | Model speed control gain | 60% | 0 to 1000% | Set the gain for the model speed controller. |
| 877<br>G220 | Speed feed forward control/model adaptive speed control selection | 0 | 0 | Perform normal speed control. |
| | | | 1 | Perform speed feed forward control. |
| | | | 2 | Model adaptive speed control becomes valid. |
| 878<br>G221 | Speed feed forward filter | 0 s | 0 to 1 s | Set the primary delay filter for the result of the speed feed forward calculated from the speed command and load inertia ratio. |
| 879<br>G222 | Speed feed forward torque limit | 150% | 0 to 400% | Set a maximum limit for the speed feed forward torque. |
| 880<br>C114 | Load inertia ratio | 7-fold | 0 to 200-fold | Set the load inertia ratio for the motor. |
| 881<br>G223 | Speed feed forward gain | 0% | 0 to 1000% | Set the calculation result for speed feed forward as the gain. |
| 1119<br>G262 | Model speed control gain (per-unit system) | 9999 | 0 to 300 | Set the gain for the model speed controller in the per-unit system. |
| | | | 9999 | The Pr. 828 setting is applied to the operation. |
| 1121<br>G260 | Per-unit speed control reference frequency | 120 Hz ① | 0 to 300 | Set the speed at 100% when setting speed control P gain or model speed control gain in the per-unit system. |
| | | 60 Hz ② | | |

① The value for the FR-A820-03160(55K) or lower and FR-A840-01800(55K) or lower.

② The value for the FR-A820-03800(75K) or higher and FR-A840-02160(75K) or higher.

**NOTE**

When using model adaptive speed control, use the data obtained from the easy gain tuning for Pr. 828 "Model speed control gain" setting. Make the setting with easy gain tuning (at the same time). (Refer to page 5-66.)

**Speed feed forward control (Pr. 877 = "1")**

- When the load inertia ratio is set in Pr. 880, the required torque for the set inertia is calculated according to the acceleration and deceleration commands, and the torque is generated quickly.
- When the speed feed forward gain is 100%, the calculation result for speed feed forward is applied as is.
- If the speed command changes suddenly, the torque is increased by the speed feed forward calculation. The maximum limit for the speed feed forward torque is set in Pr. 879.
- The speed feed forward result can also be lessened with a primary delay filter in Pr. 878.

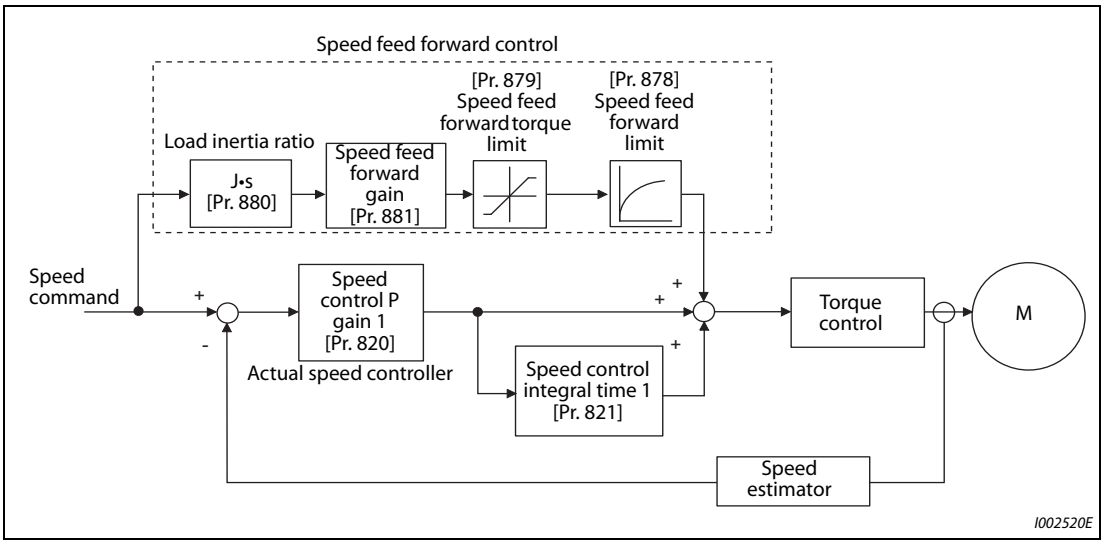


***Fig. 5-27:*** *Block diagram of speed feed forward control*

**NOTES**

The speed feed forward control is enabled for the first motor.

Even if the driven motor is switched to the second motor while Pr. 877 = "1", the second motor is operated as Pr. 877 = "0".

Under PM sensorless vector control, this function is available when low-speed range high-torque characteristic is enabled by Pr. 788 "Low speed range torque characteristic selection" = "9999 (initial value)". (Refer to page 5-74.)

**Model adaptive speed control (Pr. 877 = "2", Pr. 828, Pr. 1119)**

- The model speed of the motor is calculated, and the feedback is applied to the speed controller on the model side. Also, this model speed is set as the command of the actual speed controller.
- The inertia ratio of Pr. 880 is used when the speed controller on the model side calculates the torque current command value.
- The torque current command of the speed controller on the model side is added to the output of the actual speed controller, and set as the input of the iq current control.
  Pr. 828 is used for the speed control on the model side (P control), and first gain Pr. 820 is used for the actual speed controller.
- The model speed control gain can be set in the per-unit (pu) system in Pr. 1119.
- In the per-unit system:

  When "1" is set, the torque (Iq) command is 100% (rated Iq) when the speed deviation is 100%.
  When "10" is set, the torque (Iq) command is 10% (rated Iq) when the speed deviation is 100%.
  Set the 100% speed in Pr. 1121 "Per-unit speed control reference frequency".

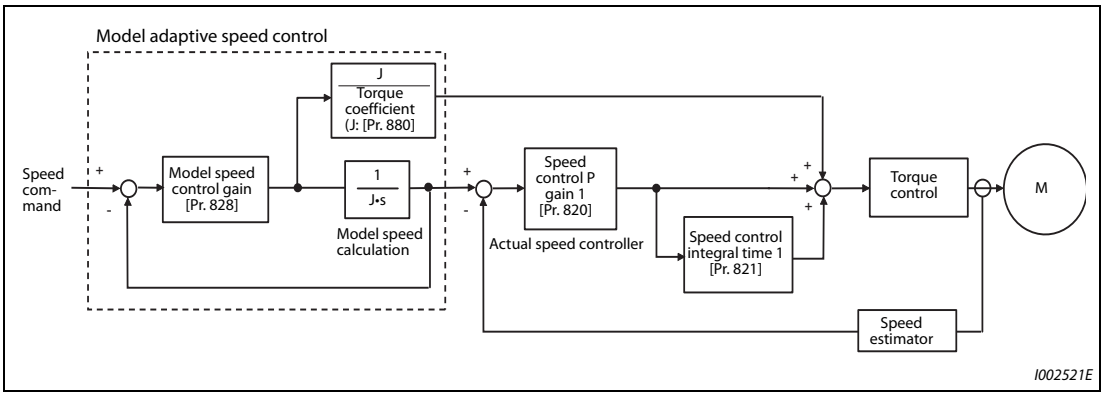


***Fig. 5-28:*** *Block diagram of model adaptive speed control*

**NOTES**

The model adaptive speed control is enabled for the first motor.

Even if the driven motor is switched to the second motor while Pr. 877 = "2", the second motor is operated as Pr. 877 = "0".

Under PM sensorless vector control, the notch filter is available when low-speed range high-torque characteristic is enabled by Pr. 788 "Low speed range torque characteristic selection" = "9999 (initial value)". (Refer to page 5-74.)

Under model adaptive speed control, because the appropriate gain values for the model and actual loop sections are based on the response that was set for easy gain tuning, when raising the response level, Pr. 818 "Easy gain tuning response level setting" must be re-evaluated (raised).

The per-unit system setting is available only under Real sensorless vector control or vector control.

When the speed control P gain or model speed control gain is set in the per-unit system, the easy gain tuning selection (Pr. 819="1 or 2") becomes invalid.

### Combining with easy gain tuning

- The following table shows the relationship between speed feed forward and model adaptive speed control, and the easy gain tuning function.

| | Easy gain tuning selection (Pr. 819) setting | | |
|---|---|---|---|
| | **0** | **1** | **2** |
| Pr. 880 "Load inertia ratio" | Manual input | The inertia ratio value calculated by easy gain tuning is displayed.<br>Manual input is available only during a stop. | Manual input |
| Pr. 820 "Speed control P gain 1" | Manual input | The tuning result is displayed.<br>Write is not available. | The tuning result is displayed.<br>Write is not available. |
| Pr. 821 "Speed control integral time 1" | Manual input | The tuning result is displayed.<br>Write is not available. | The tuning result is displayed.<br>Write is not available. |
| Pr. 828 "Model speed control gain" | Manual input | The tuning result is displayed.<br>Write is not available. | The tuning result is displayed.<br>Write is not available. |
| Pr. 881 "Speed feed forward gain" | Manual input | Manual input | Manual input |

***Tab. 5-40:*** *Combining with easy gain tuning*

| Parameters referred to | | | |
|---|---|---|---|
| Pr. 820 | Speed control P gain 1 | => | page 5-66 |
| Pr. 830 | Speed control P gain 2 | => | page 5-66 |
| Pr. 821 | Speed control integral time 1 | => | page 5-66 |
| Pr. 831 | Speed control integral time 2 | => | page 5-66 |
| Pr. 788 | Low speed range torque characteristic selection | => | page 5-74 |

## 5.3.8 Torque bias Vector

The torque bias function can be used to make the starting torque start-up faster. At this time, the motor starting torque can be adjusted with a contact signal or analog signal.

| Pr. | Name | Initial value | Setting range | Description |
|---|---|---|---|---|
| 840<br>G230 | Torque bias selection | 9999 | 0 | Set the torque bias amount using contact signals (X42, X43) in Pr. 841 to Pr. 843. |
| | | | 1 | Set the torque bias amount using terminal 1 in any of C16 to C19. (When the squirrel cage rises during forward motor rotation.) |
| | | | 2 | Set the torque bias amount using terminal 1 in any of C16 to C19. (When the squirrel cage rises during reverse motor rotation.) |
| | | | 3 | The torque bias amount using terminal 1 can be set automatically in C16 to C19 and Pr. 846 according to the load. |
| | | | 24 | Torque bias command via PROFIBUS-DP communication (FR-A8NP) (-400% to 400%) |
| | | | 25 | Torque bias command via PROFIBUS-DP communication (FR-A8NP) (-327.68% to 327.67%) |
| | | | 9999 | No torque bias, rated torque 100% |
| 841<br>G231 | Torque bias 1 | 9999 | 600 to 999% | Negative torque bias amount (-400% to -1%) |
| 842<br>G232 | Torque bias 2 | | 1000 to 1400% | Positive torque bias amount (0 to 400%) |
| 843<br>G233 | Torque bias 3 | | 9999 | No torque bias setting |
| 844<br>G234 | Torque bias filter | 9999 | 0 to 5 s | The time until the torque starts up. |
| | | | 9999 | The same operation as 0 s. |
| 845<br>G235 | Torque bias operation time | 9999 | 0 to 5 s | The time for retaining the torque of the torque bias amount. |
| | | | 9999 | The same operation as 0 s. |
| 846<br>G236 | Torque bias balance compensation | 9999 | 0 to 10 V | Set the voltage for the balanced load. |
| | | | 9999 | The same operation as 0 V. |
| 847<br>G237 | Fall-time torque bias terminal 1 bias | 9999 | 0 to 400% | The bias value setting in the torque command. |
| | | | 9999 | The same as during rising (C16, C17 (Pr. 919)). |
| 848<br>G238 | Fall-time torque bias terminal 1 gain | 9999 | 0 to 400% | The gain value setting in the torque command. |
| | | | 9999 | The same as during rising (C18, C19 (Pr. 920)). |

The parameters above can be set when FR-A8AP (option) is installed.

### Block diagram

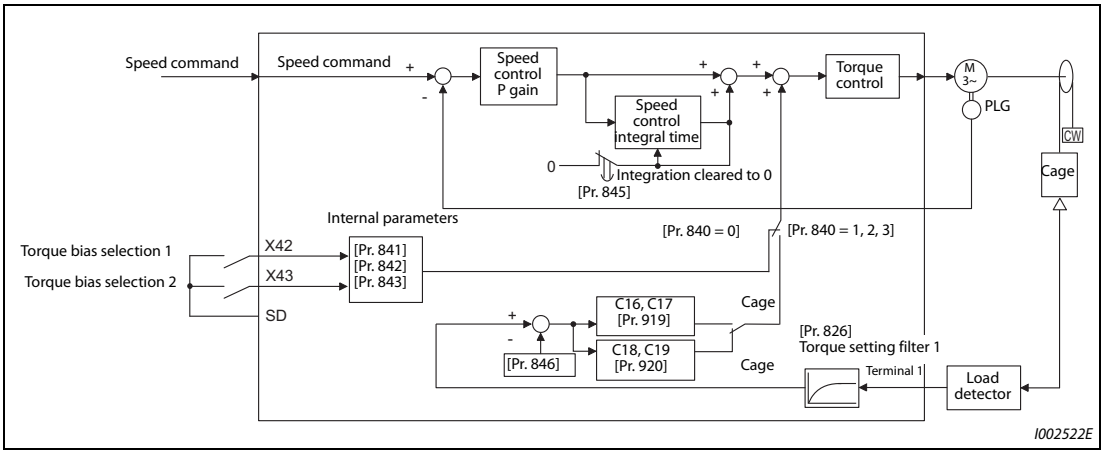


***Fig. 5-29:*** *Block diagram*

### Setting the torque bias amount using contact input (Pr. 840 = "0", Pr. 841 to Pr. 843)

- Select the torque bias amount shown in the table below using the corresponding contact signal combination.
- To input the X42 signal, set "42" in any of Pr. 178 to Pr. 189 (input terminal function selection) to assign the function to a terminal, and to input the X43 signal, set "43".

| Torque bias selection 1 (X42) | Torque bias selection 2 (X43) | Torque bias amount |
|---|---|---|
| OFF | OFF | 0% |
| ON | OFF | Pr. 841 –400% to +400% (Setting value: 600 to 1400%) |
| OFF | ON | Pr. 842 –400% to +400% (Setting value: 600 to 1400%) |
| ON | ON | Pr. 843 –400% to +400% (Setting value: 600 to 1400%) |

***Tab. 5-41:*** *Setting torque bias amount with the contact input*

- When Pr. 841 = 1025, the torque bias is 25%. When Pr. 842 = 975, the torque bias is –25%. When Pr. 843 = 925, the torque bias is –75%.

**NOTE**

Changing the terminal assignment using Pr. 178 to Pr. 189 (input terminal function selection) may affect the other functions. Set parameters after confirming the function of each terminal.

**Setting the torque bias amount using terminal 1 (Pr. 840 = "1, 2", Pr. 847, Pr. 848)**

- Calculate the torque bias from the load input to terminal 1 as shown in the diagram below, and then apply the torque bias.
- To set the torque bias amount with a voltage input to terminal 1, set Pr. 868 "Terminal 1 function assignment" = "6".
- The torque bias amount (Pr. 847) and gain amount (Pr. 848) when descending (reverse motor rotation when the Pr. 840 setting is "1", forward motor rotation when the setting is "2") can be set in a range of 0 to 400%. When Pr. 847 or Pr. 848 = "9999", the setting is the same for both descending and ascending (C16 to C19).

| Pr. 840 Setting | When ascending | When descending |
|---|---|---|
| 1 | **(Forward motor rotation)**<br> 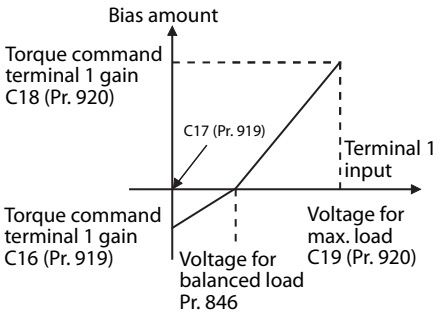 <br> | **(Reverse motor rotation)**<br> 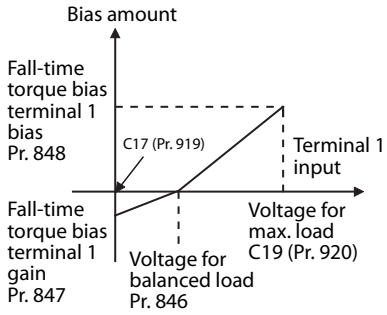 <br> |
| 2 | **(Reverse motor rotation)**<br> 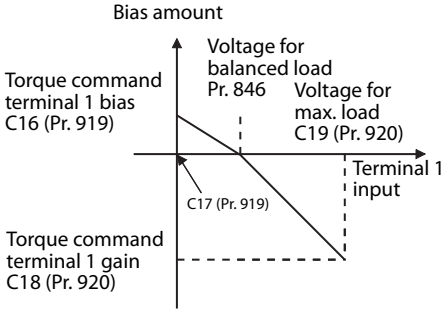 <br> | **(Forward motor rotation)**<br> 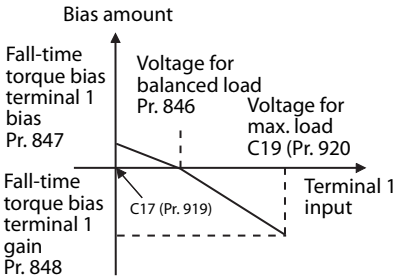 <br> |

***Tab. 5-42:*** *Setting the torque bias amount using terminal 1*

**NOTE**

Input 0 to 10 V (torque command) to the terminal 1 that is used for the torque bias function. Any negative input voltage is regarded as 0 V.

**Setting the torque bias amount automatically using terminal 1 (Pr. 840 = "3", Pr. 846)**

- The settings of C16 "Terminal 1 bias command (torque/magnetic flux)", C17 "Terminal 1 bias (torque/magnetic flux)", C18 "Terminal 1 gain command (torque/magnetic flux)", C19 "Terminal 1 gain (torque/magnetic flux)" and Pr. 846 "Torque bias balance compensation" can be set automatically according to the load.
- To set the torque bias amount with a voltage input to terminal 1, set Pr. 868 "Terminal 1 function assignment" ="6".
- Set the terminal 1 to accept inputs of load detection voltage, set "3" in Pr. 840 "Torque bias selection", and adjust the parameter settings following the procedures below.
- Setting C16, C17 (Pr. 919)

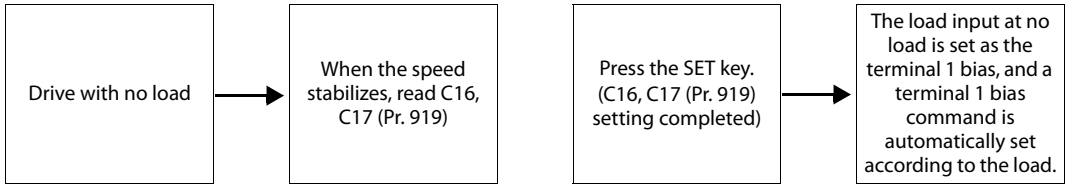


- Setting C18, C19 (Pr. 920)

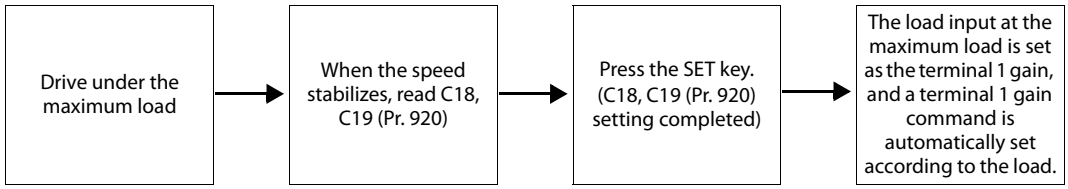


- Setting Pr. 846

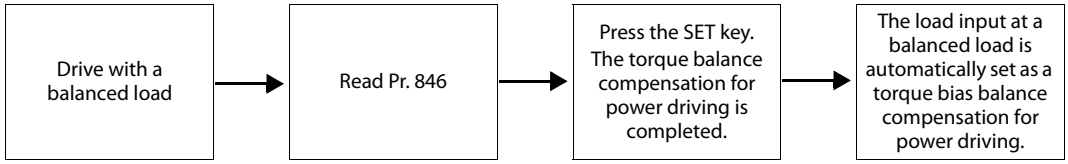


**NOTE** To perform a torque bias operation after the automatic setting is completed, set Pr. 840 to "1" or "2".

**Torque bias command via PROFIBUS-DP communication (Pr.840 = "24 or 25")**

A torque bias command value can be set using the FR-A8NP (PROFIBUS-DP communication).

| Pr. 840 setting | Torque bias command input | Setting range | Setting increments |
|---|---|---|---|
| 24 | Torque bias command from the buffer memory of PROFIBUS (REF1 to 7) | 600 to 1400<br>(-400% to 400%) | 1% |
| 25 | | -32768 to 32767<br>(complement of 2)<br>(-327.68% to 327.67%) | 0.,01% |

***Tab. 5-43:*** *Torque bias selection via PROFIBUS-DP*

**NOTE** For the details of FR-A8NP setting, refer to the Instruction Manual of FR-A8NP.

**Torque bias operation (Pr. 844, Pr. 845)**

- The torque start-up can be made slower by setting Pr. 844 "Torque bias filter" ≠ "9999". The torque start-up operation at this time is the time constant of the primary delay filter.
- Set the time for continuing the output torque simply by using the command value for the torque bias in Pr. 845 "Torque bias operation time".

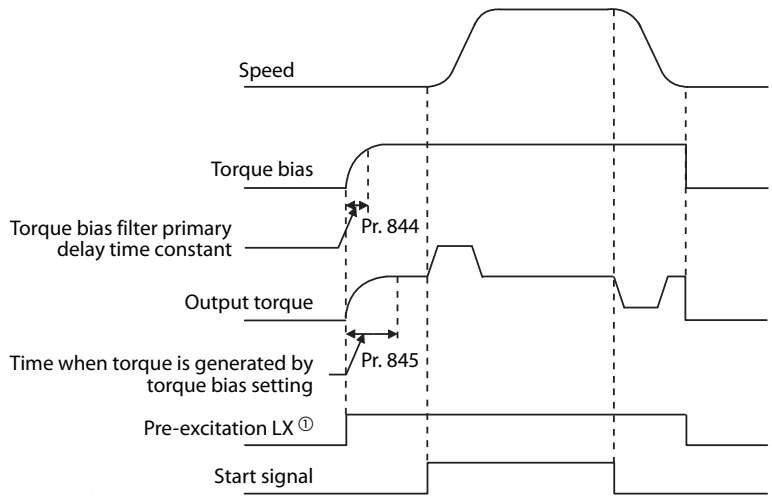


① When pre-excitation is not performed, the torque bias functions at the same time as the start signal.

I001517E

***Fig. 5-30:*** *Torque output*

**NOTES**

When torque bias is enabled and Pr. 868 = "6", terminal 1 operates as a torque command instead of a frequency setting auxiliary. When override compensation is selected using Pr. 73 "Analog input selection" and terminal 1 is the main speed, no main speed (main speed = (0 Hz) is set.

Changing the terminal assignment using Pr. 178 to Pr. 189 (input terminal function selection) may affect the other functions. Set parameters after confirming the function of each terminal.

| Parameters referred to | | | |
|---|---|---|---|
| Pr. 73 | Analog input selection | => | page 5-376 |
| Pr. 178 to Pr. 189 | (input terminal function selection) | => | page 5-409 |
| C16 to C19 (Pr. 919, Pr. 920) | (torque setting voltage (current) bias/gain) | => | page 5-396 |

## 5.3.9 Avoiding motor overrunning Vector

Motor overrunning due to excessive load torque or an error in the setting for the number of encoder pulses can be avoided.

| Pr. | Name | Initial value | Setting range | Description |
|---|---|---|---|---|
| 285<br>H416 | Speed deviation excess detection frequency ① | 9999 | 0 to 30 Hz | Set the speed deviation excess detection frequency (difference between the actual rotation speed and speed command value) at which the protective function (E.OSD) activates. |
| | | | 9999 | No speed deviation excess |
| 853 ②<br>H417 | Speed deviation time | 1s | 0 to 100 s | Set the time from when the speed deviation excess state is entered to when the protective function (E.OSD) activates. |
| 873 ②<br>H415 | Speed limit | 20 Hz | 0 to 400 Hz | Set the frequency limit with the set frequency + Pr. 873 value. |
| 690<br>H881 | Deceleration check time | 1 s | 0 to 3600 s | Set the time required to shut off output due to deceleration check after the start signal is OFF. |
| | | | 9999 | No deceleration check |

① This is the overspeed detection frequency under encoder feedback control. (Refer to page 5-669.)

② These parameters are available when FR-A8AP (option) is installed.

### Speed deviation excess detection (Pr. 285, Pr. 853)

- A trip can be set for when the deviation between the set frequency and actual rotation speed is large, such as when the load torque is excessive.
- When the difference (absolute value) between the speed command value and actual rotation speed in speed control under vector control is equal to higher than the setting value in Pr. 285 "Speed deviation excess detection frequency" for a continuous time equal to or longer than the setting value in Pr. 853 "Speed deviation time", Speed deviation excess detection (E.OSD) activates to shut off the inverter output.

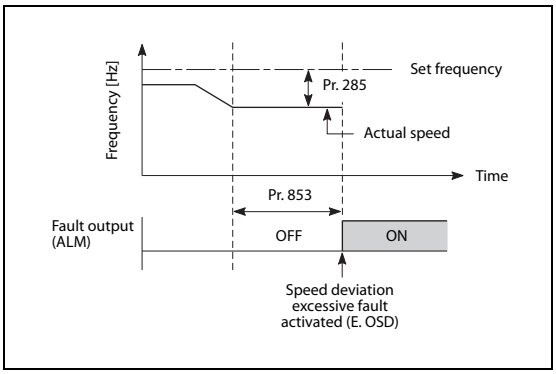


***Fig. 5-31:***
*Speed deviation excess detection*

I001518E

**Speed limit (Pr. 873)**

- This function prevents overrunning even when the setting value for the number of encoder pulses and the value of the actual number of pulses are different. When the setting value for the number of encoder pulses is lower than the actual number of pulses, because the motor may increase speed, the output frequency is limited with the frequency of (set frequency + Pr. 873).

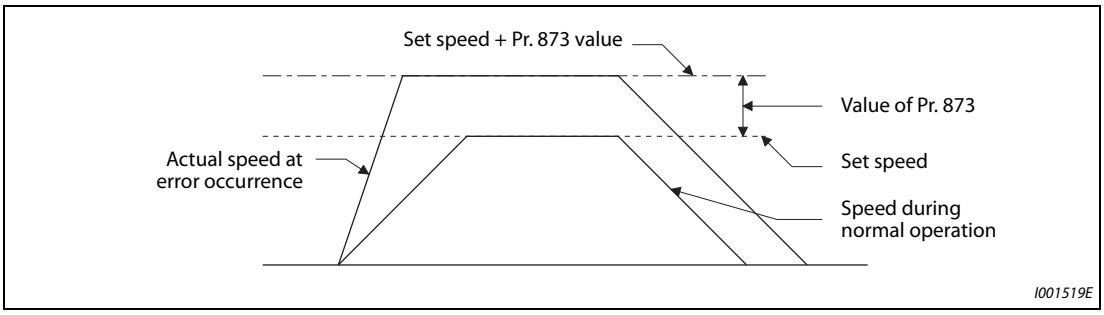


***Fig. 5-32:*** *Speed limit*

**NOTES**

When the automatic restart after instantaneous power failure function is selected (Pr. 57 "Restart coasting time" ≠ "9999") and the setting value for the number of encoder pulses is lower than the actual number of pulses, the output speed is limited with the synchronous speed of the value of Pr. 1 "Maximum frequency" + Pr. 873.

When a regenerative driving torque limit is applied and the speed limit function activates, the output torque may drop suddenly. Also, when the speed limit function activates during pre-excitation operation, output phase loss (E.LF) may occur.
If the setting for the number of encoder pulses is confirmed as correct, it is recommended that Pr. 873 be set to the maximum value (400 Hz).

Even if the set frequency is lowered after inverter operation, the speed limit value is not lowered. During deceleration, the speed is limited at frequency command value + Pr. 873.

**Deceleration check (Pr. 690)**

- When performing a deceleration stop on the motor, accidental acceleration can cause the inverter to trip. This can prevent a malfunction due to an incorrect encoder pulse setting, when the motor has stopped.
- When the difference between the actual motor speed and the speed command value exceeds 2 Hz after the start signal (STF, STR) is OFF, the deceleration check will start.
- If the motor has not decelerated in the time period between the start signal (STF, STR) OFF and the Pr.690 setting, the protective function (E.OSD) is activated to trip the inverter.

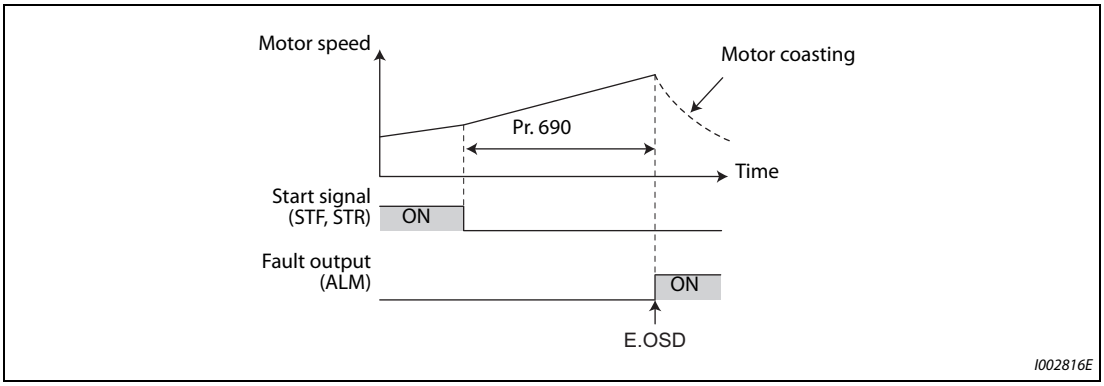


***Fig. 5-33:*** *Deceleration check time*

**NOTES**

The deceleration check is enabled in the speed control of the vector control.

If the protective function (E.OSD) operates due to deceleration check, check whether the Pr.369 Number of encoder pulses setting is correct.

| Parameters referred to | | | |
|---|---|---|---|
| Pr. 285 | Overspeed detection frequency | => | page 5-669 |
| Pr. 369 | Number of encoder pulses | => | page 2-72 |

## 5.3.10 Notch filter Sensorless Vector PM

The response level of speed control in the resonance frequency band of mechanical systems can be lowered to avoid mechanical resonance.

| Pr. | Name | Initial value | Setting range | Description |
|---|---|---|---|---|
| 1003<br>G601 | Notch filter frequency | 0 | 0 | No notch filter |
| | | | 8 to 1250 Hz | Set the frequency for the center of gain attenuation. |
| 1004<br>G602 | Notch filter depth | 0 | 0 to 3 | 0 (Deep) → 3 (Shallow) |
| 1005<br>G603 | Notch filter width | 0 | 0 to 3 | 0 (Narrow) → 3 (Wide) |

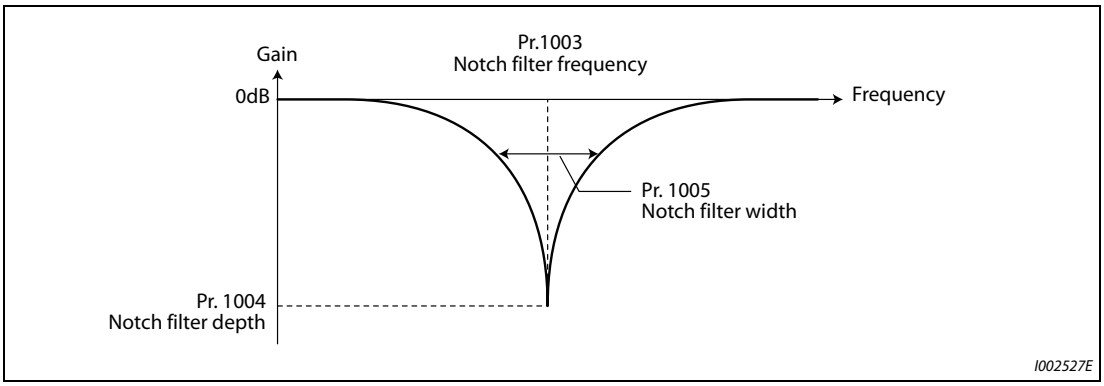


***Fig. 5-34:*** *Notch filter curve*

### Pr. 1003 "Notch filter frequency"

- This sets the frequency for the center when attenuating the gain. If the mechanical resonance frequency is unknown, lower the notch frequency in order from the highest. The point where the resonance is smallest is the optimum setting for the notch frequency.
- The mechanical characteristics can be assessed in advance with a machine analyzer that uses FR Configurator2. This enables the required notch frequency to be determined.

### Pr. 1004 "Notch filter depth"

- A deeper notch depth has a greater effect in reducing mechanical resonance, but because the phase delay is larger, vibration may increase. Adjust by starting from the shallowest value.

| **Setting** | 3 | 2 | 1 | 0 |
|---|---|---|---|---|
| **Depth** | Shallow | → | ← | Deep |
| **Gain** | –4dB | –8dB | –14dB | –40dB |

***Tab. 5-44:*** *Notch filter depth*

**Pr. 1005 "Notch filter width"**

- This sets the width of the frequency to which to apply the notch filter. The setting can be adjusted according to the width of the frequency range to be excluded.
- If the width is too wide, the response level of speed control will drop, and the system may become unstable.

**NOTE**

If a value higher than 500 Hz is set in Pr. 1003 while the response speed is normal (Pr. 800 = any of "0 to 5 and 9 to 14"), the inverter operates at 500 Hz.

| Parameters referred to | | | |
|---|---|---|---|
| Pr. 788 | Low speed range torque characteristic selection | => | page 5-74 |
| Pr. 800 | Control method selection | => | page 5-55 |

# 5.4 Torque control under Real sensorless vector control and vector control

| Purpose | Parameter to set | | | Refer to page |
|---|---|---|---|---|
| To selection the torque command source and to set the torque command value | Torque command | P.D400 to P.D402, P.G210 | Pr. 803 to Pr. 806 | 5-129 |
| To prevent the motor from overspeeding | Speed limit | P.H410 to P.H412 | Pr. 807 to Pr. 809 | 5-133 |
| To raise precision of torque control | Torque control gain adjustment | P.G213, P.G214, P.G313, P.G314 | Pr. 824, Pr. 825, Pr. 834, Pr. 835 | 5-141 |
| To stabilize torque detection signal | Torque detection filter | P.G216, P.G316 | Pr. 827, Pr. 837 | 5-180 |

## 5.4.1 Torque control

- Under torque control, the operation is controlled to output the torque as commanded.
- Motor rotation speed is steady when the motor output torque and load torque are balanced. Thus, motor speed during torque control is determined by the load.
- Under torque control, motor speed accelerates so motor output torque does not exceed motor load. In order to prevent the motor from overspeeding, set a speed limit. (Speed control is performed instead of torque control during speed limit.)
- If speed limit is not set, speed limit value setting is regarded as 0 Hz and torque control is not enabled.

### Block diagram

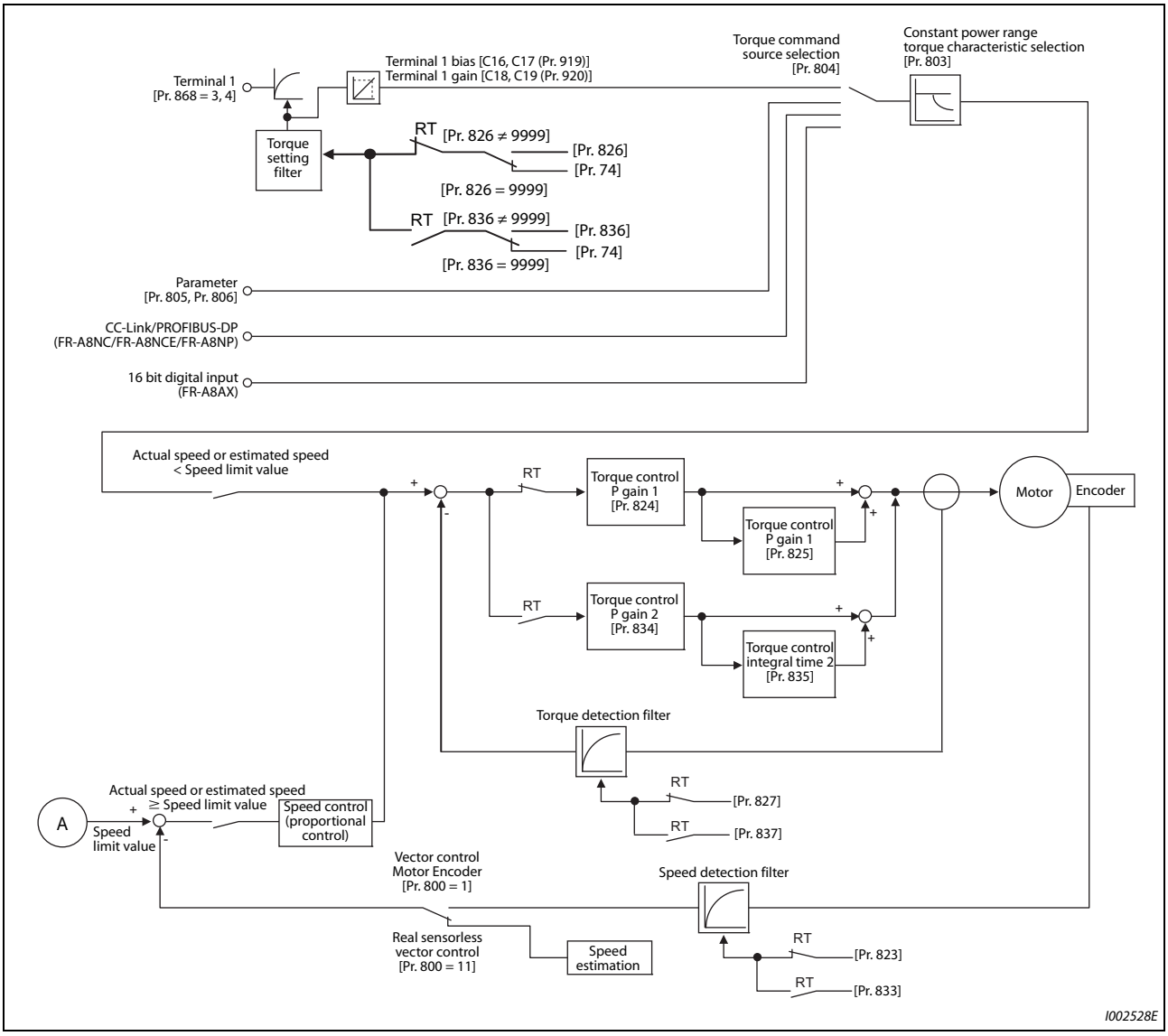


***Fig. 5-35:*** *Block diagram*

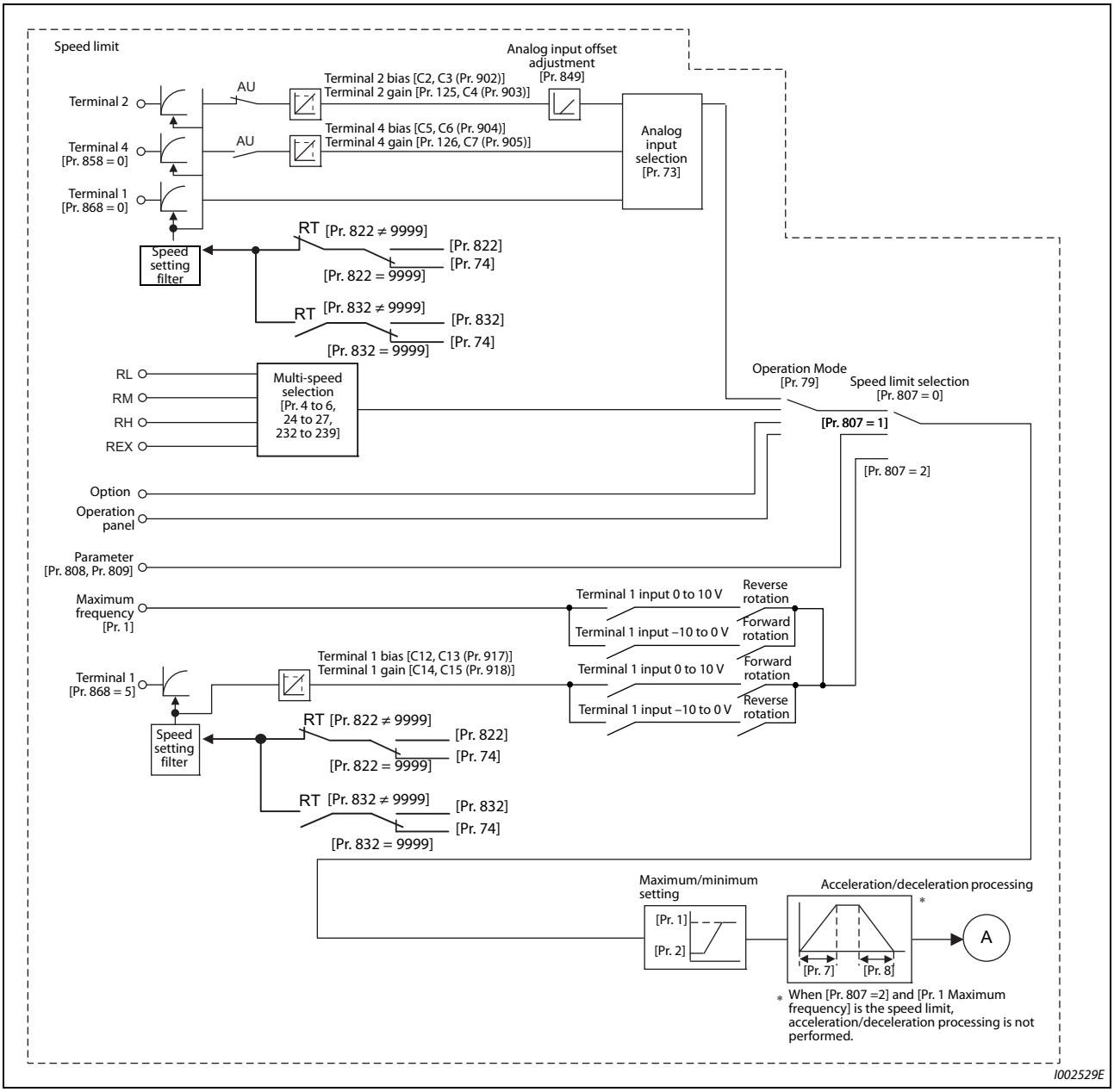


***Fig. 5-36:*** *Block diagram*

### Operation transition

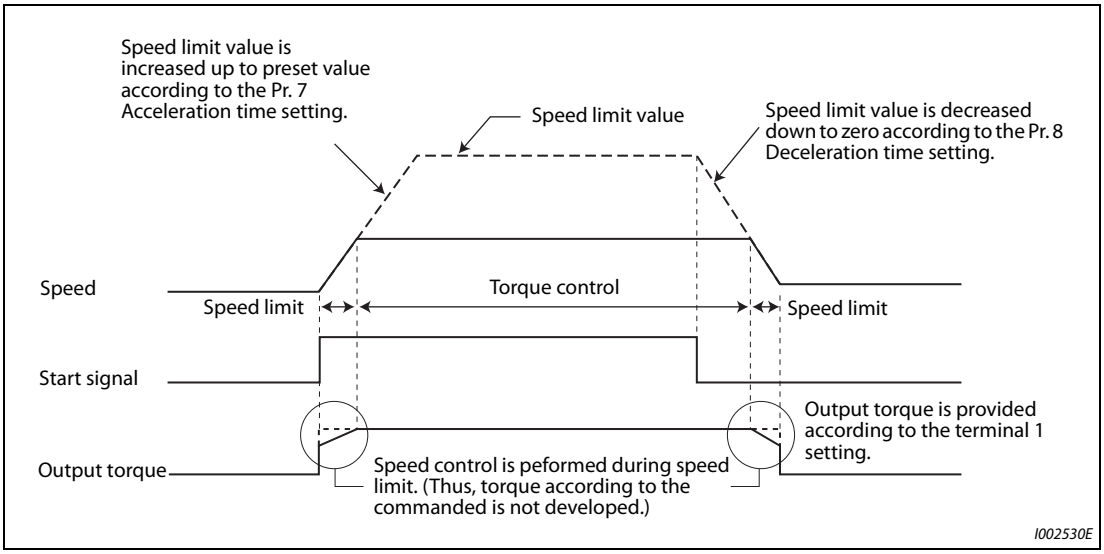


***Fig. 5-37:*** *Transition operation*

- If the setting value of Pr. 7 and Pr. 8 is "0", turning OFF the start signal enables speed control, and the output torque is controlled by the torque limit value.

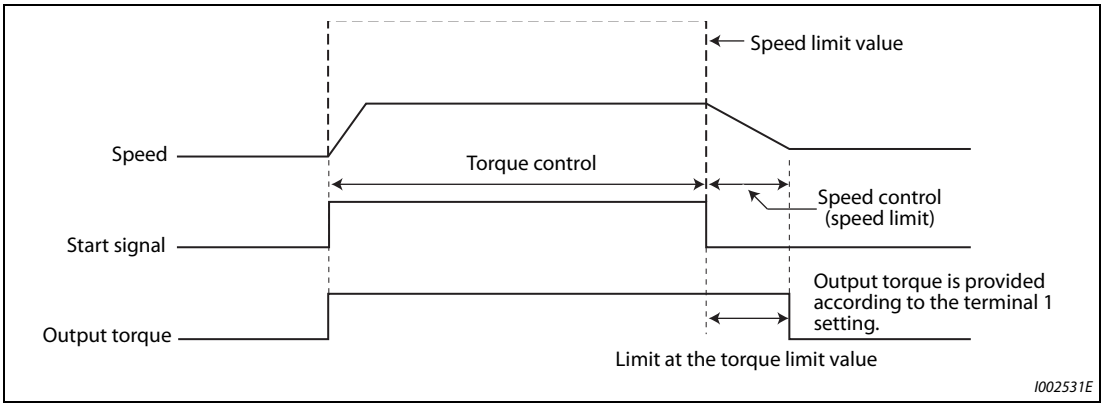


***Fig. 5-38:*** *Transition operation*

| Item | Description | |
|---|---|---|
| Start signal | External operation | STF, STR signal |
| | PU operation | FWD or REV key on the operation panel or FR-PU07. |
| Torque command | Selects the torque command input method and inputs the torque command. | |
| Speed limit | Selects the speed limit input method and inputs a speed limit value. | |

***Tab. 5-45:*** *Signal input*

**Operation example (when Pr. 804 = "0")**

Torque control is possible when actual rotation speed does not exceed the speed limit value.

When the actual speed reaches or exceeds the speed limit value, speed limit is activated, torque control is stopped and speed control (proportional control) is performed.

The following diagram indicates operation relative to analog input command from the terminal 1

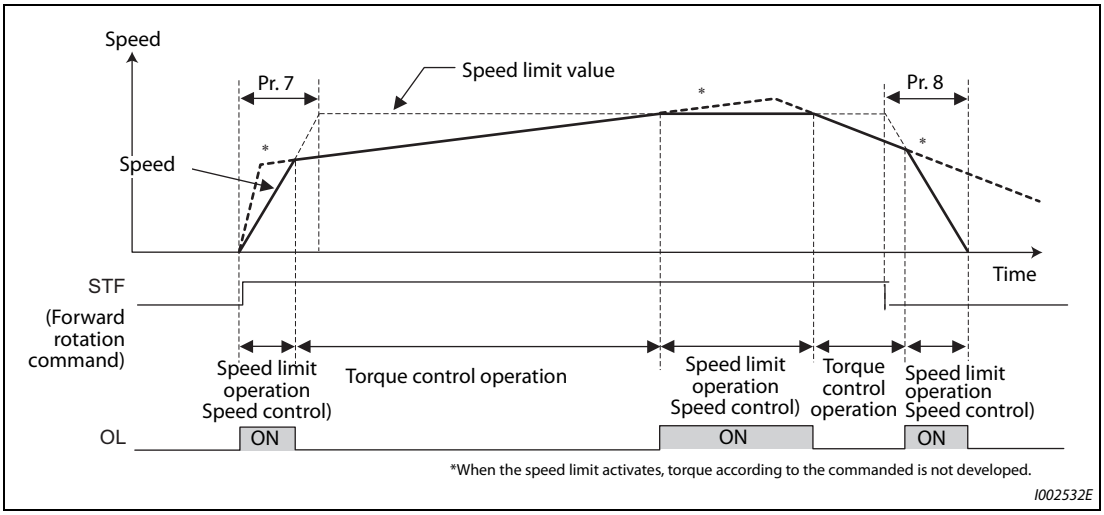


***Fig. 5-39:*** *Transition operation*

- At STF signal ON, the speed limit value is raised in accordance with the setting of Pr. 7.
- Speed control is performed when the actual speed exceeds the speed limit value.
- At STF signal OFF, the speed limit value is lowered in accordance with the setting of Pr. 8.
- Under torque control, the actual operation speed is a constant speed when the torque command and load torque are balanced.
- The direction of motor torque generation is determined by a combination of the input torque command polarity and the start signal, as given in the following table.

| Polarity of torque command | Torque generation direction | |
|---|---|---|
| | STF signal ON | STR signal ON |
| + torque command | Forward direction (forward power driving / reverse regenerative driving) | Reverse direction (forward regenerative driving / reverse power driving) |
| - torque command | Reverse direction (forward regenerative driving / reverse power driving) | Forward direction (forward power driving / reverse regenerative driving) |

***Tab. 5-46:*** *Motor torque developing direction*

**NOTES**

Once the speed limit is activated, speed control is performed and internal torque limit (Pr. 22 "Torque limit level") is enabled. (Initial value) In this case, it may not be possible to return to torque control.
Torque limit should be external torque limit (terminals 1 and 4). (Refer to page 5-83.)

Under torque control, the undervoltage avoidance function (Pr. 261 = "11" or "12"), which is one of the power failure deceleration stop function, is invalid.
When Pr. 261 = "11 (12)", the operation is performed in the same manner as if Pr. 261 = "1 (2)".

Under torque control, perform linear acceleration/deceleration (Pr. 29 = "0 (initial value)"). The inverter's protective function may operate for non-linear acceleration/deceleration patterns. (Refer to page 5-232.)

Performing pre-excitation (LX signal and X13 signal) under torque control (Real sensorless vector control) may start the motor running at a low speed even when the start command (STF or STR) is not input The motor may run also at a low speed when the speed limit value = 0 with a start command input. It must be confirmed that the motor running will not cause any safety problem before performing pre-excitation.

## 5.4.2 Setting procedure of Real sensorless vector control (torque control) Sensorless

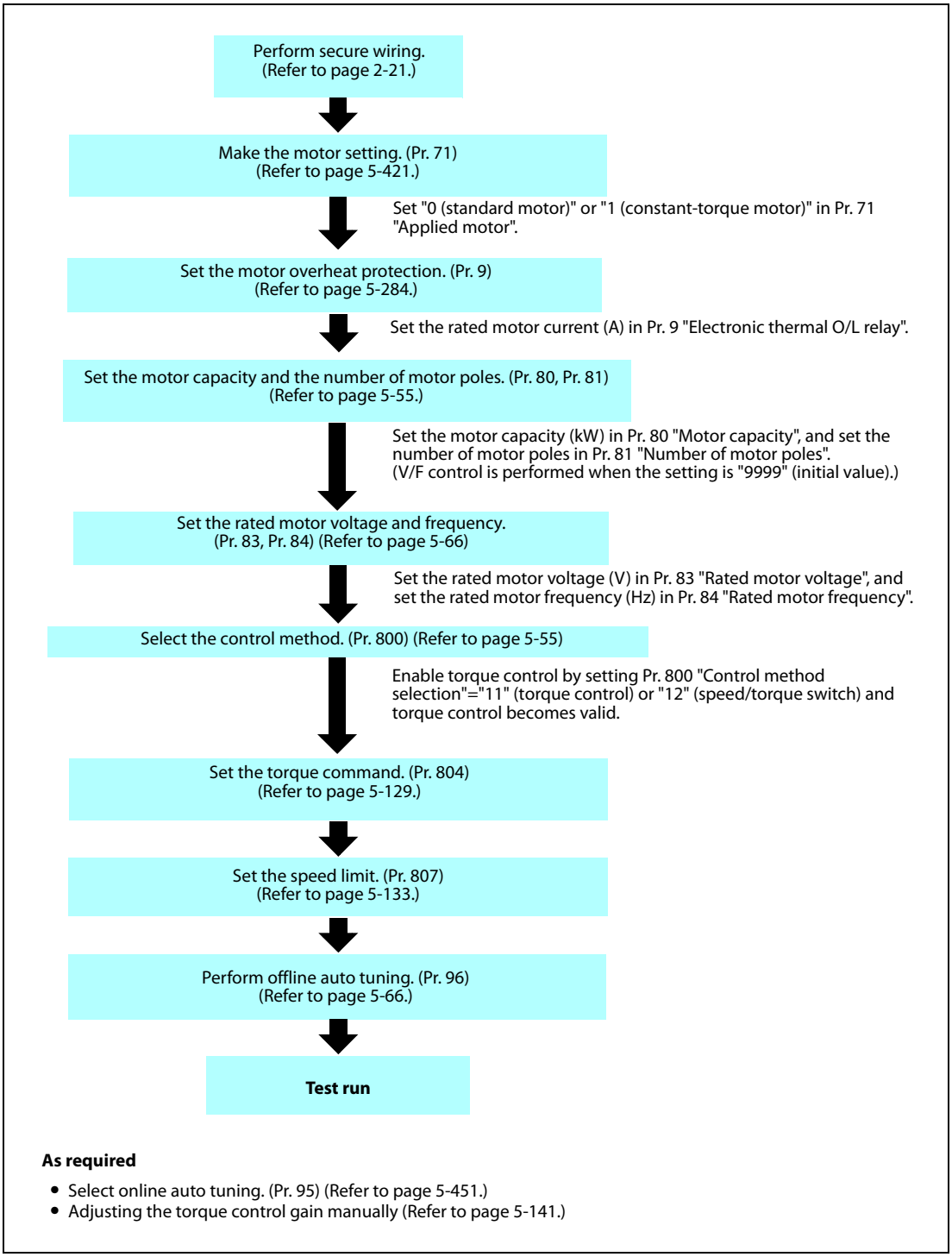


***Tab. 5-47:*** *Setting procedure of Real sensorless vector control (torque control)*

**NOTES**

During Real sensorless vector control, offline auto tuning must be performed properly before starting operations.

The carrier frequency is limited during Real sensorless vector control. (Refer to page 5-211.)

Torque control cannot be performed for low-speed regenerative driving and low-speed light load. Vector control must be selected.

Performing pre-excitation (LX signal and X13 signal) under torque control may start the motor running at a low speed even when the start signal (STF or STR) is not input. The motor may run also at a low speed when the speed limit value = 0 with a start command input. It must be confirmed that the motor running will not cause any safety problem before performing pre-excitation.

Switching between the forward rotation command (STF) and reverse rotation command (STR) must not be performed during operations under torque control. Otherwise, an overcurrent trip (E.OC[]) or opposite rotation deceleration fault (E.11) will occur.

When performing continuous operations under Real sensorless vector control in FR-A820-00250(3.7K) or lower or FR-A840-00126(3.7K) or lower, the speed fluctuation increases at 20 Hz or less, and in the low-speed range of less than 1 Hz, there may be torque shortage. In such case, make a stop once and start again to improve the operating condition.

If starting may occur while the motor is coasting under Real sensorless vector control, the frequency search must be set for the automatic restart after instantaneous power failure function (Pr. 57 ≠ "9999", Pr. 162 = "10").

When Real sensorless vector control is applied, not enough torque may be provided in the ultra low-speed range of about 2 Hz or lower.
Generally, the speed control range is as follows.
For power driving, 1:200 (2, 4 or 6 poles) (available at 0.3 Hz or higher when the rating is 60 Hz), 1:30 (8 or 10 poles) (available at 2 Hz or higher when the rating is 60 Hz).
For regenerative driving, 1:12 (2 to 10 poles) (available at 5 Hz or higher when the rating is 60 Hz).

### 5.4.3 Setting procedure for vector control (torque control) Vector

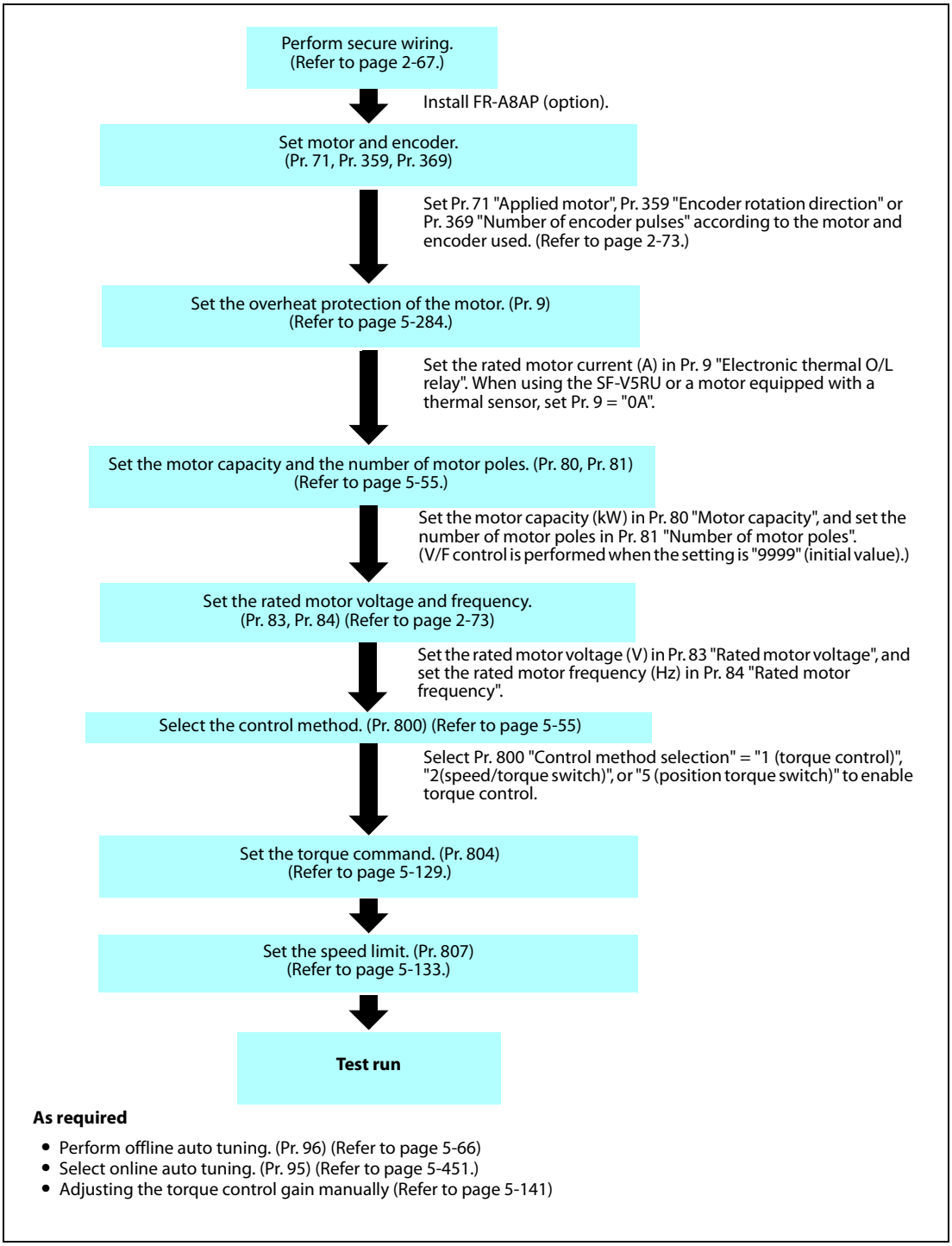


***Tab. 5-48:*** *Setting procedure for vector control (speed control)*

**NOTE** The carrier frequency is limited during vector control. (Refer to page 5-214.)

## 5.4.4 Torque command Sensorless Vector

For torque control, the torque command source can be selected.

| Pr. | Name | Initial value | Setting range | Description | |
|---|---|---|---|---|---|
| 803<br>G210 | Constant output range torque characteristic selection | 0 | 0 | Constant motor output command | In the torque command setting, select torque command for the constant output area. |
| | | | 1 | Constant torque command | |
| 804<br>D400 | Torque command source selection | 0 | 0 | Torque command based on the analog input to the terminal 1 | Speed limit by Pr. 807 setting |
| | | | 1 | Torque command (-400% to 400%) by the parameter setting (Pr. 805 or Pr. 806) | |
| | | | 3 | Torque command via CC-Link communication (FR-A8NC/FR-A8NCE)<br>Torque command via PROFIBUS-DR communication (FR-A8NP) | Speed limit by Pr. 808 or Pr. 809 setting |
| | | | 4 | 12/16-bit digital input (FR-A8AX) | Speed limit by Pr. 807 setting |
| | | | 5 | Torque command via CC-Link communication (FR-A8NC/FR-A8NCE)<br>Torque command via PROFIBUS-DR communication (FR-A8NP) | Speed limit by Pr. 808 or Pr. 809 setting |
| | | | 6 | | Speed limit by Pr. 807 setting |
| 805<br>D401 | Torque command value (RAM) | 1000% | 600 to 1400% | Writes the torque command value in RAM. Regards 1000% as 0%, and set torque command by an offset of 1000%. | |
| 806<br>D402 | Torque command value (RAM, EEPROM) | 1000% | 600 to 1400% | Writes the torque command value in RAM and EEPROM. Regards 1000% as 0%, and set torque command by an offset of 1000%. | |
| 1114<br>D403 | Torque command reverse selection | 1 | 0 | Not reversed | Select whether to reverse the torque command polarity or not when the reverse rotation command (STR) is turned ON. |
| | | | 1 | Reversed | |

### Control block diagram

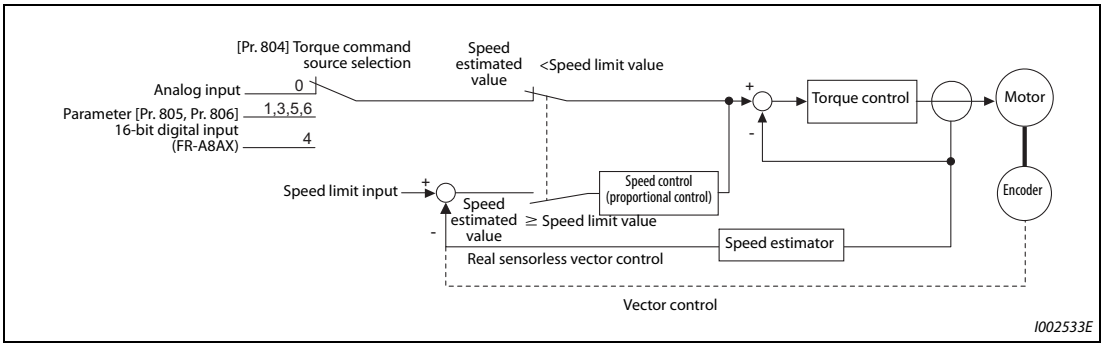


***Fig. 5-40:*** *Control block diagram*

**Torque command by analog input (terminal 1) (Pr. 804 = "0 (initial value)")**

- Torque commands are given using voltage (current) input to the terminal 1.
- Set Pr. 868 "Terminal 1 function assignment" = "3, 4" to use the terminal 1 for torque command inputs.
- Torque commands given using analog inputs can be calibrated by calibration parameters C16 (Pr. 919) to C19 (Pr. 920) (Refer to page 5-396.)

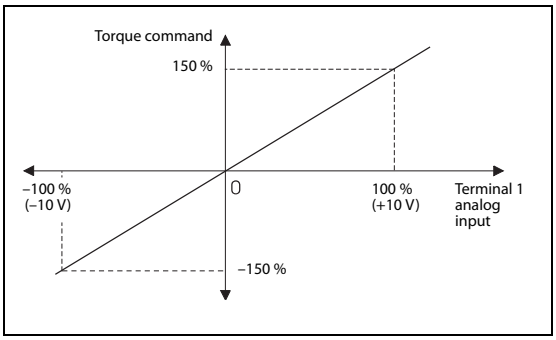


***Fig. 5-41:*** *Torque command by terminal 1*

**Torque command by parameter (Pr. 804 = "1")**

- Torque command values can be set by setting Pr. 805 "Torque command value (RAM)" and Pr. 806 "Torque command value (RAM, EEPROM)".
- For Pr. 805 or Pr. 806, regard 1000% as 0%, and set torque command by offset from 1000%. The following diagram shows relation between the Pr. 805 or Pr. 806 setting and the actual torque command value.
- To change torque command value frequently, write in Pr. 805. If values are written in Pr. 806 frequently, EEPROM life is shortened.
- When FR-A8NCE (CC-Link IE Field communication option) is mounted, torque command from FR-A8NCE is enabled.

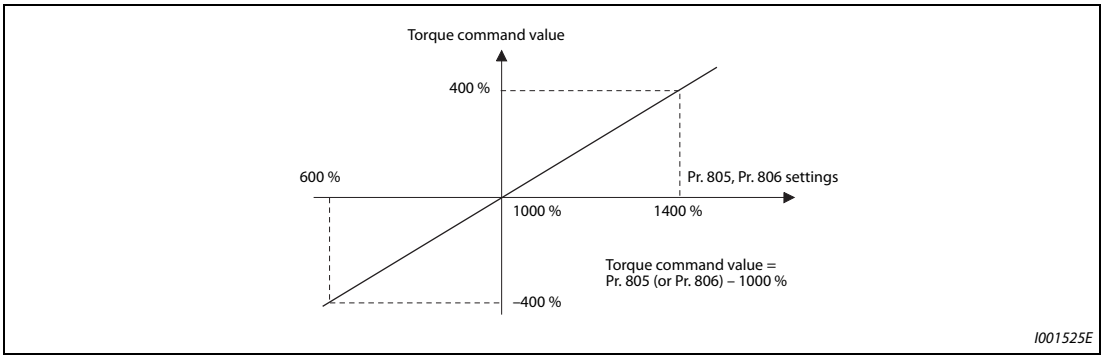


***Fig. 5-42:*** *Torque command using parameters*

**NOTES**

When the torque command is set by Pr. 805 (RAM), powering OFF the inverter will erase the changed parameter value. Therefore, the parameter set value will be the one saved by Pr. 806 (EEPROM) when the power is turned back on.

If providing torque command by parameter setting, set the speed limit value properly to prevent overspeeding. (Refer to page 5-133.)

**Torque command via CC-Link communication or PROFIBUS-DR communication (Pr. 804 = "3, 5, or 6")**

- Torque command values can be set via FR-A8NC (CC-Link communication option), FR-A8NCE (CC-Link IE Field communication option), or FR-A8NP (PROFIBUS-DR communication option).
- When Pr. 804 = "3 or 5", Pr. 807 "Speed limit selection" is invalid and Pr. 808 "Forward rotation speed limit/speed limit" and Pr. 809 "Reverse rotation speed limit/reverse-side speed limit" are valid.
- For the FR-A8NC, Pr. 807 is valid when the extended cyclic setting of CC-Link communication is quadruple or octuple. For the FR-A8NCE, Pr. 8 07 is always valid.)

| Pr. 804 setting | Torque command input | | | Setting range | Setting increments |
|---|---|---|---|---|---|
| | FR-A8NC | FR-A8NCE | FR-A8NP | | |
| 1 | Torque command by Pr. 805, Pr. 806 ① | Same operation as the setting value "3" | Torque command by Pr. 805, Pr. 806 ① | 600 to 1400 (–400% to 400%) | 1% |
| 3 | Torque command by Pr. 805, Pr. 806 ① | | | | |
| | Torque command by remote register (RWw1 or RWwC) | Torque command by remote register (RWw2 or RWw3) | Torque command by the buffer memory of PROFIBUS-DP (REF1 to 7) | | |
| 5 | Torque command by Pr. 805, Pr. 806 ① | | | –32768 to 32767 (complement of 2) (–327.68% to 327.67%) ② | 0.01% ② |
| | Torque command by remote register (RWw1 or RWwC) | Torque command by remote register (RWw2 or RWw3) | Torque command by the buffer memory of PROFIBUS-DP (REF1 to 7) | | |
| 6 | Torque command by Pr. 805, Pr. 806 ① | Same operation as setting value "5" | Torque command by Pr. 805, Pr. 806 ① | | |

① Can also be set from operation panel or parameter unit.

② Setting range if set by operation panel or parameter unit is "673 to 1327 (–327% to 327%)"; setting increment is 1%.

**NOTE** For the details of FR-A8NC, FR-A8NCE, FR-A8NP setting, refer to the Instruction Manual for the respective communication options.

**Torque command by 16-bit digital input (Pr. 804 = "4")**

- Execute torque command by 12-bit or 16-bit digital input using FR-A8AX (plug-in option).

**NOTE** For the details of FR-A8AX setting, refer to the Instruction Manual of FR-A8AX.

### Modifying the torque characteristics in the constant output area (Pr. 803)

- Because of the motor characteristics, torque is reduced at base frequency or higher. To generate a certain amount of torque at base frequency or higher, use Pr. 803 "Constant output range torque characteristic selection" = "1 or 11".
- Under torque control, the torque generated in the low-speed range is constant regardless of Pr. 803 setting.

| Pr. 803 setting | Torque characteristic in the constant output range |
|---|---|
| 0 (initial value), 10 | Constant motor output |
| 1, 11 | Constant torque |

***Tab. 5-49:*** *Torque characteristics in the constant output area*

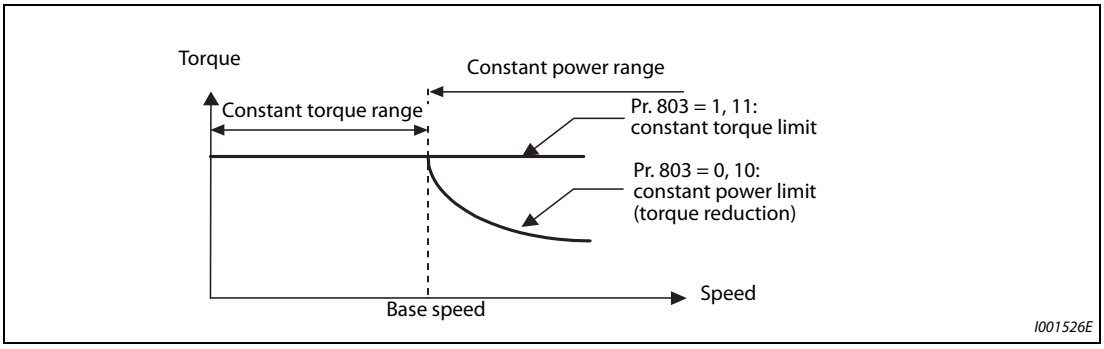


***Fig. 5-43:*** *Motor characteristic*

### Reverse selection of the torque command (Pr. 1114)

Whether the torque command polarity is reversed or not when the reverse rotation command (STR) is turned ON can be selected using Pr. 1114 "Torque command reverse selection".

| Pr. 1114 setting | Torque command polarity at STR signal ON (sign) |
|---|---|
| 0 | Not reversed |
| 1 (initial value) | Reversed |

***Tab. 5-50:*** *Reverse selection of the torque command*

| Parameters referred to | | | |
|---|---|---|---|
| Pr. 868 | Terminal 1 function assignment | => | page 5-381 |
| Calibration parameter C16 (Pr. 919) to C19 (Pr. 920) | (terminal 1 bias, gain torque) | => | page 5-396 |

## 5.4.5 Speed limit Sensorless Vector

When operating under torque control, motor overspeeding may occur if the load torque drops to a value less than the torque command value, etc. Set the speed limit value to prevent overspeeding.

If the actual speed exceeds the speed limit value, the control method switches from torque control to speed control, preventing overspeeding.

| Pr. | Name | Initial value | | Setting range | Description |
|---|---|---|---|---|---|
| | | FM | CA | | |
| 807<br>H410 | Speed limit selection | 0 | | 0 | Uses the speed command during speed control as the speed limit. |
| | | | | 1 | Sets speed limits for forward and reverse directions individually by using Pr. 808 and Pr. 809. |
| | | | | 2 | Forward/reverse rotation speed limit.<br>Applies speed limit by analog voltage input to the terminal 1.<br>Speed limit for forward/reverse side is switched by its polarity. |
| 808<br>H411 | Forward rotation speed limit/speed limit | 60 Hz | 50 Hz | 0 to 400 Hz | Sets the forward side speed limit. |
| 809<br>H412 | Reverse rotation speed limit/reverse-side speed limit | 9999 | | 0 to 400 Hz | Sets the reverse side speed limit. |
| | | | | 9999 | Pr. 808 setting value is effective. |
| 1113<br>H414 | Speed limit method selection | 0 | | 9999 | Speed limit mode 1 |
| | | | | 0 | Speed limit mode 2 |
| | | | | 1 | Speed limit mode 3 |
| | | | | 2 | Speed limit mode 4 |
| | | | | 10 | X93-OFF: Speed limit mode 3<br>X93-ON: Speed limit mode 4 |

### Speed limit method selection (Pr. 1113)

| Pr. 1113 setting | Speed limit method | Speed limit value |
|---|---|---|
| 9999 | Speed limit mode 1 | Forward rotation speed limit<br>Pr. 8 07 = 0: Speed commend under speed control<br>Pr. 8 07 = 1: Pr. 808<br>Pr. 807 = 2: Analog input at analog input of 0 to 10 V<br>Pr. 1 at analog input of –10 to 0 V<br>Reverse rotation speed limit<br>Pr. 807 = 0: Speed commend under speed control<br>Pr. 807 = 1: Pr.809 (Pr. 808 when Pr. 809 = "9999")<br>Pr. 807 = 2: Pr.1 at analog input of 0 to 10 V<br>Analog input at analog input of –10 to 0 V |
| 0 (initial value) | Speed limit mode 2 | Speed limit<br>Pr. 807=0 or 2: Speed commend under speed control<br>Pr. 807 = 1: Pr. 808<br>Reverse-side speed limit<br>Pr. 809 (Pr. 808 when Pr. 809 = "9999") |
| 1 | Speed limit mode 3 | |
| 2 | Speed limit mode 4 | |
| 10 | Switching by external terminals | X93-OFF: Speed limit mode 3<br>X93-ON: Speed limit mode 4 |

***Tab. 5-51:*** *Selecting the speed limit mode*

**Control block diagram (Speed limit mode 1)**

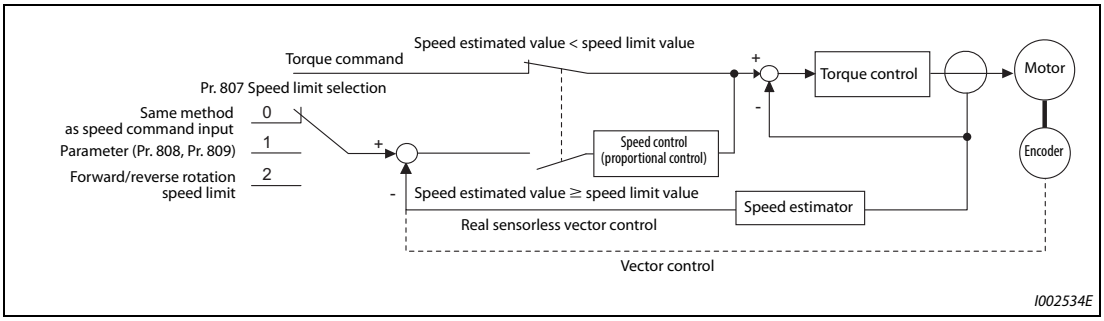


***Fig. 5-44:*** *Control block diagram*

**Using the speed command during speed control (Pr. 1113 = "9999", Pr. 807 = "0").**

- Speed limit is set by the same method as speed setting during speed control. (Speed setting by PU (FR-DU08/FR-PU07), multi-speed setting, plug-in option, etc.)
- At turn-ON of the start signal, the speed limit is raised from 0 Hz in accordance with the Pr. 7 "Acceleration time". At turn-OFF of the start signal, the speed limit is lowered from the speed at that point to the Pr. 10 "DC injection brake operation frequency" in accordance with the Pr. 8 "Deceleration time". Then the motor is stopped.

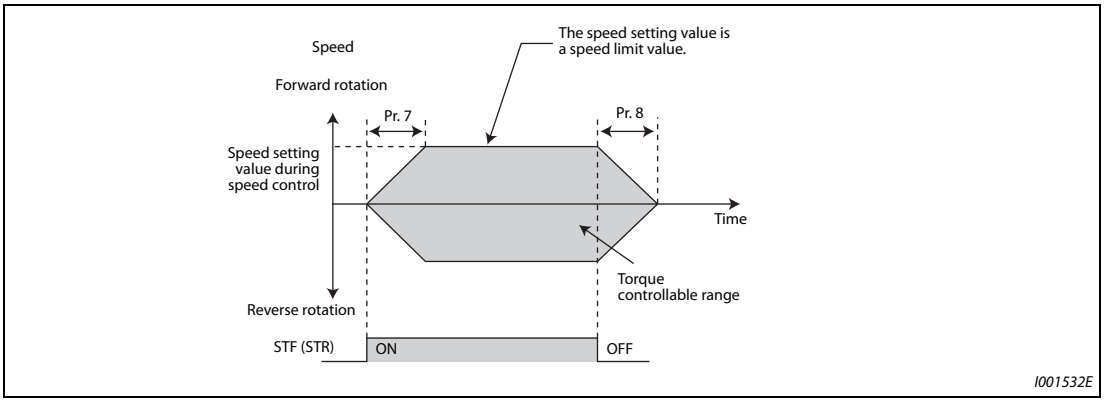


***Fig. 5-45:*** *Use the speed command for speed control*

**NOTES**

The second and third acceleration/deceleration time can be set.

When the speed limit command is larger than the Pr. 1 "Maximum frequency" setting value, speed limit value becomes the Pr. 1 setting value. When the speed limit command is smaller than Pr. 2 "Minimum frequency" setting value, speed limit value becomes the Pr. 2 setting value. Also when the speed limit command is smaller than the Pr. 13 "Starting frequency", the speed limit value becomes 0 Hz.

To perform speed limit by analog input, calibrate analog input terminals 1, 2 and 4. (Refer to page 5-388.)

To use analog inputs to perform speed control, turn the external signals (RH, RM, RL) OFF. If any of the external signals (RH, RM, RL) is ON, speed limit by multi-speed is enabled.

**Setting separately for forward and reverse rotation (Pr. 1113 = "9999", Pr. 807 = "1", Pr. 808, Pr. 809)**

Set the speed limit by Pr. 808 "Forward rotation speed limit/speed limit" for forward rotation, and by Pr. 809 "Reverse rotation speed limit/reverse-side speed limit" for reverse rotation.

When Pr. 809 = "9999 (initial value)", speed limit is determined by the setting value of Pr. 808 for both forward and reverse rotations.

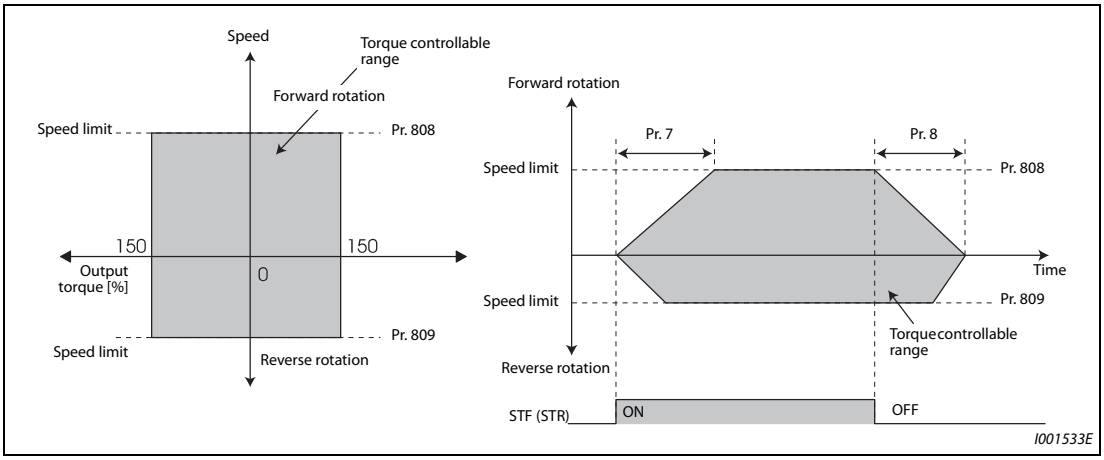


***Fig. 5-46:*** *Set the forward rotation and reverse rotation individually*

**Forward/reverse rotation speed limit using analog input (Pr. 1113 = "9999", Pr. 807 = "2")**

- When performing speed limit by analog inputs to terminal 1, speed limit can be switched between forward and reverse rotation by its voltage polarity.
- When Pr. 868 "Terminal 1 function assignment" = "5", forward/reverse speed limit is enabled.
- If 0 to 10 V is input, forward rotation speed limit is applied. Reverse rotation speed limit at this time is the value of Pr. 1 "Maximum frequency".
- If –10 to 0 V is input, reverse rotation speed limit is applied. Forward rotation speed limit at this time is the value of Pr. 1.
- Upper speed limit is the value of Pr. 1 for both forward and reverse rotations.

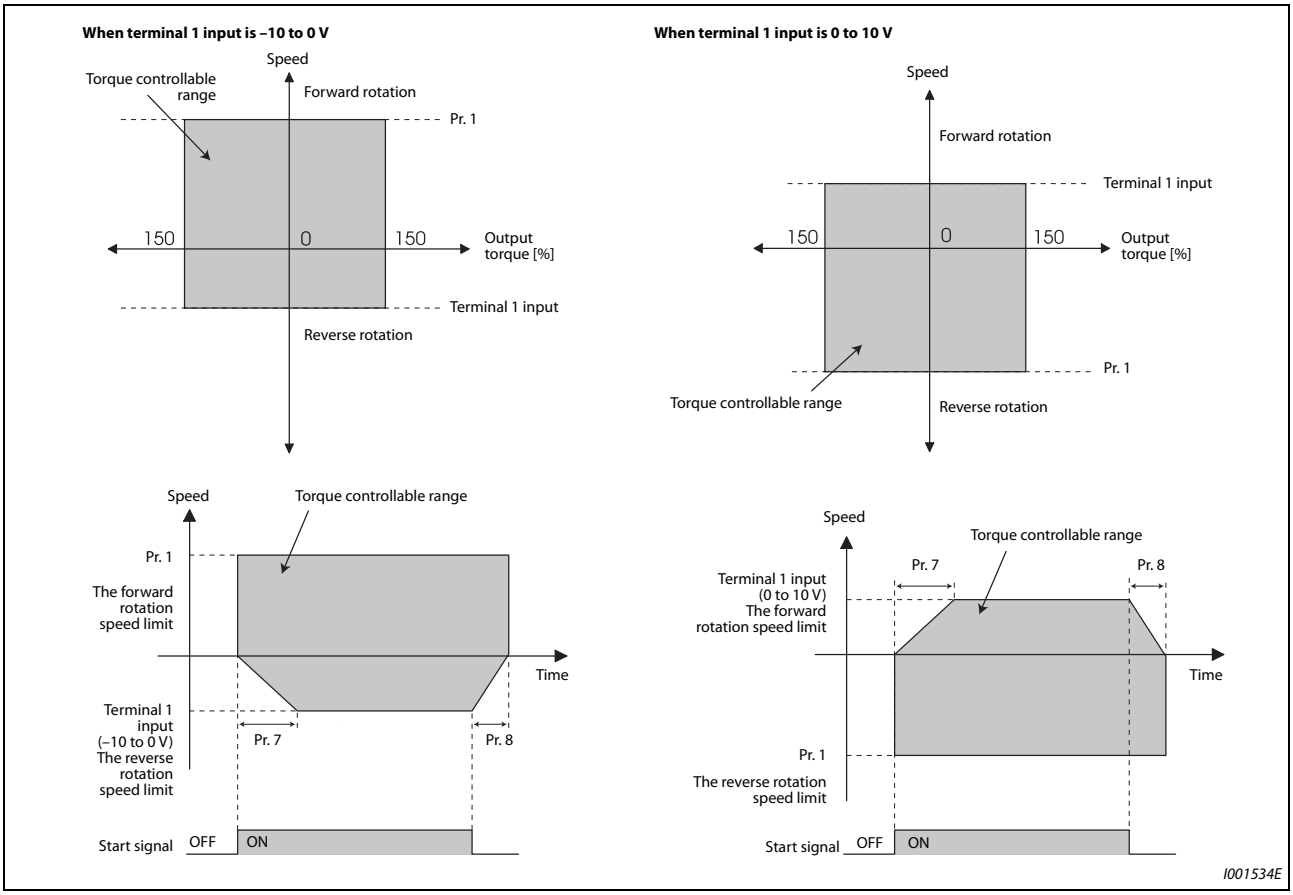


***Fig. 5-47:*** *Forward rotation/reverse rotation speed limit*

**NOTE** To perform speed limit by using the terminal 1, calibrate the terminal 1. (Refer to page 5-388.)

**Speed limit mode 2 (Pr. 1113 = "0", initial value)**

- Following the polarity change in the torque command, the polarity of the speed limit value changes. This prevents the speed from increasing in the torque polarity direction. (When the torque command is 0, the polarity of the speed limit value is positive.)
- When Pr. 807 "Speed limit selection" = "0 or 2", the speed setting value for speed control is applied for the speed limit. When Pr. 807 "Speed limit selection" = "1", the setting of Pr. 808 "Forward rotation speed limit/speed limit" is applied for the speed limit.
- When the load has reversed the rotation opposite to the torque polarity, the setting of Pr. 809 "Reverse rotation speed limit/reverse-side speed limit" is applied for the speed limit. (The speed limit value and reverse-side speed limit value are limited at Pr. 1 "Maximum frequency" (maximum 400 Hz under vector control).)

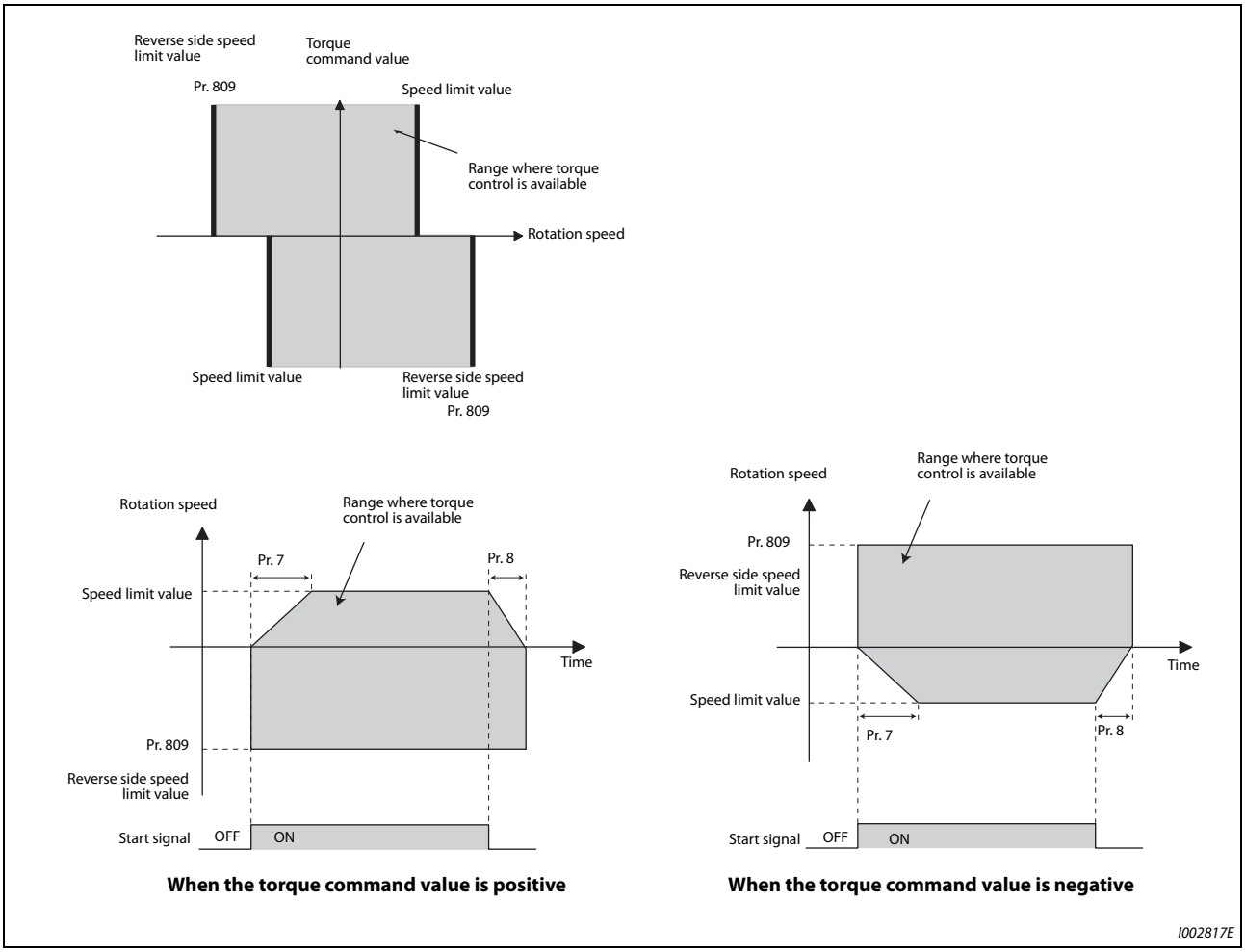


***Fig. 5-48:*** *Speed limit mode 2*

**Speed limit mode 3 (Pr. 1113 = "1")**

- Select this mode when the torque command is positive. The forward rotation command is for power driving (such as winding) and the reverse rotation command is for regenerative driving (such as unwinding). (Refer to each inside of the frames in the following figures.)
- When Pr. 807 "Speed limit selection" = "0 or 2", the speed setting value for speed control is applied for the speed limit. When Pr. 807 "Speed limit selection" = "1", the setting of Pr. 808 "Forward rotation speed limit/speed limit" is applied for the speed limit.
- When the torque command becomes negative, the setting of Pr. 809 "Reverse rotation speed limit/ reverse-side speed limit" is applied to prevent the speed from increasing in the reverse rotation direction. (The speed limit value and reverse-side speed limit value are limited at Pr. 1 "Maximum frequency" (maximum 400 Hz under vector control).

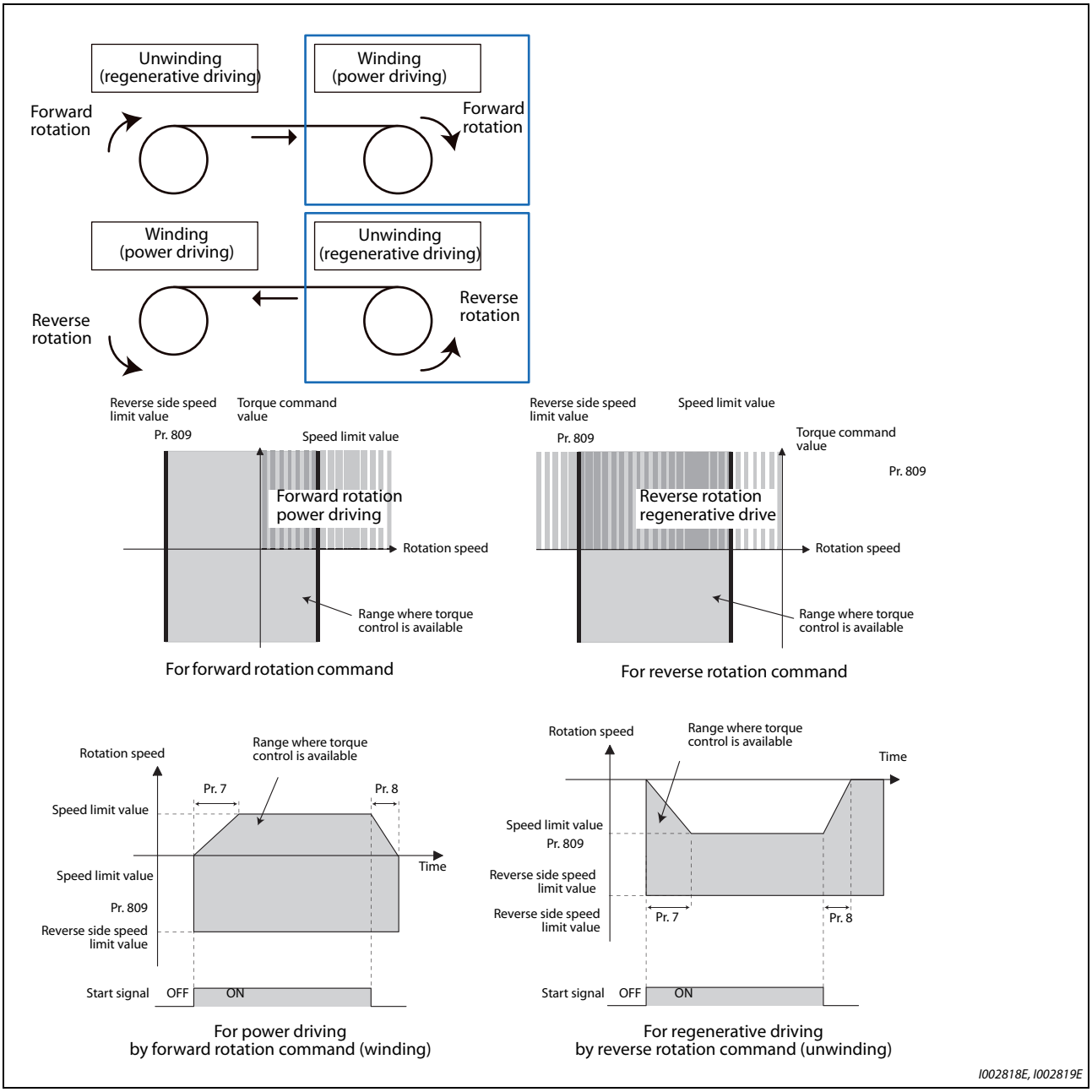


***Fig. 5-49:*** *Speed limit mode 3*

**Speed limit mode 4 (Pr. 1113 = "2")**

- Select this mode when the torque command is negative. The forward rotation command is for regenerative driving (such as unwinding) and the reverse rotation command is for power driving (such as winding). (Refer to each inside of the frames in the following figures.)
- When Pr. 807 "Speed limit selection" = "0 or 2", the speed setting value for speed control is applied for the speed limit. When Pr. 807 "Speed limit selection" = "1", the setting of Pr. 808 "Forward rotation speed limit/speed limit" is applied for the speed limit.
- When the torque command becomes positive, the setting of Pr. 809 "Reverse rotation speed limit/ reverse-side speed limit" is applied to prevent the speed from increasing in the forward rotation direction. (The speed limit value and reverse-side speed limit value are limited at Pr. 1 "Maximum frequency" (maximum 400 Hz under vector control).)

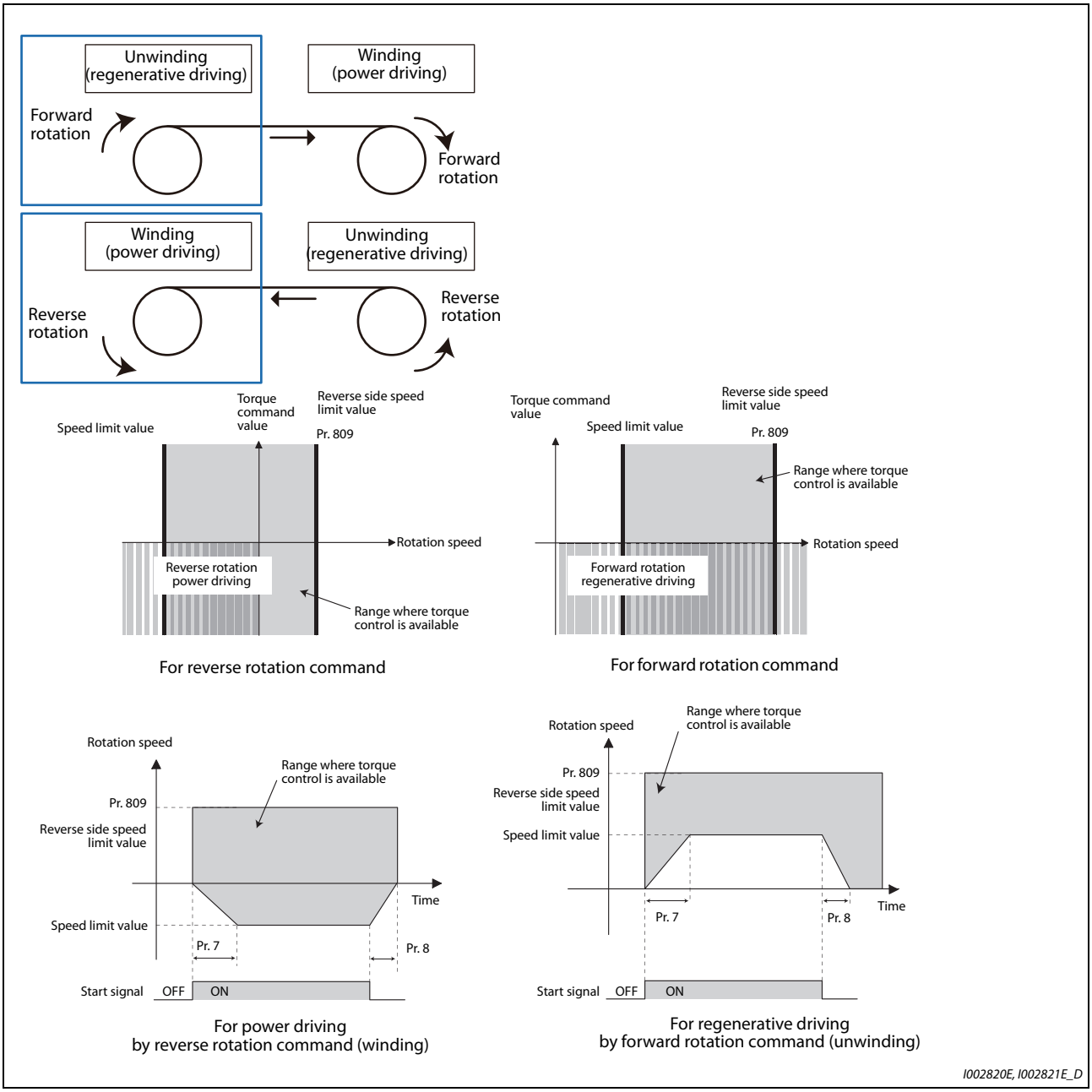


***Fig. 5-50:*** *Speed limit mode 3*

**Speed limit mode switching by external terminals (Pr. 1113 = "10")**

- The speed limit mode can be switch between 3 and 4 using the torque control selection (X93) signal.
- To assign the X93 signal, set "93" in any of Pr. 178 to Pr. 189 (input terminal function selection).

| X93 signal | Speed limit mode |
|---|---|
| OFF | Mode 3 (torque command = positive, Pr. 1113 = 1 or equivalent) |
| ON | Mode 4 (torque command = negative, Pr. 1113 = 2 or equivalent) |

***Tab. 5-52:*** *Function of torque control selection signal*

**NOTES**

During the speed limit operation, SL (SL) is displayed on the operation panel and OL signal is output.

OL signal is assigned to the terminal OL in the initial status. Set "3" in any of Pr. 190 to Pr. 196 (output terminal function selection) to assign the OL signal to another terminal. Changing the terminal assignment using Pr. 190 to Pr. 196 may affect the other functions. Set parameters after confirming the function of each terminal.

Changing the terminal assignment using Pr. 178 to Pr. 189 (input terminal function selection) may affect the other functions. Set parameters after confirming the function of each terminal.

| Parameters referred to | | | |
|---|---|---|---|
| Pr. 1 | Maximum frequency | => | page 5-300 |
| Pr. 2 | Minimum frequency | => | page 5-300 |
| Pr. 4 to Pr. 6, Pr. 24 to Pr. 27, Pr. 232 to Pr. 239 | (Multi-speed operation) | => | page 5-182 |
| Pr. 7 | Acceleration time | => | page 5-225 |
| Pr. 8 | Deceleration time | => | page 5-225 |
| Pr. 13 | Starting frequency | => | page 5-243 |
| Pr. 190 to Pr. 196 | (output terminal function selection) | => | page 5-350 |
| Pr. 868 | Terminal 1 function assignment | => | page 5-381 |
| Pr. 125, Pr. 126, C2 to C7, C12 to C15 | (frequency setting voltage (current) bias gain) | => | page 5-388 |

## 5.4.6 Torque control gain adjustment Sensorless Vector

Operation is normally stable enough in the initial setting, but some adjustments can be made if if abnormal vibration, noise or overcurrent occur for the motor or machinery.

| Pr. | Name | Initial value | Setting range | Description |
|---|---|---|---|---|
| 824<br>G213 | Torque control P gain 1 (current loop proportional gain) | 100% | 0 to 500% | Sets the current loop proportional gain.<br>100% is the equivalent to 2000 rad/s. |
| 825<br>G214 | Torque control integral time 1 (current loop integral time) | 5 ms | 0 to 500 ms | Sets current loop integral compensation time. |
| 834<br>G313 | Torque control P gain 2 | 9999 | 0 to 500% | Sets the current loop proportional gain when RT signal is ON. |
| | | | 9999 | The Pr. 824 setting is applied to the operation. |
| 835<br>G314 | Torque control integral time 2 | 9999 | 0 to 500 ms | Sets the current loop integral compensation time when RT signal is ON. |
| | | | 9999 | The Pr. 825 setting is applied to the operation. |

### Current loop proportional (P) gain adjustment (Pr. 824)

- The 100% current loop proportional gain is equivalent to 1000 rad/s during Real sensorless vector control, and to 1400 rad/s during vector control.
- For ordinary adjustment, try to set within the range of 50 to 500%.
- Set the proportional gain for during speed control.
- If setting value is large, changes in current command can be followed well and current fluctuation relative to external disturbance is smaller. If the setting value is however too large, it becomes unstable and high frequency torque pulse is produced.

### Current control integral time adjustment (Pr. 825)

- Set the integral time of current control during torque control.
- Torque response increases if set small; current however becomes unstable if set too small.
- If the setting value is small, it produces current fluctuation toward disturbance, decreasing time until it returns to original current value.

### Using two types of gain (Pr. 834, Pr. 835)

- Use Pr. 834 "Torque control P gain 2", Pr. 835 "Torque control integral time 2" if the gain setting needs to be switched according to application or if multiple motors are switched by a single inverter.
- The Pr. 834 and Pr. 835 settings are valid when the second function selection (RT) signal is ON.

**NOTES**

The RT signal is a second function selection signal. The RT signal also enables other second functions. (Refer to page 5-415.)

RT signal is assigned to the terminal RT in the initial status. Set "3" in any of Pr. 178 to Pr. 189 (input terminal function selection) to assign the RT signal to another terminal.

**Adjustment procedure**

Adjust if any of phenomena such as unusual vibration, noise, current or overcurrent is produced by the motor or machinery.

① Change the Pr. 824 setting while checking the conditions.

② If it cannot be adjusted well, change the Pr. 825 setting, and perform ① again.

| Adjustment method | |
|---|---|
| Set Pr. 824 lower and Pr. 825 longer. First, lower Pr. 824 and then check of there is still any abnormal vibration, noise or current from the motor. If it still requires improvement, make Pr. 825 longer. | |
| Pr. 824 | Lower the setting by 10% increments and set a value that is approximately 0.8 to 0.9 times the setting value, immediately before abnormal noise or current is improved.<br>If set too low, current ripple is produced and produces a sound from the motor that synchronizes with it. |
| Pr. 825 | Lengthen the current setting by doubling it each time and set a value that is approximately 0.8 to 0.9 times the setting value, immediately before abnormal noise or current is improved.<br>If set too long, current ripple is produced and produces a sound from the motor that synchronizes with it. |

***Tab. 5-53:*** *Adjustment method for setting parameter 824 and 825*

## 5.4.7 Troubleshooting in torque control Sensorless Vector

| | Condition | Cause | Countermeasure |
|---|---|---|---|
| 1 | Torque control does not operate properly. | • There is incorrect phase sequence between the motor wiring and encoder wiring. | • Check the wiring. (Refer to page 2-67.) |
| | | • Pr. 800 "Control method selection" setting is applied. | • Check the setting of Pr. 800. (Refer to page 5-55.) |
| | | • Speed limit value has not been input. | • Set speed limit value. (If speed limit value is not input, it becomes 0 Hz by default and the motor does not run.) |
| | | • Torque command varies. | • Check that the torque command sent from the controller is correct.<br>• Set Pr. 72 "PWM frequency selection" lower.<br>• Set Pr. 826 "Torque setting filter 1" higher. |
| | | • The torque command and the torque recognized by the inverter are different. | • Re-calibrate the C16 "Terminal 1 bias command (torque/magnetic flux)", C17 "Terminal 1 bias (torque/magnetic flux)", C18 "Terminal 1 gain command (torque/magnetic flux)", and C19 "Terminal 1 gain (torque/magnetic flux)". (Refer to page 5-396.) |
| | | • Torque fluctuation due to motor temperature variation | • Select the magnetic flux observer by Pr. 95 "Online auto tuning selection". (Refer to page 5-451.) |
| 2 | When a small torque command is given, the motor rotates in a direction opposite to the start signal. | • Torque offset calibration is inaccurate. | • Re-calibrate C16 "Terminal 1 bias command (torque/magnetic flux)" and C17 "Terminal 1 bias (torque/magnetic flux)". (Refer to page 5-396.) |
| 3 | Torque control cannot operate normally during acceleration/ deceleration.<br>The motor vibrates. | • Speed limit is operating. (Speed limit may operate because the speed limit value will increase or decrease according to acceleration/deceleration time setting of Pr. 7 and Pr. 8 when Pr. 807 = "0 or 2".) | • Set the acceleration/deceleration time shorter. Alternatively, set acceleration/deceleration time to "0". (Speed limit during acceleration/deceleration is determined by the speed limit for constant speed.) |
| 4 | Output torque is nonlinear for the torque command. | • Torque shortage | • Return Pr. 854 "Excitation ratio" to the initial value. |

***Tab. 5-54:*** *Troubleshooting during torque control*

| Parameters referred to | | | |
|---|---|---|---|
| Pr. 72 | PWM frequency selection | => | page 5-211 |
| Pr. 178 to Pr. 189 | (input terminal function selection) | => | page 5-409 |
| Pr. 800 | Control method selection | => | page 5-55 |
| Pr. 807 | Speed limit selection | => | page 5-143 |
| C16 to C19 | (torque setting voltage (current) bias/gain) | => | page 5-396 |

## 5.4.8 Torque control by variable-current limiter control

By changing the torque limit value for speed control, torque control can be performed.

| Pr. | Name | Initial value | Setting range | Description | |
|---|---|---|---|---|---|
| 800<br>G200 | Control method selection | 20 | 6 | Vector control | Variable-current limiter torque control |
| | | | 106 | Vector control (fast-response operation) | |
| | | | 0 to 5, 100 to 105 | Vector control | |
| | | | 9, 109 | Vector control test operation | |
| | | | 10 to 12, 100 to 112 | Real sensorless vector control | |
| | | | 13, 14, 113, 114 | PM sensorless vector control | |
| | | | 20 | V/F control (Advanced magnetic flux vector control, PM sensorless vector control) | |

- By adding the bias amount to the line speed (master speed) as the speed command value to saturate the speed controller and changing the torque limit value, torque control can be performed.
- For a positive bias amount (the speed command value faster than the line speed), power driving is applied, and for a negative bias amount (the speed command value slower than the line speed), regenerative driving is applied.
- Speed control is the basic control. For how to set the speed command and torque limit value, refer to speed control (page 174).

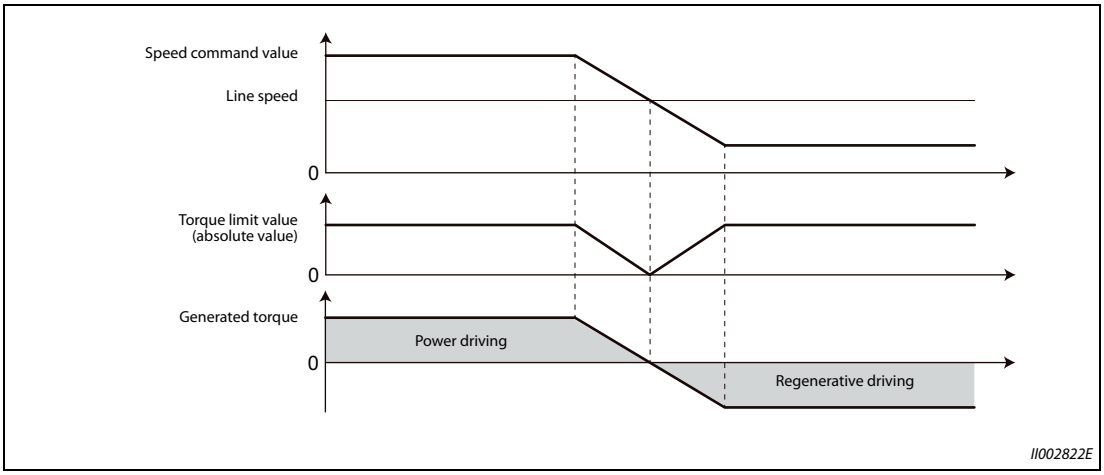


***Fig. 5-51:*** *Effect of speed command value and torque limit value on generated torque*

- Under speed control with Pr. 800 ="0 or100", when the speed command value is changed by an external force, the torque limit is invalid at a change in the speed command value to adjust the internal speed command value to the actual speed.

- Under variable speed limiter control with Pr. 800="6 or 106", the process to adjust the speed command value to the actual speed is not performed, and thus the torque limit remains valid. This prevents torque from suddenly changing at a speed change.

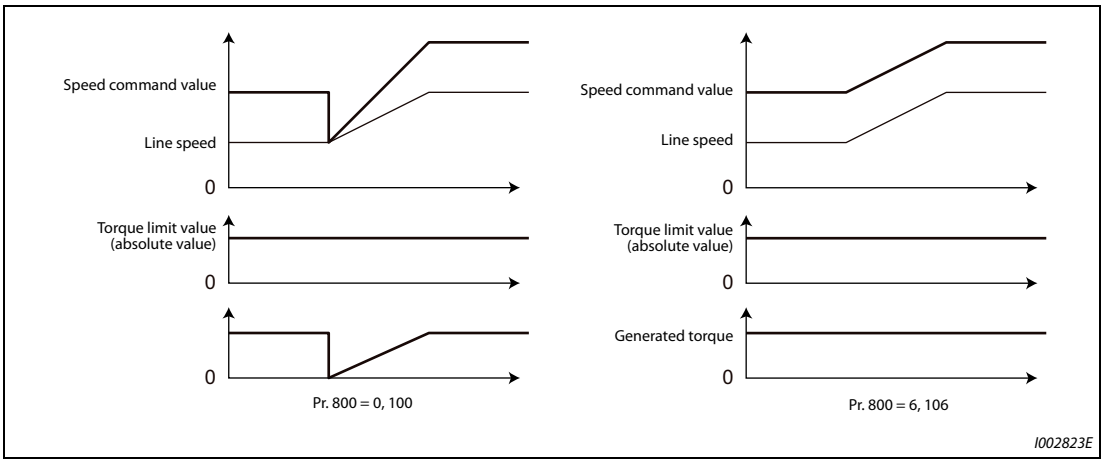


***Fig. 5-52:*** *Generated torque depending on Pr. 800 setting*

**NOTE**

When Pr. 800 = "6 or 106" (torque control by a variable-current limiter), Pr. 690 "Deceleration check time" and Pr. 873 "Speed limit" are ignored.

| **Parameters referred to** | | | |
|---|---|---|---|
| Pr. 690 | Deceleration check time | => | page 5-115 |
| Pr. 873 | Speed limit | => | page 5-115 |
| Pr. 800 | Control method selection | => | page 5-55 |

# 5.5 Position control under vector control and PM sensorless vector control

| Purpose | Parameter to set | | | Refer to page |
|---|---|---|---|---|
| To perform Simple position control by setting parameters | To give parameter position command | P.B000, P.B020 to P.B050, P.B101, P.B120 to P.B188, P.B190 to P.B195 | Pr. 419, Pr. 464 to Pr. 494, Pr. 1221 to Pr. 1290, Pr. 1292, Pr. 1293 | 5-129 |
| To perform position control by pulse input to the inverter | Simple pulse train position command | P.B000, P.B009 to P.B011 | Pr. 419, Pr. 428 to Pr. 430 | 5-166 |
| To adjust the gear ratio of the motor and machine | Electronic gear settings | P.B001, P.B002, P.B005 | Pr. 420, Pr. 421,Pr. 424 | 5-171 |
| To improve the precision of the position control | Setting the position adjustment parameters | P.B007, P.B008, P.B192 to P.B195 | Pr. 426, Pr. 427, Pr. 1294 to Pr. 1297 | 5-173 |
| | Position control gain adjustment | P.B003, P.B004, P.B006, P.B012, P.G220, P.G224, P.C114 | Pr. 422, Pr. 423, Pr. 425, Pr. 446, Pr. 828, Pr. 877, Pr. 880 | 5-175 |

## 5.5.1 About position control Vector PM

- In position control, speed commands, which are calculated to eliminate the difference between the command pulse (parameter setting) and the estimated feedback pulse, are output to rotate the motor.
- This inverter can perform simple positioning by contact input or position control by simple pulse input to the inverter.

### Control block diagram

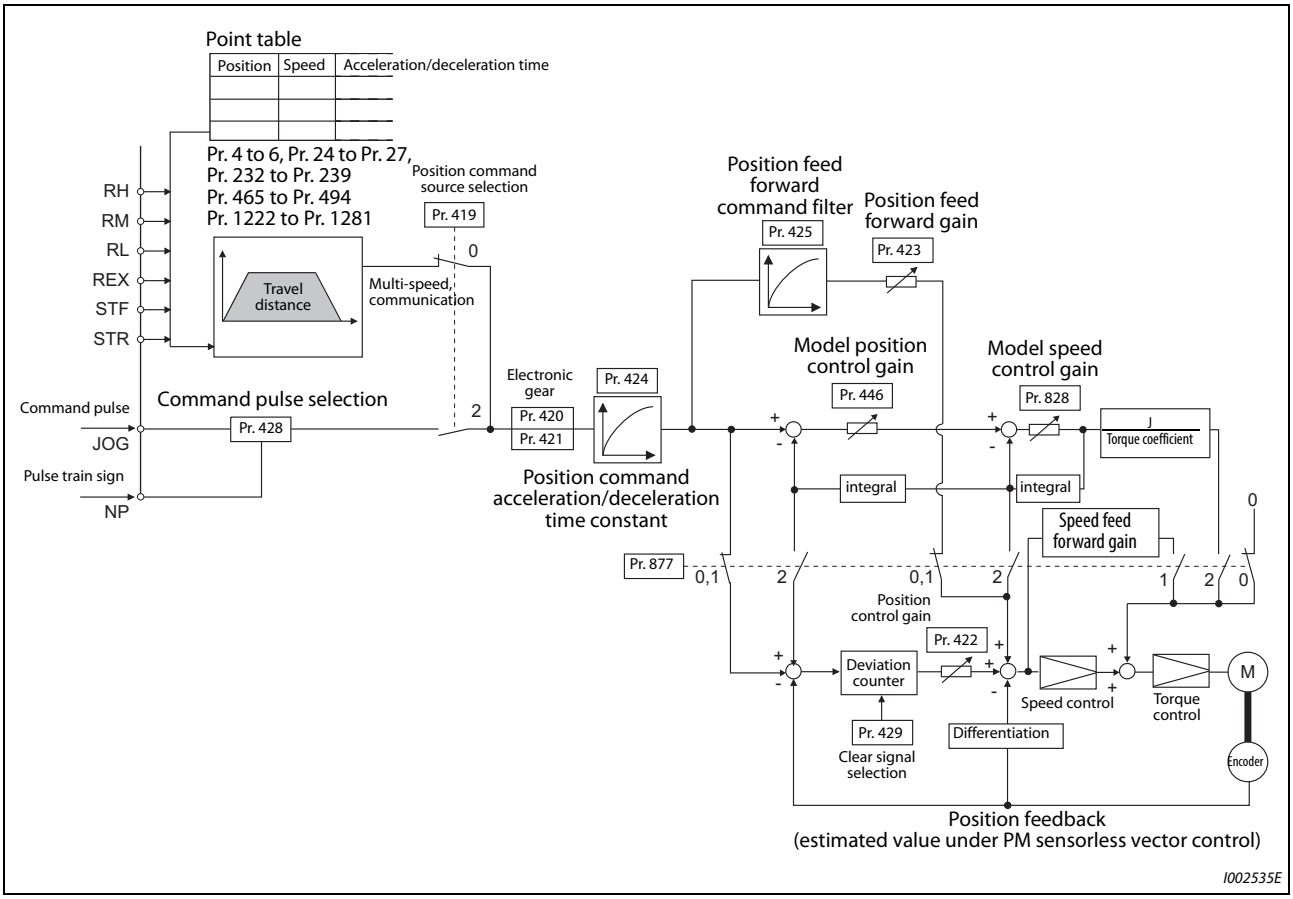


***Fig. 5-53:*** *Control block diagram*

### Operation example

- Calculate the speed command so that the difference between the number of pulses of the internal pulse train (if Pr. 419 = "0", command pulses are used in the inverter from the number of pulses defined by parameters (Pr. 465 to Pr. 494)) and the number of pulses in the feedback from the motor terminal encoder (estimated value when PM sensorless vector control is used) is 0, and then rotate the motor based on the calculation.
  - Once a pulse train is input, pulses are accumulated in the deviation counter, and the droop pulses in this counter become position control pulses and speed command.
  - When the motor starts to rotate in response to the speed command from the inverter, feedback pulses are also generated by the encoder at the same time. Subtract the encoder feedback pulses or feedback estimate value from the droop pulses in the deviation counter. The deviation counter keeps rotating the motor while keeping a certain droop amount.
  - If the command pulse input stops, the amount of droop pulses in the deviation counter decreases and thus the speed slows down. When there is no droop pulse, the motor stops.
  - If the number of droop pulses becomes smaller than the value set in Pr. 426 "In-position width", the system determines that positioning is complete and the positioning completion signal

(Y36) is turned ON.

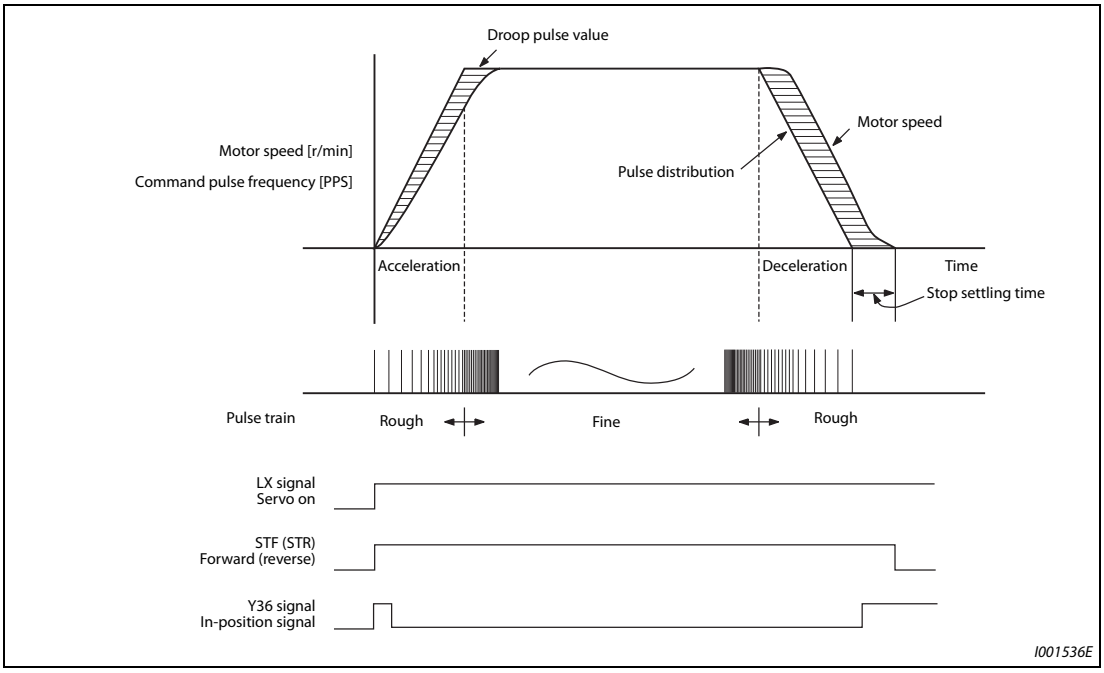


***Fig. 5-54:*** *Positioning*

- The pulses are slow during motor acceleration. The pulses are fast at full speed. The pulses become slower during deceleration, and eventually becomes 0 and the motor stops a little after the command pulse. This time difference is necessary to ensure stop accuracy and is called stop setting time.

**NOTES**

To assign the servo ON signal (LX), set "23" in any of Pr. 178 to Pr. 189 (input terminal function selection).

To assign the positioning completion signal (Y36), set "36" in any of Pr. 190 to Pr. 196 (output terminal function selection).

Changing the terminal assignment using Pr. 178 to Pr. 189 or Pr. 190 to Pr. 196 may affect other functions. Set parameters after confirming the function of each terminal.

| **Parameters referred to** | | | |
|---|---|---|---|
| Pr. 178 to Pr. 189 | (input terminal function selection) | => | page 5-409 |
| Pr. 190 to Pr. 196 | (output terminal function selection) | => | page 5-350 |

## 5.5.2 Setting procedure of vector control (position control) Vector

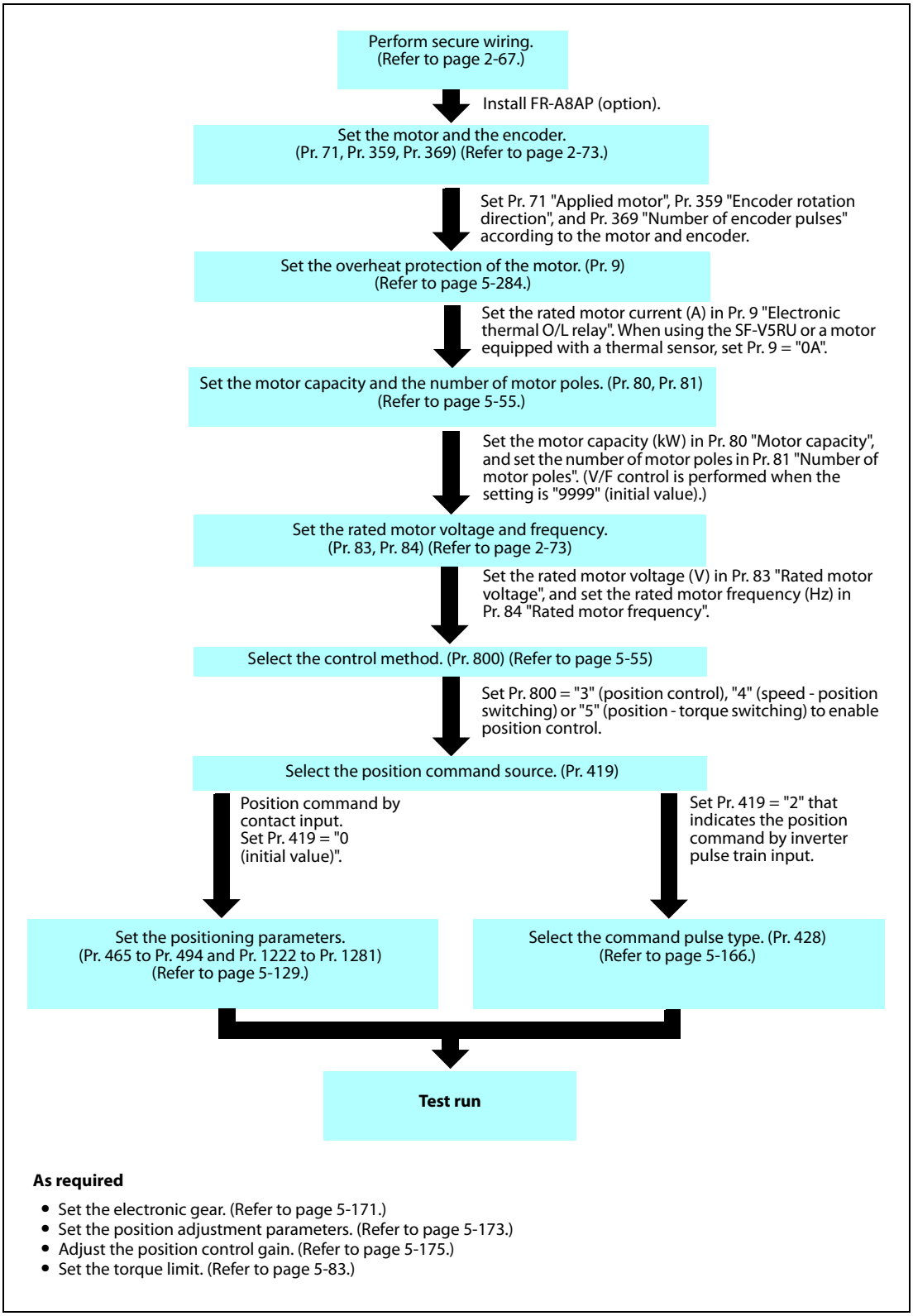


***Fig. 5-55:*** *Setting procedure of vector control (position control)*

**NOTE** The carrier frequency is limited during vector control. (Refer to page 5-211.)

### 5.5.3 Set the procedure of PM sensorless vector control (position control) PM

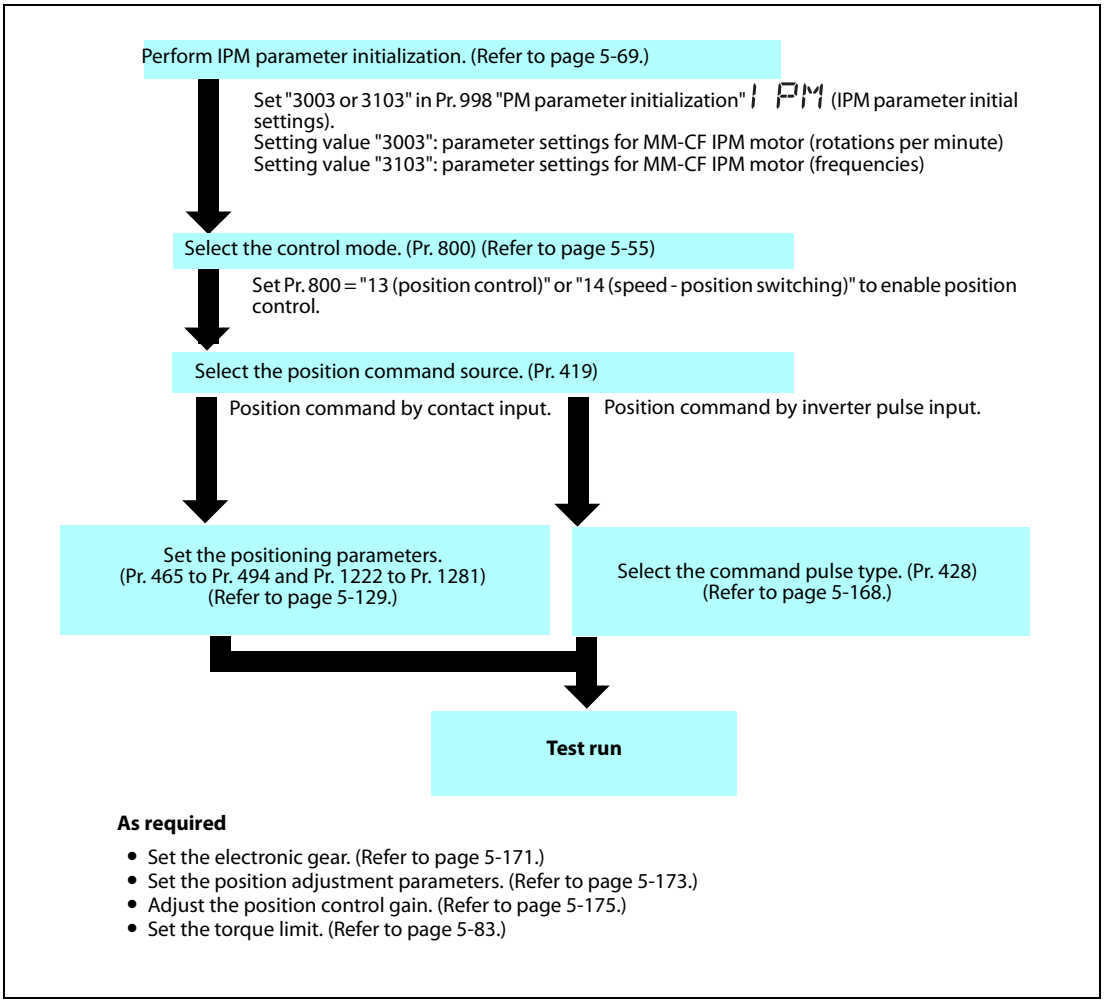


***Fig. 5-56:*** *Set the procedure of PM sensorless vector control (position control)*

**NOTES**

The carrier frequency is limited during PM sensorless vector control. (Refer to page 5-211.)

Position deviation may occur due to motor temperature changes. In such case, shut off the inverter outputs, and restart.

Perform position control under PM sensorless vector control only when using an MM-CF IPM motor with the low-speed high torque characteristic. (Pr. 788 = "9999 (initial value)")

Position control is performed on the assumption of 4096 pulses/motor rotation.
The positioning accuracy is 200 pulses/rev for 1.5K or lower, and 100 pulses/rev for 2K or higher (under no load).

## 5.5.4 Simple positioning function by parameters Vector PM

Set positioning parameters such as the number of pulses (position) and acceleration/deceleration time in advance to create a point table (point table method). Positioning operation is performed by selecting the point table.

| Pr. | Name | Initial value | Setting range | Description |
|---|---|---|---|---|
| 419<br>B000 | Position command source selection | 0 | 0 | Simple position control by point tables (position command by setting parameters). |
| | | | 2 | Simple pulse train command by inverter pulse input. |
| 464<br>B020 | Digital position control sudden stop deceleration time | 0 s | 0 to 360 s | Set the time period until the inverter stops when the forward rotation (reverse rotation) command is turned OFF with the position feed forward function. |
| 465<br>B021 | First target position lower 4 digits | 0 | 0 to 9999 | Set the target position of point table 1. |
| 466<br>B022 | First target position upper 4 digits | 0 | 0 to 9999 | |
| 467<br>B023 | Second target position lower 4 digits | 0 | 0 to 9999 | Set the target position of point table 2. |
| 468<br>B024 | Second target position upper 4 digits | 0 | 0 to 9999 | |
| 469<br>B025 | Third target position lower 4 digits | 0 | 0 to 9999 | Set the target position of point table 3. |
| 470<br>B026 | Third target position upper 4 digits | 0 | 0 to 9999 | |
| 471<br>B027 | Fourth target position lower 4 digits | 0 | 0 to 9999 | Set the target position of the point table 4. |
| 472<br>B028 | Fourth target position upper 4 digits | 0 | 0 to 9999 | |
| 473<br>B029 | Fifth target position lower 4 digits | 0 | 0 to 9999 | Set the target position of the point table 5. |
| 474<br>B030 | Fifth target position upper 4 digits | 0 | 0 to 9999 | |
| 475<br>B031 | Sixth target position lower 4 digits | 0 | 0 to 9999 | Set the target position of the point table 6. |
| 476<br>B032 | Sixth target position upper 4 digits | 0 | 0 to 9999 | |
| 477<br>B033 | Seventh target position lower 4 digits | 0 | 0 to 9999 | Set the target position of the point table 7. |
| 478<br>B034 | Seventh target position upper 4 digits | 0 | 0 to 9999 | |
| 479<br>B035 | Eighth target position lower 4 digits | 0 | 0 to 9999 | Set the target position of the point table 8. |
| 480<br>B036 | Eighth target position upper 4 digits | 0 | 0 to 9999 | |
| 481<br>B037 | Ninth target position lower 4 digits | 0 | 0 to 9999 | Set the target position of the point table 9. |
| 482<br>B038 | Ninth target position upper 4 digits | 0 | 0 to 9999 | |
| 483<br>B039 | Tenth target position lower 4 digits | 0 | 0 to 9999 | Set the target position of the point table 10. |
| 484<br>B040 | Tenth target position upper 4 digits | 0 | 0 to 9999 | |

| Pr. | Name | Initial value | Setting range | Description |
|---|---|---|---|---|
| 485<br>B041 | Eleventh target position lower 4 digits | 0 | 0 to 9999 | Set the target position of the point table 11. |
| 486<br>B042 | Eleventh target position upper 4 digits | 0 | 0 to 9999 | |
| 487<br>B043 | Twelfth target position lower 4 digits | 0 | 0 to 9999 | Set the target position of the point table 12. |
| 488<br>B044 | Twelfth target position upper 4 digits | 0 | 0 to 9999 | |
| 489<br>B045 | Thirteenth target position lower 4 digits | 0 | 0 to 9999 | Set the target position of the point table 13. |
| 490<br>B046 | Thirteenth target position upper 4 digits | 0 | 0 to 9999 | |
| 491<br>B047 | Fourteenth target position lower 4 digits | 0 | 0 to 9999 | Set the target position of the point table 14. |
| 492<br>B048 | Fourteenth target position upper 4 digits | 0 | 0 to 9999 | |
| 493<br>B049 | Fifteenth target position lower 4 digits | 0 | 0 to 9999 | Set the target position of the point table 15. |
| 494<br>B050 | Fifteenth target position upper 4 digits | 0 | 0 to 9999 | |
| 1221<br>B101 | Start command edge detection selection | 0 | 0 | Turning OFF the forward (reverse) rotation command will stop the motor in the setting time of Pr. 464. |
| | | | 1 | Position forward is continued even if the forward (reverse) rotation command is turned OFF. |
| 1222<br>B120 | First positioning acceleration time | 5 s | 0.01 to 360 s | Set the characteristics of the point table 1. |
| 1223<br>B121 | First positioning deceleration time | 5 s | 0.01 to 360 s | |
| 1224<br>B122 | First positioning dwell time | 0 ms | 0 to 20000 ms | |
| 1225<br>B123 | First positioning sub-function | 10 | 0, 1, 10, 11, 100, 101, 110, 111 | |
| 1226<br>B124 | Second positioning acceleration time | 5 s | 0.01 to 360 s | Set the characteristics of the point table 2. |
| 1227<br>B125 | Second positioning deceleration time | 5 s | 0.01 to 360 s | |
| 1228<br>B126 | Second positioning dwell time | 0 ms | 0 to 20000 ms | |
| 1229<br>B127 | Second positioning sub-function | 10 | 0, 1, 10, 11, 100, 101, 110, 111 | |
| 1230<br>B128 | Third positioning acceleration time | 5 s | 0.01 to 360 s | Set the characteristics of the point table 3. |
| 1231<br>B129 | Third positioning deceleration time | 5 s | 0.01 to 360 s | |
| 1232<br>B130 | Third positioning dwell time | 0 ms | 0 to 20000 ms | |
| 1233<br>B131 | Third positioning sub-function | 10 | 0, 1, 10, 11, 100, 101, 110, 111 | |

| Pr. | Name | Initial value | Setting range | Description |
|---|---|---|---|---|
| 1234<br>B132 | Fourth positioning acceleration time | 5 s | 0.01 to 360 s | Set the characteristics of the point table 4. |
| 1235<br>B133 | Fourth positioning deceleration time | 5 s | 0.01 to 360 s | |
| 1236<br>B134 | Fourth positioning dwell time | 0 ms | 0 to 20000 ms | |
| 1237<br>B135 | Fourth positioning sub-function | 10 | 0, 1, 10, 11, 100, 101, 110, 111 | |
| 1238<br>B136 | Fifth positioning acceleration time | 5 s | 0.01 to 360 s | Set the characteristics of the point table 5. |
| 1239<br>B137 | Fifth positioning deceleration time | 5 s | 0.01 to 360 s | |
| 1240<br>B138 | Fifth positioning dwell time | 0 ms | 0 to 20000 ms | |
| 1241<br>B139 | Fifth positioning sub-function | 10 | 0, 1, 10, 11, 100, 101, 110, 111 | |
| 1242<br>B140 | Sixth positioning acceleration time | 5 s | 0.01 to 360 s | Set the characteristics of the point table 6. |
| 1243<br>B141 | Sixth positioning deceleration time | 5 s | 0.01 to 360 s | |
| 1244<br>B142 | Sixth positioning dwell time | 0 ms | 0 to 20000 ms | |
| 1245<br>B143 | Sixth positioning sub-function | 10 | 0, 1, 10, 11, 100, 101, 110, 111 | |
| 1246<br>B144 | Seventh positioning acceleration time | 5 s | 0.01 to 360 s | Set the characteristics of the point table 7. |
| 1247<br>B145 | Seventh positioning deceleration time | 5 s | 0.01 to 360 s | |
| 1248<br>B146 | Seventh positioning dwell time | 0 ms | 0 to 20000 ms | |
| 1249<br>B147 | Seventh positioning sub-function | 10 | 0, 1, 10, 11, 100, 101, 110, 111 | |
| 1250<br>B148 | Eighth positioning acceleration time | 5 s | 0.01 to 360 s | Set the characteristics of the point table 8. |
| 1251<br>B149 | Eighth positioning deceleration time | 5 s | 0.01 to 360 s | |
| 1252<br>B150 | Eighth positioning dwell time | 0 ms | 0 to 20000 ms | |
| 1253<br>B151 | Eighth positioning sub-function | 10 | 0, 1, 10, 11, 100, 101, 110, 111 | |
| 1254<br>B152 | Ninth positioning acceleration time | 5 s | 0.01 to 360 s | Set the characteristics of the point table 9. |
| 1255<br>B153 | Ninth positioning deceleration time | 5 s | 0.01 to 360 s | |
| 1256<br>B154 | Ninth positioning dwell time | 0 ms | 0 to 20000 ms | |
| 1257<br>B155 | Ninth positioning sub-function | 10 | 0, 1, 10, 11, 100, 101, 110, 111 | |
| 1258<br>B156 | Tenth positioning acceleration time | 5 s | 0.01 to 360 s | Set the characteristics of the point table 10. |
| 1259<br>B157 | Tenth positioning deceleration time | 5 s | 0.01 to 360 s | |
| 1260<br>B158 | Tenth positioning dwell time | 0 ms | 0 to 20000 ms | |
| 1261<br>B159 | Tenth positioning sub-function | 10 | 0, 1, 10, 11, 100, 101, 110, 111 | |

| Pr. | Name | Initial value | Setting range | Description |
|---|---|---|---|---|
| 1262<br>B160 | Eleventh positioning acceleration time | 5 s | 0.01 to 360 s | Set the characteristics of the point table 11. |
| 1263<br>B161 | Eleventh positioning deceleration time | 5 s | 0.01 to 360 s | |
| 1264<br>B162 | Eleventh positioning dwell time | 0 ms | 0 to 20000 ms | |
| 1265<br>B163 | Eleventh positioning sub-function | 10 | 0, 1, 10, 11, 100, 101, 110, 111 | |
| 1266<br>B164 | Twelfth positioning acceleration time | 5 s | 0.01 to 360 s | Set the characteristics of the point table 12. |
| 1267<br>B165 | Twelfth positioning deceleration time | 5 s | 0.01 to 360 s | |
| 1268<br>B166 | Twelfth positioning dwell time | 0 ms | 0 to 20000 ms | |
| 1269<br>B167 | Twelfth positioning sub-function | 10 | 0, 1, 10, 11, 100, 101, 110, 111 | |
| 1270<br>B168 | Thirteenth positioning acceleration time | 5 s | 0.01 to 360 s | Set the characteristics of the point table 13. |
| 1271<br>B169 | Thirteenth positioning deceleration time | 5 s | 0.01 to 360 s | |
| 1272<br>B170 | Thirteenth positioning dwell time | 0 ms | 0 to 20000 ms | |
| 1273<br>B171 | Thirteenth positioning sub-function | 10 | 0, 1, 10, 11, 100, 101, 110, 111 | |
| 1274<br>B172 | Fourteenth positioning acceleration time | 5 s | 0.01 to 360 s | Set the characteristics of the point table 14. |
| 1275<br>B173 | Fourteenth positioning deceleration time | 5 s | 0.01 to 360 s | |
| 1276<br>B174 | Fourteenth positioning dwell time | 0 ms | 0 to 20000 ms | |
| 1277<br>B175 | Fourteenth positioning sub-function | 10 | 0, 1, 10, 11, 100, 101, 110, 111 | |
| 1278<br>B176 | Fifteenth positioning acceleration time | 5 s | 0.01 to 360 s | Set the characteristics of the point table 15. |
| 1279<br>B177 | Fifteenth positioning deceleration time | 5 s | 0.01 to 360 s | |
| 1280<br>B178 | Fifteenth positioning dwell time | 0 ms | 0 to 20000 ms | |
| 1281<br>B179 | Fifteenth positioning sub-function | 10 | 0, 10, 100, 110 | |
| 1282<br>B180 | Home position return method selection | 4 | 0 | Dog type |
| | | | 1 | Count type |
| | | | 2 | Data set type |
| | | | 3 | Stopper type |
| | | | 4 | Ignoring the home position (servo-ON position as the home position) |
| | | | 5 | Dog type back end reference |
| | | | 6 | Count type front end reference |
| 1283<br>B181 | Home position return speed | 2 Hz | 0 to 30 Hz | Set the speed for the home position return operation. |
| 1284<br>B182 | Home position return creep speed | 0.5 Hz | 0 to 10 Hz | Set the speed immediately before the home position return. |
| 1285<br>B183 | Home position shift amount lower 4 digits | 0 | 0 to 9999 | Set the home position shift distance.<br>Home position shift distance<br>= Pr. 1286 × 10000 + Pr. 1285 |
| 1286<br>B184 | Home position shift amount upper 4 digits | 0 | 0 to 9999 | |

| Pr. | Name | Initial value | Setting range | Description |
|---|---|---|---|---|
| 1287<br>B185 | Travel distance after proximity dog ON lower 4 digits | 2048 | 0 to 9999 | Set the travel distance after detecting the proximity dog.<br>Travel distance after the proximity dog = Pr. 1288 × 10000 + Pr. 1287 |
| 1288<br>B186 | Travel distance after proximity dog ON upper 4 digits | 0 | 0 to 9999 | |
| 1289<br>B187 | Home position return stopper torque | 40% | 0 to 200% | Set the activation level of torque limit operation for the stopper-type home position return. |
| 1290<br>B188 | Home position return stopper waiting time | 0.5 s | 0 to 10 s | Set the waiting time until home position return is started after the inverter detects the pressing status. |
| 1292<br>B190 | Position control terminal input selection | 0 | 0 | Sudden stop signal (X87) of normally open input (NO contact input) |
| | | | 1 | Sudden stop signal (X87) of normally closed input (NC contact input) |
| 1293<br>B191 | Roll feeding mode selection | 0 | 0 | Roll feed disabled |
| | | | 1 | Roll feed enabled |

**Positioning by a point table (Pr. 4 to Pr. 6, Pr. 24 to Pr. 27, Pr. 232 to Pr. 239, Pr. 465 to Pr. 494, Pr. 1222 to Pr. 1281)**

- Create a the point table by setting the following parameters.

| Point table | Position data [command side] | | Maximum speed | Acceleration time | Deceleration time | Dwell time | Auxiliary function | Point table selection signal | | | |
|---|---|---|---|---|---|---|---|---|---|---|---|
| | Upper | Lower | | | | | | REX | RH | RM | RL |
| 1 | Pr. 466 | Pr. 465 | Pr. 4 | Pr. 1222 | Pr. 1223 | Pr. 1224 | Pr. 1225 | OFF | ON | OFF | OFF |
| 2 | Pr. 468 | Pr. 467 | Pr. 5 | Pr. 1226 | Pr. 1227 | Pr. 1228 | Pr. 1229 | OFF | OFF | ON | OFF |
| 3 | Pr. 470 | Pr. 469 | Pr. 6 | Pr. 1230 | Pr. 1231 | Pr. 1232 | Pr. 1233 | OFF | OFF | OFF | ON |
| 4 | Pr. 472 | Pr. 471 | Pr. 24 | Pr. 1234 | Pr. 1235 | Pr. 1236 | Pr. 1237 | OFF | OFF | ON | ON |
| 5 | Pr. 474 | Pr. 473 | Pr. 25 | Pr. 1238 | Pr. 1239 | Pr. 1240 | Pr. 1241 | OFF | ON | OFF | ON |
| 6 | Pr. 476 | Pr. 475 | Pr. 26 | Pr. 1242 | Pr. 1243 | Pr. 1244 | Pr. 1245 | OFF | ON | ON | OFF |
| 7 | Pr. 478 | Pr. 477 | Pr. 27 | Pr. 1246 | Pr. 1247 | Pr. 1248 | Pr. 1249 | OFF | ON | ON | ON |
| 8 | Pr. 480 | Pr. 479 | Pr. 232 | Pr. 1250 | Pr. 1251 | Pr. 1252 | Pr. 1253 | ON | OFF | OFF | OFF |
| 9 | Pr. 482 | Pr. 481 | Pr. 233 | Pr. 1254 | Pr. 1255 | Pr. 1256 | Pr. 1257 | ON | OFF | OFF | ON |
| 10 | Pr. 484 | Pr. 483 | Pr. 234 | Pr. 1258 | Pr. 1259 | Pr. 1260 | Pr. 1261 | ON | OFF | ON | OFF |
| 11 | Pr. 486 | Pr. 485 | Pr. 235 | Pr. 1262 | Pr. 1263 | Pr. 1264 | Pr. 1265 | ON | OFF | ON | ON |
| 12 | Pr. 488 | Pr. 487 | Pr. 236 | Pr. 1266 | Pr. 1267 | Pr. 1268 | Pr. 1269 | ON | ON | OFF | OFF |
| 13 | Pr. 490 | Pr. 489 | Pr. 237 | Pr. 1270 | Pr. 1271 | Pr. 1272 | Pr. 1273 | ON | ON | OFF | ON |
| 14 | Pr. 492 | Pr. 491 | Pr. 238 | Pr. 1274 | Pr. 1275 | Pr. 1276 | Pr. 1277 | ON | ON | ON | OFF |
| 15 | Pr. 494 | Pr. 493 | Pr. 239 | Pr. 1278 | Pr. 1279 | Pr. 1280 | Pr. 1281 | ON | ON | ON | ON |

***Tab. 5-55:*** *Creating a point table*

**Position data settings**

- Set the position feed length to Pr. 465 to Pr. 494.
- The feed length set to each point table is selected by multi-speed terminals (RH, RM, RL and REX).
- Under vector control with encoder, set the value calculated with the following formula as the position feed length: (encoder resolution × number of rotations × 4).
- For example, to stop the motor after 100 times of rotations using SF-V5RU, the value will be calculated with 2048 (pulse/r) × 100 (rotations per minute) × 4 (multiplier) = 819200 (feed length)

  To set 819200 as the first feed length, separate the number in to the upper and lower 4 digits as shown below:

- Pr. 466 (upper) = 81 (decimal), Pr. 465 (lower) = 9200 (decimal)
- The position feed length of PM sensorless vector control is fixed at 4096 for each motor rotation.

**Acceleration/deceleration time**

- Set the acceleration/deceleration time for parameters corresponding to each point table.
- The frequency that will be the basis of acceleration/deceleration time is Pr. 20 "Acceleration/deceleration reference frequency." However, 1 Hz/s is the minimum acceleration/deceleration rate (acceleration/deceleration frequency divided by acceleration/deceleration time). If the acceleration/deceleration rate is smaller than 1, the motor runs at 1 Hz/s or in the deceleration time.
- The maximum acceleration/deceleration time is limited at 360 s.
- During position control, acceleration/deceleration pattern is always the liner acceleration/deceleration, and the Pr. 29 "Acceleration/deceleration pattern selection" setting is ignored.

### Setting the waiting (dwell) time

- Set the waiting (dwell) time which is the interval from the completion of the position command of a selected point table to the start of the position command of the next point table.
- Set the dwell time from 0 to 20000 ms for parameters corresponding to each point table.

### Auxiliary function setting

- Set the handling and operation methods of the position data in each point table.
- Set the auxiliary function for parameters corresponding to each point table.

| Auxiliary function parameter setting | Sign (100 s digit) | Command method (10s digit) | Operation method (1 s digit) |
|---|---|---|---|
| 0 | Plus (0) | Absolute position command (0) | Individual (0) |
| 1 | | | Continuous (1) |
| 10 (initial value) | | Incremental position command (1) | Individual (0) |
| 11 | | | Continuous (1) |
| 100 | Minus (1) | Absolute position command (0) | Individual (0) |
| 101 | | | Continuous (1) |
| 110 | | Incremental position command (1) | Individual (0) |
| 111 | | | Continuous (1) |

***Tab. 5-56:*** *Auxiliary function*

- For the sign, select the sign of position data.
- For the command method, select the absolute position command or incremental position command. For the absolute position command, specify the distance from the home position. For the incremental position command, specify the distance from the current position command.
- Position commands cannot be received until the completion of the home position return.
- For the operation method, select individual or continuous. When continuous operation is selected, next point table is executed after a command has been executed. Set "individual" as the operation method for the point table that will be the last of the continuously operated point tables.
- Individual operation is only executed in the selected point table. The dwell time setting is disabled in individual operation.
- Continuous operation setting is not available for the point table 15 ("0, 10, 100 or 110" can be set to Pr. 1281).

**Positioning operation by point tables, example 1 (automatic continuous positioning operation)**

The figure below shows an operation example when the following settings are made for point tables.

| Point table | Target position | | Maximum speed (Hz) | Acceleration time (s) | Decelera-tion time (s) | Dwell time (ms) | Auxiliary function |
|---|---|---|---|---|---|---|---|
| | Upper | Lower | | | | | |
| 1 | 100 | 0 | 60 | 5 | 5 | 1000 | 1 (absolute position, continuous) |
| 2 | 50 | 0 | 30 | 6 | 6 | 0 | 10 (incremental position, individual) |

***Tab. 5-57:*** *Settings for point tables*

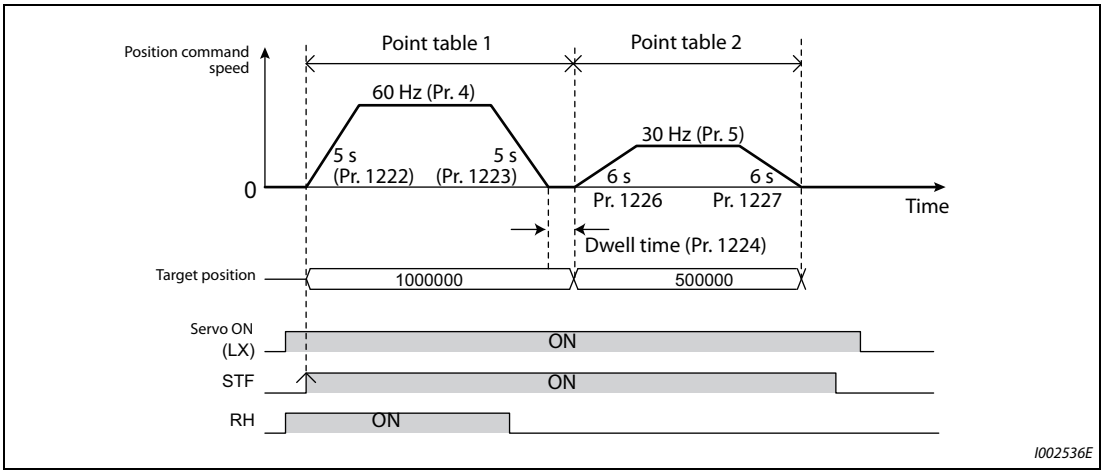


***Fig. 5-57:*** *Positioning operation by point tables*

**NOTES**

During continuous operation, the operation moves on to the next table after the position command speed becomes 0.

During continuous operation, no point table selection signal is received. Select the position feed length by point tables before turning ON the start command. Only the maximum frequency can be changed during operation. Position feed length cannot be switched.

**Positioning operation by point tables, example 2 (variable speed operation)**

- The maximum frequency can be changed during positioning operation. Use as many point tables as the number of maximum speeds to be set.
- The figure below shows an operation example when the following settings are made for point tables.

| Point table | Target position | | Maximum speed (Hz) | Acceleration time (s) | Decelera-tion time (s) | Dwell time (ms) | Auxiliary function |
|---|---|---|---|---|---|---|---|
| | Upper | Lower | | | | | |
| 1 | 5 | 0 | 30 | 1 | 1 | 0 | 1 (absolute position, continuous) |
| 2 | 3 | 0 | 20 | Invalid | Invalid | 0 | 11 (incremental position, individual) |
| 3 | 10 | 0 | 10 | Invalid | Invalid | 0 | 1 (absolute position, continuous) |
| 4 | 6 | 0 | 5 | Invalid | Invalid | 0 | 10 (incremental position, individual) |

***Tab. 5-58:*** *Settings for point tables*

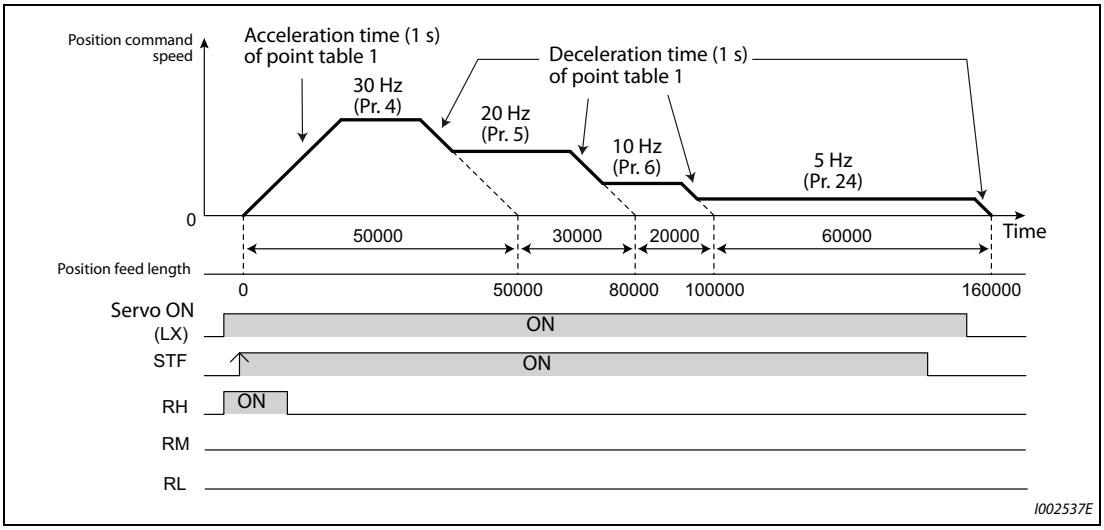


***Fig. 5-58:*** *Positioning operation by point tables*

- Set "0" as the dwell time to perform variable speed operation.

**Return to home position during point table positioning**

- Home position return is performed to match the command coordinates with the machine coordinates.
- The returned home position can be set as point 0, and positioning operation is available using this.
- Home position return procedure

① Set parameters related to home position return.

– Set the home position return method (Pr. 1282).

– Set the speed for home position return operation (Pr. 1283).

– Set the creep speed for home position return operation (Pr. 1284).

– Set the home position return shift amount if necessary (Pr. 1286 × 10000 + Pr. 1285).

– Set the post proximity dog travel distance if necessary (Pr. 1288 × 10000 + Pr. 1287).

② Turn OFF all point table selections.

– Turn OFF all RH, RM, RL and REX signals.

③ Turn ON the Pre-excitation/servo ON (LX) signal.

④ Turn ON the start signal (STF or STR).

– Home position return is performed according to the settings.

**NOTES**

The setting values of the point table 1 are used as acceleration/deceleration time.

After turning ON the start signal, only the setting values of Pr. 1283 "Home position return speed" or Pr. 1284 "Home position return creep speed" can be changed.

### Selecting the home position return method (Pr. 1282 to Pr. 1288)

| Pr. 1282 Setting | Home position return method | Description |
|---|---|---|
| 0 | Dog type ① Vector | Deceleration starts when the proximity dog signal is turned ON. For the home position after turn OFF of the proximity dog signal, the position specified by the first Z-phase signal or the position of the first Z-phase signal shifted by the home position shift amount (Pr. 1285, Pr. 1286) is used. 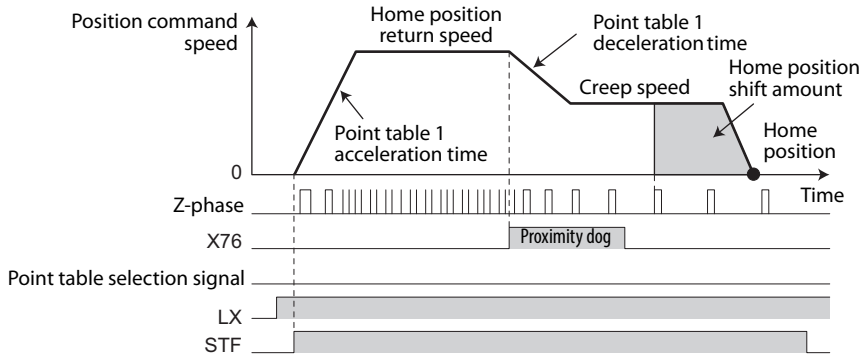  I002538E |
| 1 | Count type ① Vector | Deceleration starts when the proximity dog signal is turned ON. After the proximity dog, the motor travels the specified travel distance (Pr. 1287, Pr. 1288). Then, it uses the position specified by the the first Z-phase signal or position of the Z-phase signal shifted by the home position shift amount (Pr. 1285, Pr. 1286). 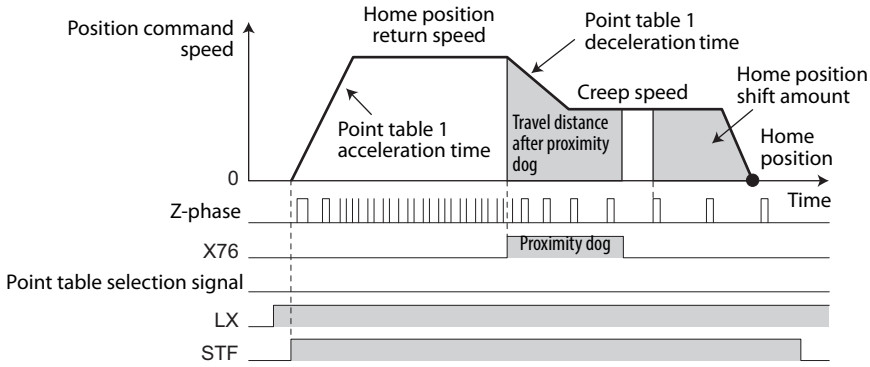  I002539E |
| 2 | Data set type Vector PM | The position at which the start signal is input is used as the home position. 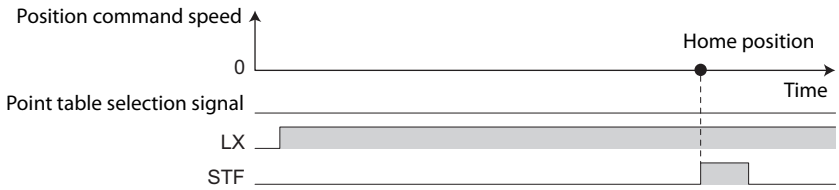  I002540E |

***Tab. 5-59:*** *Home position return methods (1)*

| Pr. 1282 Setting | Home position return method | Description |
|---|---|---|
| 3 | Stopper type<br>Vector<br>PM | A workpiece is pressed to a mechanical stopper, and the position where it is stopped is set as the home position.<br>Pressing is confirmed when the estimated speed value has fallen blow Pr. 865 "Low speed detection" for 0.5 s during activation of the torque limit operation. (While the stopper-type home position is performed, Pr. 1289 "Home position return stopper torque" is applied.) After Pr. 1290 "Home position return stopper waiting time" has passed after pressing is confirmed, the home position is shifted by the home position shift amount (Pr. 1285 and Pr. 1286). After a position command is created and the absolute value of the droop pulse (after electronic gear) falls below the in-position width, the home position return is completed.<br> 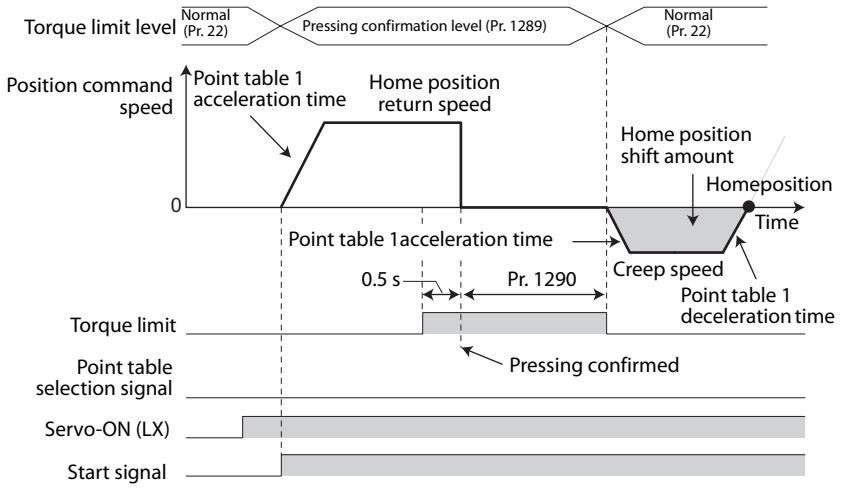 <br> |
| 4<br>(initial value) | Ignoring the home position<br>(Servo ON position is the home position)<br>Vector<br>PM | The serve ON position is used as the home position.<br> 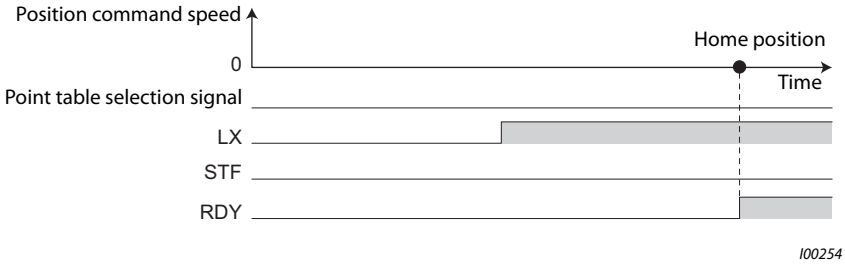 <br> |
| 5 | Dog type back end reference<br>Vector<br>PM | Deceleration starts at the front end of the proximity dog. After the back end is passed, the position is shifted by the post-dog travel distance and home position shift amount. The position after the shifts is set as the home position.<br>Set pulses required for deceleration from the creep speed or more as the total of the post-dog travel distance and home position shift amount.<br> 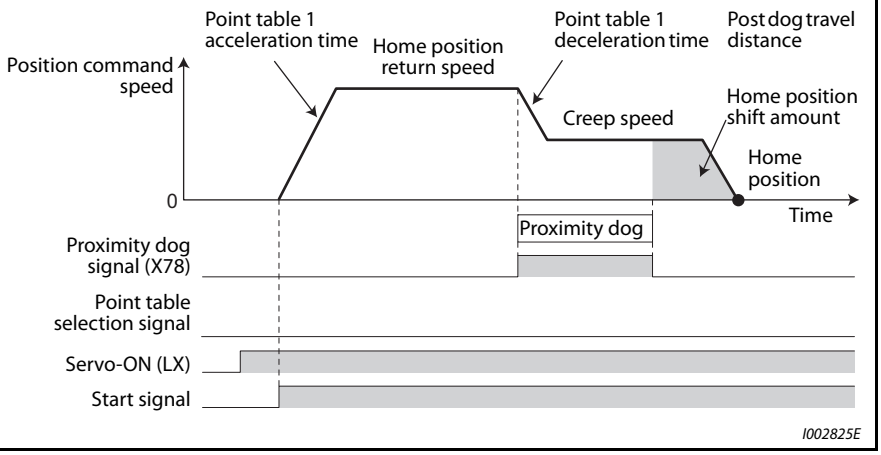 <br> |

***Tab. 5-59:*** *Home position return methods (2)*

| Pr. 1282 Setting | Home position return method | Description |
|---|---|---|
| 6 | Count type front end reference<br>Vector<br>PM | Deceleration starts at the front end of the proximity dog, and the position is shifted by the post-dog travel distance and home position shift distance. The position after the shifts is set as the home position.<br>Set pulses required for changing the speed from the home position speed to the creep speed or more as the total of the post-dog travel distance and home position shift amount.<br> 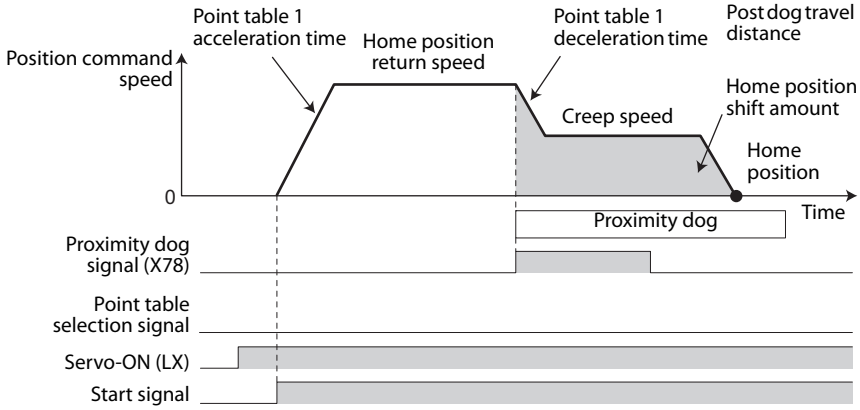 <br> |

***Tab. 5-59:*** *Home position return methods (3)*

① If it is set under PM sensorless vector control, Home position return parameter setting error (HP3) occurs.

**NOTE**

Home position return automatic back-off function

In a system that uses home position return with proximity dog, if the home position return is commanded while the motor is in a position within the proximity dog, the motor moves out of the proximity dog once, then starts deceleration to stop when it comes to the proximity dog again. The home position return is performed automatically after that.

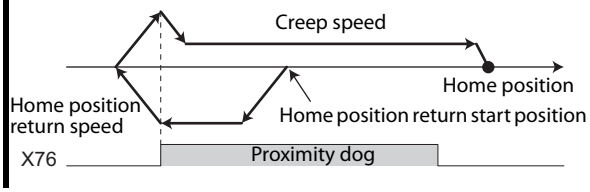

**Home position return error**

- If home position return is not normally completed, the following warnings appear on the operation panel.

| Operation panel indication | Name | Cause |
|---|---|---|
| HP1 | Home position return setting error | • The home position setting has failed. |
| HP2 | Home position return uncompleted | • Start signal for the point table positioning has turned ON without completing home position return.<br>• The proximity dog signal is turned OFF during transition from the home position return speed to the creep speed when home position return is performed in the dog type or dog type back end reference .<br>• The position command is given for the motor to reach the post-dog travel distance during transition from the home position return speed to the creep speed when home position return is performed in the count type .<br>• The position command is given for the motor to reach the total of the post-dog travel distance and home position shift distance during deceleration from the creep speed after the proximity dog signal is turned OFF in the dog type back end reference.<br>• The speed did not reach the creep speed in the count type with front end reference. |
| HP3 | Home position return parameter setting error | • An unavailable home position return method is selected. |

***Tab. 5-60:*** *Home position return warning*

- The Home position return failure (ZA) signal is output while the home position return warning is occurring. To use the ZA signal, set "56 (positive logic) or 156 (negative logic)" in any of Pr. 190 to Pr. 196 (Output terminal function selection) to assign the function.

**Sudden stop (Pr. 464, Pr. 1221 and X87 signal)**

- The operation performed during STF(STR)-OFF can be selected with Pr. 1221 "Start command edge detection selection".
- If STF(STR) is turned OFF during positioning or home position returning when Pr. 1221 = "0 (initial value)" is set, it stops in the time set as Pr. 464 "Digital position control sudden stop deceleration time".

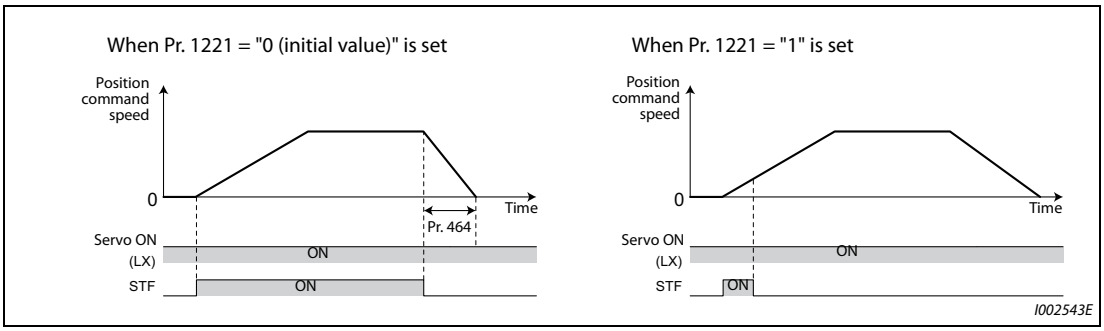


***Fig. 5-59:*** *Sudden stop*

- Turning ON the Sudden stop signal (X87) during positioning operation or home position return operation, the motor stops in the setting time of Pr. 464. For the X87 signal, set "87" in any of Pr. 178 to Pr. 189 (input terminal function selection) to assign the function to a terminal.

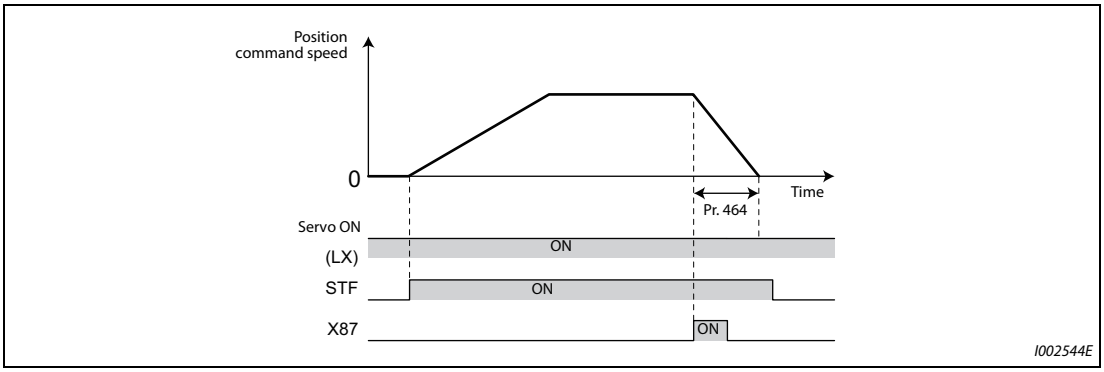


***Fig. 5-60:*** *Sudden stop during positioning operation or home position return operation*

- The input logic of the X87 signal can be set using Pr. 1292 "Position control terminal input selection".

| Pr. 1292 setting | Input logic (X87) |
|---|---|
| 0 (initial value) | Normally open input (NO contact input specification) |
| 1 | Normally closed input (NC contact input specification) |

***Tab. 5-61:*** *Input logic of sudden stop signal signal*

**NOTES**

When deceleration time longer than the normal deceleration time (including Pr. 1223) is set in Pr. 464, the normal deceleration time is applied to stop.

The X87 signal is effective during position control JOG operation.

### Roll feed mode (Pr. 1293)

- If the roll feed mode is enabled in an application that needs repeated positioning in the same direction, such as a conveyor, positioning can be performed repeatedly without position command overflow.
- When the roll feed mode is enabled (Pr. 1293="1"), the position where the first position command is created is set as the home position and the droop pulses are cleared.
  When Pr. 1293="1", simple positioning is available even if home position return cannot be completed.
- Positioning modes with which the roll feed mode can be enabled:
  - Point table mode
  - Home position return mode
  - JOG mode
- Basic operation example

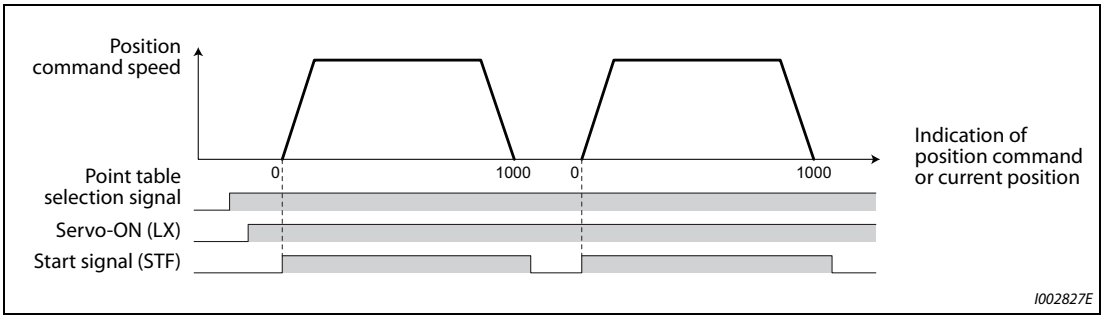


***Fig. 5-61:*** *Basic operation of roll feed mode*

### Input/output signals for point table positioning

| Input/ output | Signal name | | Function | Pr. 178 to Pr. 189 setting | Pr. 190 to Pr. 196 setting | |
|---|---|---|---|---|---|---|
| | | | | | Positive logic | Negative logic |
| Input | X76 | Proximity dog | ON: dog ON<br>OFF: dog OFF | 76 | — | |
| | X87 | Sudden stop | When turned ON, the motor decelerates and stops according to Pr. 464. | 87 | — | |
| Output | MEND | Travel completed | Turns ON when the position command operation has completed while the number of droop pulses is within the positioning completion width. | — | 38 | 138 |
| | ZA | Home position return failure | Turns ON while the home position return warning occurs. | — | 56 | 156 |
| | PBSY | During position command operation | Turns ON during position command operation. | — | 61 | 161 |
| | ZP | Home position return completed | Turns ON after home position return operation is complete. | — | 63 | 163 |

***Tab. 5-62:*** *Input/output signals for point table positioning*

● Output signal operation during positioning with point tables

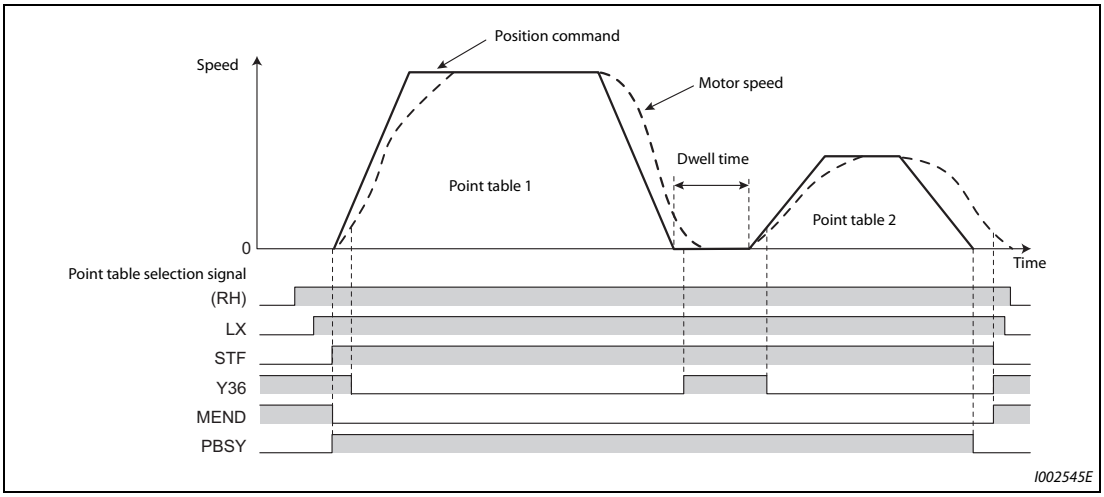


***Fig. 5-62:*** *Output signal operation during positioning with point tables*

● Output signal operation during positioning with home position return

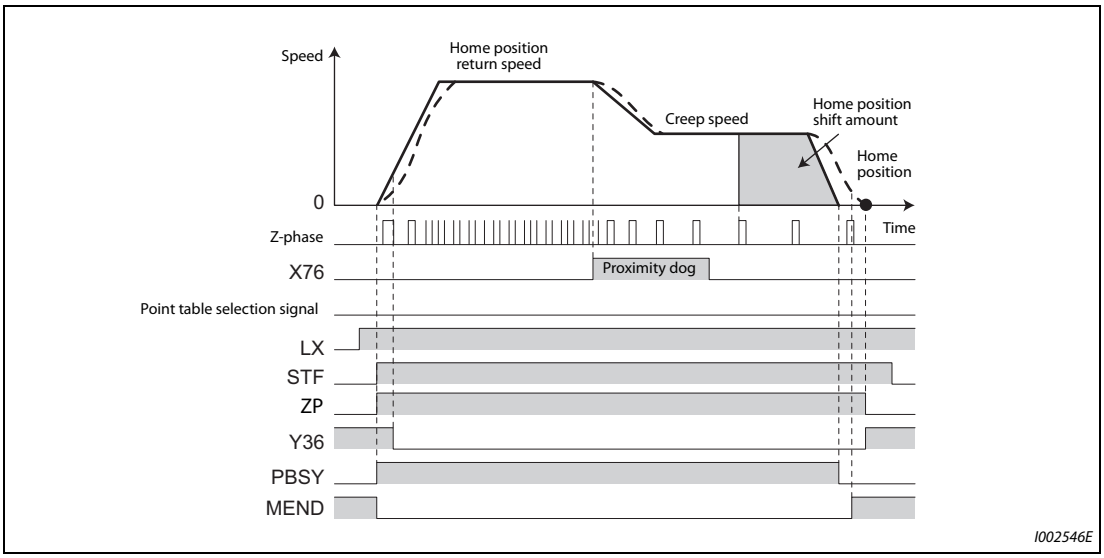


***Fig. 5-63:*** *Output signal operation during positioning with home position return*

| Parameters referred to | | | |
|---|---|---|---|
| Pr. 20 | Acceleration/deceleration reference frequency | => | page 5-225 |
| Pr. 29 | Acceleration/deceleration pattern selection | => | page 5-232 |

## 5.5.5 Position control by inverter pulse train input Vector PM

The simple position pulse train command can be input by pulse train input and sign signal (NP) to the JOG terminal.

| Pr. | Name | Initial value | Setting range | Description | |
|---|---|---|---|---|---|
| 419<br>B000 | Position command source selection | 0 | 0 | Simple position control by point tables (position command by setting parameters). | |
| | | | 2 | Simple pulse train command by inverter pulse input. | |
| 428<br>B009 | Command pulse selection | 0 | 0 to 2 | Pulse train + rotation direction sign | Negative logic |
| | | | 3 to 5 | | Positive logic |
| 429<br>B010 | Clear signal selection | 1 | 0 | The deviation counter is cleared at the edge when the clear (CLR) signal is switched from OFF to ON. | |
| | | | 1 | The deviation counter is cleared while the clear (CLR) signal is turned ON. | |
| 430<br>B011 | Pulse monitor selection | 9999 | 0 to 5, 100 to 105, 1000 to 1005, 1100 to 1105 | Shows the various pulse conditions during operation as the number of pulses. | |
| | | | 8888, 9999 | Shows the frequency monitor. | |

### Operation outline

If the Pre-excitation/servo ON (LX) signal is turned ON, output shutoff is canceled and the Position control preparation ready (RDY) signal is turned ON after 0.1 s. When STF (forward stroke end signal) or STR (reverse stroke end signal) is turned ON, the motor rotates according to the command pulse. When the forward (reverse) stroke end signal is turned OFF, the motor does not rotate in the corresponding direction.

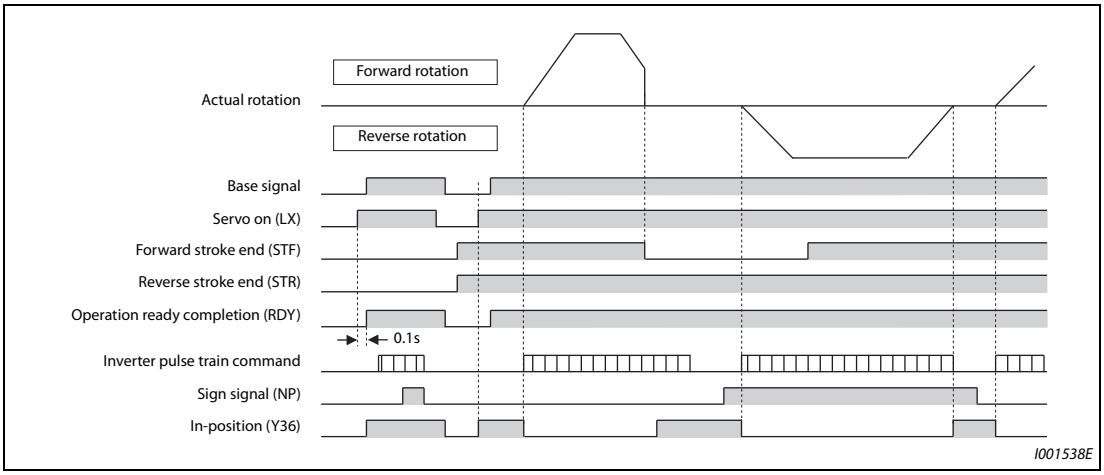


***Fig. 5-64:*** *Operation*

### Selecting the pulse train type (Pr. 428 and NP signal)

- Set Pr. 419 "Position command source selection" = "2" (simple pulse train position command).
- Set "68" in any of Pr. 178 to Pr. 189 (selection of the input terminal function) to assign Simple position pulse train sign (NP).
- Select the command pulse train with Pr. 428 "Command pulse selection".

| Pr. 428 setting | Command pulse train type | | During forward rotation | During reverse rotation |
|---|---|---|---|---|
| 0 to 2 | Negative logic | Pulse train + rotation direction sign | JOG<br>NP L H | |
| 3 to 5 | Positive logic | Pulse train + rotation direction sign | JOG<br>NP H L | |

***Tab. 5-63:*** *Setting of parameter 428*

- Select vector control or PM sensorless vector control to select the position control method.

**NOTE**

If Pr. 419 = "2" (simple pulse train position command) is set, the terminal JOG is used for the simple position pulse train input regardless of the Pr. 291 "Pulse train I/O selection" pulse train input/output selection setting.

### Clear signal selection (Pr. 429, CLR signal)

- This function is useful to reset the number of droop pulses to 0 when home position return is performed.
- If the simple position droop pulse clear (CLR) signal is turned ON when Pr. 429 "Clear signal selection" (clear signal selection) = "0", the deviation counter is cleared at the edge of the signal. The Simple position droop pulse clear CLR signal is also turned ON in synchronization with the zero pulse signal of the encoder such as the home position return signal, and the deviation counter is cleared.
- For a terminal used for the CLR signal, set "69" in any of Pr. 178 to Pr. 189 (input terminal function selection) to assign the function.

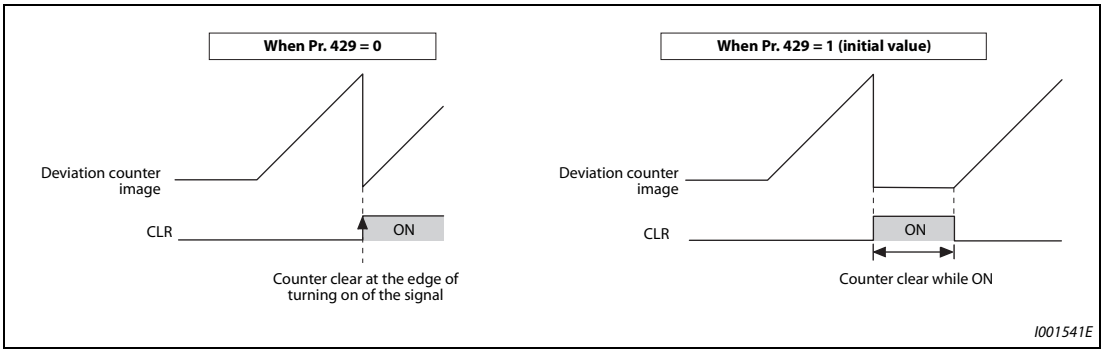


***Fig. 5-65:*** *Clear the droop pulse*

**Pulse monitor selection (Pr. 430)**

- Shows the various pulse conditions during operation as the number of pulses.Set "0" in Pr. 52 "Operation panel main monitor selection" to display the output frequency monitor.
- If any of "26 to 31" is set in Pr. 52, Pr. 774 to Pr. 776, and Pr. 992, the electronic gear operation setting for the pulse monitor by the multifunction monitor can be changed. (Refer to page 5-317.)

| Pr. 430 Setting | Description | |
|---|---|---|
| □□□0 | Pulse monitor selection | Displays the lower of the position command (accumulated value of command pulses). |
| □□□1 | | Displays the upper of the position command (accumulated value of command pulses). |
| □□□2 | | Displays the lower of the current position (accumulated value of feedback pulses ①). |
| □□□3 | | Displays the upper of the current position (accumulated value of feedback pulses ①). |
| □□□4 | | Displays the lower of the accumulated value of droop pulses. |
| □□□5 | | Displays the upper of the accumulated value of droop pulses. |
| □0□□ | For pulse monitor selection | Displays the monitor item selected in the pulse monitor selection after the electronic gear operation. |
| □1□□ | | Displays the monitor item selected in the pulse monitor selection before the electronic gear operation. |
| 0□□□ | For multifunction monitor | Displays the monitor item selected in the multifunction monitor (position command, current position, and droop pulse) before the electronic gear operation. |
| 1□□□ | | Displays the monitor item selected in the multifunction monitor (position command, current position, and droop pulse) after the electronic gear operation. |
| 8888 | For multifunction monitor | Displays the monitor item selected in the multifunction monitor (position command, current position, and droop pulse) after the electronic gear operation. |
| 9999 (initial value) | | Displays the monitor item selected in the multifunction monitor (position command, current position, and droop pulse) before the electronic gear operation. |

***Tab. 5-64:*** *Pulse monitor selection*

① Accumulated value of estimated feedback pulses when PM sensorless vector control is used

**The pulse monitor of the operation panel (FR-DU08)**

- The position command, current position and the status of droop pulses can be displayed on the operation panel.
- If displayed data has signs, minus signs appear for both upper and lower digits.
- If –99999999 or 99999999 is exceeded on the pulse monitor, the monitor value is reset to 0.

| Display data | | Monitor display without signs | Monitor display with signs |
|---|---|---|---|
| –10000 | Lower monitor | 0000 | -0000 |
| | Upper monitor | 1 | -- 1 |
| –100 | Lower monitor | 100 | -- 100 |
| | Upper monitor | 0 | -- 0 |

***Tab. 5-65:*** *Pulse monitor*

**NOTES**

The pulse count starts at servo on.

The accumulated number of pulses is cleared at base shutoff or when the CLR signal is turned ON.

Changing the terminal assignment using Pr. 178 to Pr. 189 (input terminal function selection) may affect the other functions. Set parameters after confirming the function of each terminal.

| Parameters referred to | | | |
|---|---|---|---|
| Pr. 52 | Operation panel main monitor selection | => | page 5-317 |
| Pr. 178 to Pr. 189 | (input terminal function selection) | => | page 5-409 |

## 5.5.6 Electronic gear setting Vector PM

Set the gear ratio between the machine gear and motor gear.

| Pr. | Name | Initial value | Setting range | Description |
|---|---|---|---|---|
| 420<br>B001 | Command pulse scaling factor numerator (electronic gear numerator) | 1 | 1 to 32767 | Set the electronic gear.<br>Pr. 420 is the numerator and Pr. 421 is the denominator. |
| 421<br>B002 | Command pulse multiplication denominator (electronic gear denominator) | 1 | 1 to 32767 | |
| 424<br>B005 | Position command acceleration/deceleration time constant | 0 s | 0 to 50 s | Use it when the rotation is not smooth because the electronic gear ratio is large (10 times or larger) and the rotation speed is slow. |

**Gear ratio calculation (Pr. 420, Pr. 421)**

The position resolution (travel distance per pulse Δl [mm]) is the travel distance per motor rotation Δs [mm] and the feedback pulse of the detector.

It is determined by Pf [pulse/rev] and represented with the following formula.

$$\Delta l = \frac{\Delta s}{Pf}$$

Δl: Travel distance per pulse [mm]
Δs: Travel distance in one motor rotation [mm]
Pf: Number of feedback pulses [pulse/rev] (the number of pulses after the number encoder pulses is quadruplicated)

The travel distance in 1 command pulse can be separately specified with a parameter and so an integer can be set as the travel distance in 1 command pulse.

$$\Delta l = \frac{\Delta s}{Pf} \times \frac{Pr.\ 420}{Pr.\ 421}$$

The following formula shows the relationship between the motor speed and internal command pulse frequency.

$$fo \times \frac{Pr.\ 420}{Pr.\ 421} = Pf \times \frac{No}{60}$$

fo: Internal command pulse frequency [pps]
No: Motor rotation speed [r/min]

**NOTE**

Set the electronic gear ratio in the range of 1/50 to 20. Note that, if the setting value is too small, the speed command will also be too small; while if it is too large, the speed ripple will be too large.

**Example ▽** Setting example 1:

In a driving system whose ball screw pitch is PB =10 (mm) and the reduction ratio is 1/n =1, the electronic gear ratio is Δs =10 (mm) when Δl = 0.01 (mm) and Pf = 4000 (pulses/rev) is set as the number of feedback pulses. Based on this, use the following formula:

$$\Delta l = \frac{\Delta s}{Pf} \times \frac{Pr.\ 420}{Pr.\ 421}$$

$$\frac{Pr.\ 420}{Pr.\ 421} = \Delta l \times \frac{Pf}{\Delta s}$$

$$= 0.01 \times \frac{4000}{10} = \frac{4}{1}$$

Thus, set the parameters as follows: Pr. 420 = "4", Pr. 421 = "1".

△

**Example ▽** Setting example 2:

Find the internal command pulse frequency for the rated motor speed of the dedicated motor. However, the command pulse ratio is Pr. 420/Pr. 421 = "1".
If the number of encoder pulses is 2048 (pulses/rev), (feedback pulse pf = 2048 × 4)

$$fo = 2048 \times 4\ (\text{multiplication}) \times \frac{No.}{60} \times \frac{Pr.\ 421}{Pr.\ 420}$$

$$= 204800$$

The internal command pulse will be 204800 (pps) in accordance with the above formula.

△

Relationship between the position resolution Δl and system accuracy

The system accuracy (the positioning accuracy of the machine) is the sum of electric deviation and mechanical deviation. Normally try to prevent the total deviation from being affected by the electronic deviation. Refer to the following relationship as a reference.

$$\Delta l < \left(\frac{1}{5} \text{ to } \frac{1}{10}\right) \times \Delta\varepsilon \qquad \Delta\varepsilon\text{: positioning accuracy}$$

<Motor stop characteristics>

When running the motor by parameter settings, the relationship between the internal command pulse frequency and the number of motor rotations will be as shown in Figure page 5-147. Pluses as much as the motor speed delay are accumulated in the deviation counter. These pulses are called droop pulses (ε). The relationship between the command frequency (fo) and position control gain (Kp: Pr. 422) is shown in the following formula.

$$\varepsilon = \frac{fo}{Kp}\ [\text{pulse}] \qquad \varepsilon = \frac{204800}{25}\ [\text{pulse}]\ (\text{with the rated motor speed})$$

The number of droop pulses (ε) will be 8192 with the initial value Kp = 25 $s^{-1}$.

Since the inverter has droop pulses during operation, a stop settling time (ts), which is the time between the zero command output and the motor stop, is required. Set the operation pattern taking into the account the stop setting time.

$$ts = 3 \times \frac{1}{Kp}\ [s]$$

The stop settling time (ts) will be 0.12 s for the initial value Kp = 25 $s^{-1}$.

The accuracy of positioning Δε will be (5 to 10) × Δl =Δε [mm]

**Position command constant value during acceleration/deceleration (Pr. 424)**

- If the electronic gear ratio is large (1:10 or larger) and the rotation speed is slow, the rotation is not smooth and the rotation shape becomes like a pulse. Set this option in such a case to smoothen the rotation.
- If the command pulse frequency varies rapidly when no acceleration time can be assigned to the command pulse, overshoot or excessive error alarms may occur. Set this option in such a case to set the acceleration/deceleration time.
  Normally it is set to 0.

| Parameters referred to | | | |
|---|---|---|---|
| Pr. 422 | Position control gain | => | page 5-175 |

## 5.5.7 Position adjustment parameter settings Vector PM

| Pr. | Name | Initial value | Setting range | Description |
|---|---|---|---|---|
| 426<br>B007 | In-position width | 100 pulses | 0 to 32767 pulses | Set the number of droop pulses that triggers the In-position (Y36) signal. |
| 427<br>B008 | Excessive level error | 40 x $10^3$ | 0 to 400 x $10^3$ | Set the number droop pulses that activates Excessive position fault (E.OD). |
| | | | 9999 | Function invalid |
| 1294<br>B192 | Position detection lower 4 digits | 0 | 0 to 9999 | Set the lower four digits of the position detection value. |
| 1295<br>B193 | Position detection upper 4 digits | 0 | 0 to 9999 | Set the upper four digits of the position detection value. |
| 1295<br>B193 | Position detection selection | 0 | 0 | The position is detected on both the plus side and minus sides. |
| | | | 1 | The position is detected on the plus side only. |
| | | | 2 | The position is detected on the minus side only. |
| 1297<br>B195 | Position detection hysteresis width | 0 | 0 to 32767 | Set the hysteresis width for the detection position of the position detected signal (FP signal). |

**In-position width (Pr. 426, Y36 signal)**

- The Y36 signal is used as the in-position signal.
- If the number of droop pulses is equal to or smaller than the Pr. 426 setting value, the In-position (Y36) signal is turned ON.
- To use the Y36 signal, set "36 (positive logic) or 136 (negative logic)" in any of Pr. 190 to Pr. 196 (output terminal function selection) to assign the function.

**Excessive error level (Pr. 427)**

- If the number of droop pulses exceeds the Pr. 427 setting, a position error is detected, Excessive position fault (E.OD) is activated and the inverter output is shut off. Increase the error threshold level when a small value is set as the Position control gain setting value. Set a small value for early detection even when the load is heavy.
- If Pr. 427 = "9999" is set, E.OD is not activated regardless of the amount of droop pulses.

**Position detected signal (Pr. 1294 to Pr. 1297, FP signal)**

- The position detected signal (FP signal) is turned ON when the current position [before the electronic gear] exceeds the position detection (Pr. 1295 × 10000 + Pr. 1294). To use the FP signal, set "60 (positive logic) or 160 (negative logic)" in any of Pr. 190 to Pr. 196 (output terminal function selection) to assign the function.
- Whether the position detection is determined on the plus side or minus side can be selected by Pr. 1296 "Position detection selection". When "0" is set, the position is detected on both the plus and minus sides. When "1" is set, the position is detected on the plus side only. When "2" is set, the position is detected on the minus side only.

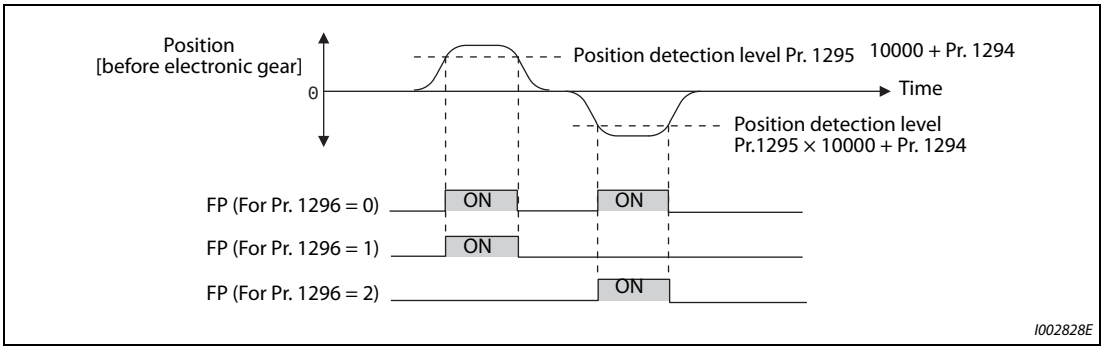


***Fig. 5-66:*** *Function of FP signal*

- When a current position varies, the position detected signal may repeat ON/OFF (chatter). Setting hysteresis to the detected position prevents chattering of the signal. Use Pr. 1297 "Position detection hysteresis width" to set a hysteresis width.

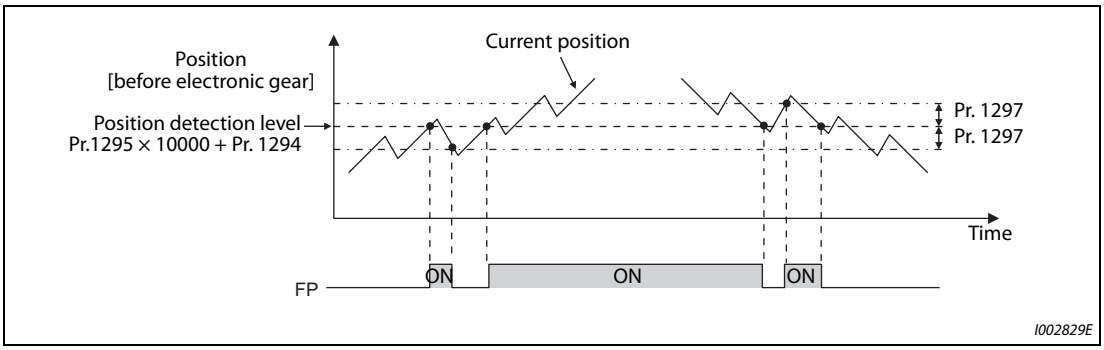


***Fig. 5-67:*** *FP signal at current position variation*

## 5.5.8 Position control gain adjustment Vector PM

Easy gain tuning is provided as an easy tuning method. For details about easy gain tuning, refer to page 5-66.

If it does not produce any effect, make fine adjustment by using the following parameters.

Set "0" to Pr. 819 "Easy gain tuning selection" before setting the following parameters.

| Pr. | Name | Initial value | Setting range | Description |
|---|---|---|---|---|
| 422<br>B003 | Position control gain | 25 $s^{-1}$ | 0 to 150 $s^{-1}$ | Set the gain for the position loop. |
| 423<br>B004 | Position feed forward gain | 0% | 0 to 100% | Function to cancel a delay caused by the droop pulses in the deviation counter. |
| 425<br>B006 | Position feed forward command filter | 0 s | 0 to 5 s | Input the first delay filter for the feed forward command. |
| 446<br>B012 | Model position control gain | 25 $s^{-1}$ | 0 to 150 $s^{-1}$ | Set the gain for the model position controller. |
| 828<br>G224 | Model speed control gain | 60% | 0 to 1000% | Set the gain for the model speed controller. |
| 877<br>G220 | Speed feed forward control/model adaptive speed control selection | 0 | 0, 1 | Perform position feed forward control. |
| | | | 2 | Model adaptive position control becomes valid. |
| 880<br>C114 | Load inertia ratio | 7-fold | 0 to 200-fold | Set the load inertia ratio for the motor. |

**Position control gain (Pr. 422)**

- Make adjustment when any of such a phenomena as unusual vibration, noise and overcurrent of the motor/machine occurs.
- Increasing the setting improves traceability for the position command and also improves servo rigidity at a stop, but oppositely makes an overshoot and vibration more liable to occur.
- Normally set this parameter within the range about 5 to 50.

| Movement • condition | How to adjust Pr. 422 |
|---|---|
| Response is slow. | Increase the setting value.<br>Increase the setting value by 3 $s^{-1}$ until immediately before an overshoot, stop-time vibration or other instable phenomenon occurs, and set about 80 to 90% of that value. |
| Overshoot, stop-time vibration or other instable phenomenon occurs. | Lower the setting value.<br>Lower the setting value by 3 $s^{-1}$ until immediately before an overshoot, stop-time vibration or other instable phenomenon does not occur, and set about 80 to 90% of that value. |

***Tab. 5-66:*** *Setting of parameter 422*

**Position feed forward gain (Pr. 423)**

- This function is designed to cancel a delay caused by the droop pulses in the deviation counter. Set this parameter when a sufficient position response cannot be obtained after setting Pr. 422.
- When a tracking delay for command pulses poses a problem, increase the setting gradually and use this parameter within the range where an overshoot or vibration will not occur.
- This function has no effects on servo rigidity at a stop.
- Normally set this parameter to 0.
- When setting Pr. 423, set Pr. 877 = "0 or 1" to enable position feed forward control.

**Model adaptive position control (Pr. 446)**

- Set each response for position commands and for load and external disturbances individually.
- Set this parameter when a sufficient position response cannot be obtained after setting Pr. 422.
- When setting Pr. 446, set Pr. 877 = "2" to enable the model adaptive position control, Pr. 828 "Model speed control gain" ≠ "0", and a load inertia ratio in Pr. 880 "Load inertia ratio".
- Set a small value in Pr. 446 first, and then increase the setting gradually and use this parameter within the range where an overshoot or vibration will not occur.

## 5.5.9 Troubleshooting in position control Vector PM

| | Condition | Cause | Countermeasure |
|---|---|---|---|
| 1 | The motor does not rotate. | There is incorrect phase sequence between the motor wiring and encoder wiring. | Check the wiring. (Refer to page 2-67.) |
| | | Control mode selection setting Pr. 800 "Control method selection" is not appropriate. | Check the Pr. 800 setting. (Refer to page 5-55.) |
| | | No servo ON or stroke end signals (STF/STR) are input. | Check if a signal is properly input. |
| | | A command pulse or position pulse sign (NP) is not correctly input. | • Check if the command pulse is properly input. (check the accumulated value for command pulses in Pr. 430 "Pulse monitor selection").<br>• Check the command pulse type in Pr. 428 "Command pulse selection".<br>• Check that the position pulse sign (NP) is assigned to an input terminal. (inverter pulse input) |
| | | The setting in Pr. 419 "Position command source selection" (position command source selection) is not correct. | Check the position command source selection in Pr. 419. |
| | | When simple position control by a point table (Pr. 419 = "0") is used, the position feed length set by Pr. 465 to Pr. 494 is not correct. | Check the position feed length in Pr. 465 to Pr. 494. |
| 2 | The position is unfavorably shifted. | A command pulse is not correctly input. | • Check the command pulse type in Pr. 428 "Command pulse selection".<br>• Check if the command pulse is properly input. (check the accumulated value of command pulses in Pr. 430)<br>• Check that the position pulse sign (NP) is assigned to an input terminal. (inverter pulse input) |
| | | The command is affected by noise. Noise is superpositioned on the encoder feedback signals. | • Set Pr. 72 "PWM frequency selection" lower.<br>• Change the earthing (grounding) position of the shielded cable. Alternatively, do not connect it. |
| 3 | Hunting occurs in the motor or the machine. | Position loop gain is too high. | Set Pr. 422 "Position control gain" lower. |
| | | Speed loop gain is too high. | • Perform easy gain tuning.<br>• Set Pr. 820 "Speed control P gain 1" lower and Pr. 821 "Speed control integral time 1" higher. |
| 4 | Machine movement is unstable. | Acceleration/deceleration time settings are affecting adversely. | Set Pr. 7 "Acceleration time" and Pr. 8 "Deceleration time" lower. |

***Tab. 5-67:*** *Troubleshooting*

**Flowcharts**

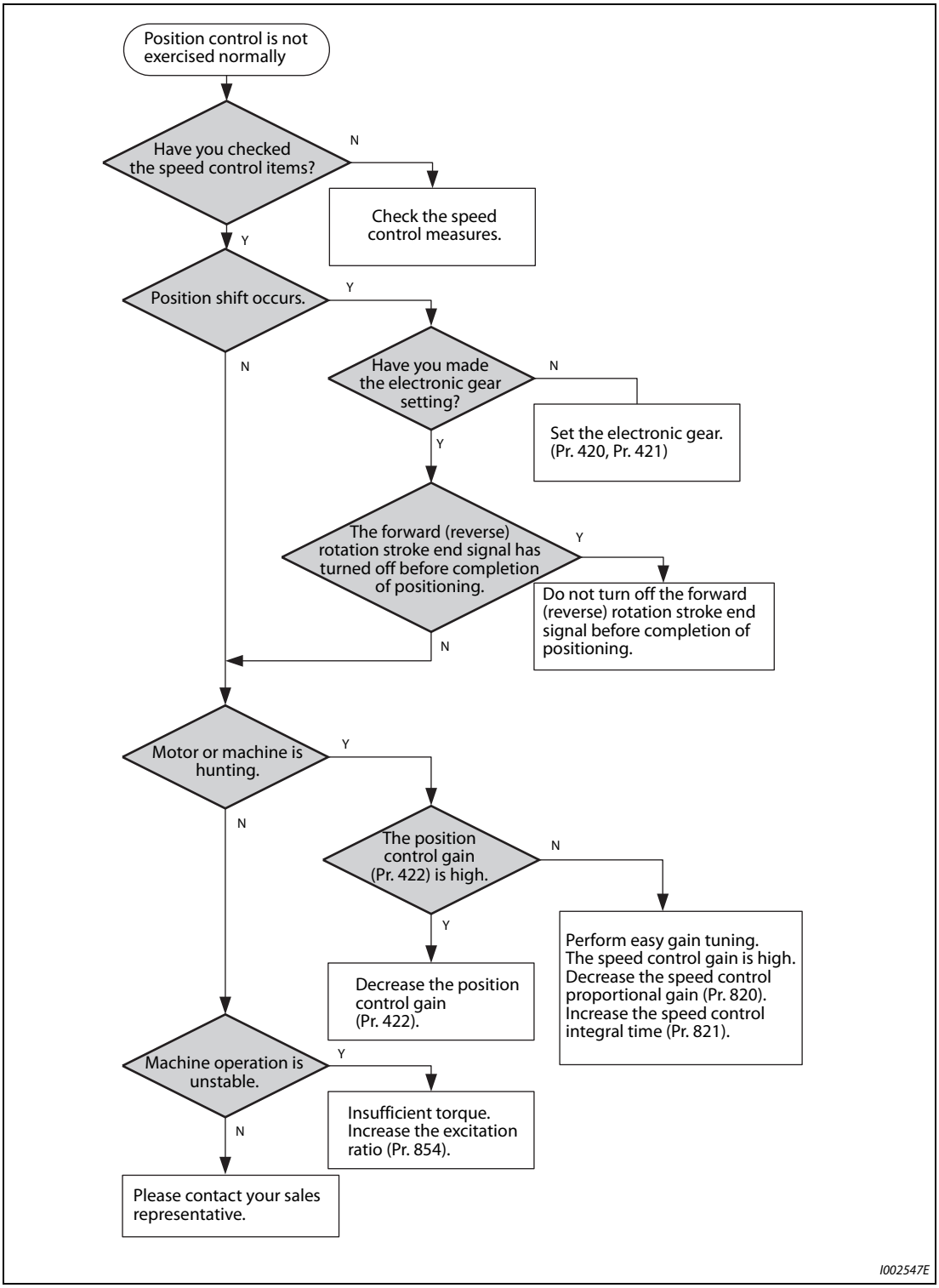


***Fig. 5-68:*** *Troubleshooting for when position control is not exercised normally*

**NOTE** The speed command of position control is related to speed control. (Refer to page 5-75.)

| Parameters referred to | | | |
|---|---|---|---|
| Pr. 7 | Acceleration time | => | page 5-225 |
| Pr. 8 | Deceleration time | => | page 5-225 |
| Pr. 72 | PWM frequency selection | => | page 5-211 |
| Pr. 800 | Control method selection | => | page 5-55 |
| Pr. 802 | Pre-excitation selection | => | page 5-640 |
| Pr. 819 | Easy gain tuning selection | => | page 5-66 |
| Pr. 820 | Speed control P gain 1 | => | page 5-66 |
| Pr. 821 | Speed control integral time 1 | => | page 5-66 |

# 5.6 Real sensorless vector control, vector control, PM sensorless vector control adjustment

| Purpose | Parameter to set | | | Refer to page |
|---|---|---|---|---|
| To stabilize speed and torque feedback signal. | Speed detection filter<br>Torque detection filter | P.G215, P.G216, P.G315, P.G316 | Pr. 823, Pr. 827, Pr. 833, Pr. 837 | 5-180 |
| To changes excitation ratio | Excitation ratio | P.G217 | Pr. 854 | 5-181 |

## 5.6.1 Speed detection filter and torque detection filter Sensorless Vector PM

Set the time constant of primary delay filter for speed feedback signal and torque feedback signal.

Speed loop response is reduced. Under ordinary circumstances, therefore, use the initial value as it is.

| Pr. | Name | Initial value | Setting range | Description |
|---|---|---|---|---|
| 823<br>G215 ① | Speed detection filter 1 | 0.001 s | 0 | Without filter |
| | | | 0.001 to 0.1 s | Set the time constant of primary delay filter for speed feedback signal. |
| 827<br>G216 | Torque detection filter 1 | 0 s | 0 | Without filter |
| | | | 0.001 to 0.1 s | Set the time constant of primary delay filter torque feedback signal. |
| 833<br>G315 ① | Speed detection filter 2 | 9999 | 0 to 0.1 s | Second function of Pr. 823 (enabled when RT signal ON) |
| | | | 9999 | Same as Pr. 823 setting |
| 837<br>G316 | Torque detection filter 2 | 9999 | 0 to 0.1 s | Second function of Pr. 827 (enabled when RT signal ON) |
| | | | 9999 | Same as Pr. 827 setting |

① These parameters are available when FR-A8AP (option) is installed.

### Stabilizing speed detection (Pr. 823, Pr. 833)

- Speed loop response is reduced. Under ordinary circumstances, therefore, use the initial value as it is.
  If there is speed ripple due to high frequency disturbance, adjust until speed stabilizes by gradually raising the setting. Speed is oppositely destabilized if the setting value is too large.
- This setting is valid under vector control only.

### Stabilizing torque detection (Pr. 827, Pr. 837)

- Current loop response is reduced. Under ordinary circumstances, therefore, use the initial value as it is.
  If there is torque ripple due to high frequency disturbance, adjust until speed stabilizes by gradually raising the setting. Speed is oppositely destabilized if the setting value is too large.

### Employing multiple primary delay filters

- Use Pr. 833, Pr. 837 if changing filter according to application. Pr. 833, Pr. 837: Second function selection (RT) signal

**NOTES**

The RT signal is a second function selection signal. The RT signal also enables other second functions. (Refer to page 5-415.)

The RT signal is assigned to the terminal RT in the initial setting. Set "3" in any of Pr. 178 to Pr. 189 (input terminal function selection) to assign the RT signal to another terminal.

## 5.6.2 Excitation ratio Sensorless Vector

The excitation ratio can be lowered to enhance efficiency for light loads. (Motor magnetic noise can be reduced.)

| Pr. | Name | Initial value | Setting range | Description |
|---|---|---|---|---|
| 854<br>G217 | Excitation ratio | 100% | 0 to 100% | Set an excitation ratio when there is no load. |

- When excitation ratio is reduced, output torque startup is less responsive.
  This function is suitable for applications such as machine tools that suddenly accelerate/decelerate repeatedly up to high speed.

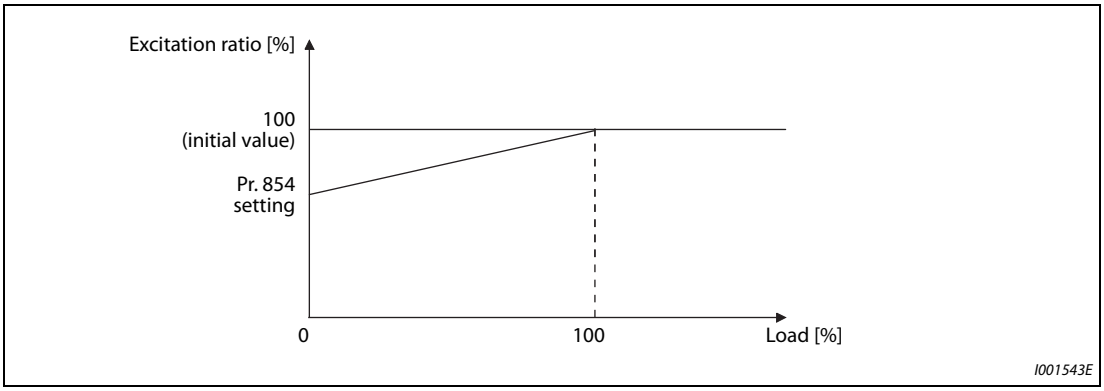


***Fig. 5-69:*** *Setting of the excitation ratio*

**NOTE** The setting of Pr. 854 is invalid if Pr. 858 "Terminal 4 function assignment" or Pr. 868 "Terminal 1 function assignment" is set to "1" (flux command according to terminal).

# 5.7 (E) Environment setting parameters

| Purpose | Parameter to set | | | Refer to page |
|---|---|---|---|---|
| To set the time | Simple clock function | P.E030 to P.E032 | Pr. 1006 to Pr. 1008 | 5-183 |
| To set a limit for the reset function.<br>To shut off output if the operation panel disconnects.<br>To force deceleration to a stop on the operation panel. | Reset selection/ disconnected PU detection/PU stop selection/Reset limit | P.E100 to P.E102, P.E107 | Pr. 75 | 5-184 |
| To select the display language of the parameter unit | PU display language selection | P.E103 | Pr. 145 | 5-188 |
| To control the buzzer of the parameter unit and operation panel | PU buzzer control | P.E104 | Pr. 990 | 5-188 |
| To adjust the LCD contrast of the parameter unit | PU contrast adjustment | P.E105 | Pr. 991 | 5-188 |
| To turn OFF the operation panel when not using it for a certain period of time | Display-off mode | P.E106 | Pr.1048 | 5-189 |
| To use the USB memory | USB host reset | P.E110 | Pr. 1049 | 5-189 |
| To use the setting dial of the operation panel like a potentiometer to set the frequency.<br>To disable the operation panel. | Operation panel operation selection | P.E200 | Pr. 161 | 5-190 |
| To change the frequency change increments which changes when using the setting dial of the operation panel | Frequency change increment amount setting | P.E201 | Pr. 295 | 5-192 |
| To use the regeneration unit to increase the motor braking torque | Regenerative brake selection | P.E300, P.G107 | Pr. 30, Pr. 70 | 5-652 |
| To change the overload current rating specification | Multiple rating setting | P.E301 | Pr. 570 | 5-193 |
| To input a voltage between 480 V and 500 V | Input voltage mode selection | P.E302 | Pr. 977 | 5-195 |
| To prevent parameter rewriting | Parameter write disable selection | P.E400 | Pr. 77 | 5-195 |
| To restrict parameters with a password | Password function | P.E410, P.E411 | Pr. 296, Pr. 297 | 5-199 |
| To use parameters freely | Free parameter | P.E420, P.E421 | Pr. 888, Pr. 889 | 5-203 |
| To change parameter settings for an IPM motor as a batch | IPM parameter initialization | P.E430 | Pr. 998 | 5-70 |
| To set multiple parameters as a batch | Automatic parameter setting | P.E431 | Pr. 999 | 5-203 |
| To display the required parameters | Applicable parameter display and user group function | P.E440 to P.E443 | Pr. 160,<br>Pr. 172 to Pr. 174 | 5-208 |
| To release the parameter copy warning (CP) | Parameter copy alarm release | P.E490 | Pr. 989 | 5-678 |
| To reduce the motor noise and EMI | PWM carrier frequency changing | P.E600 to P.E602 | Pr. 72, Pr. 240,<br>Pr. 260 | 5-211 |
| To understand the maintenance time of inverter parts and peripheral device | Inverter parts life display | P.E700 to P.E704 | Pr. 255 to Pr. 259 | 5-214 |
| | Maintenance output function | P.E710 to P.E715 | Pr. 503, Pr. 504,<br>Pr. 686 to Pr. 689 | 5-219 |
| | Current average value monitor signal | P.E720 to P.E722 | Pr. 555 to Pr. 557 | 5-221 |

## 5.7.1 Simple clock function

The time can be set. The time can only be updated while the inverter power is ON.

| Pr. | Name | Initial value | Setting range | Description |
|---|---|---|---|---|
| 1006<br>E030 | Clock (year) | 2000 | 2000 to 2099 | Set the year. |
| 1007<br>E031 | Clock (month, day) | 101<br>(January 1) | 101 to 131, 201 to 228, (229), 301 to 331, 401 to 430, 501 to 531, 601 to 630, 701 to 731, 801 to 831, 901 to 930, 1001 to 1031, 1101 to 1130, 1201 to 1231 | Set the month and day.<br>1000 and 100 digits: January to December<br>10 and 1 digits: 1 to end of month (28, 29, 30 or 31)<br>For December 31, set "1231". |
| 1008<br>E032 | Clock (hour, minute) | 0<br>(00:00) | 0 to 59, 100 to 159, 200 to 259, 300 to 359, 400 to 459, 500 to 559, 600 to 659, 700 to 759, 800 to 859, 900 to 959, 1000 to 1059, 1100 to 1159, 1200 to 1259, 1300 to 1359, 1400 to 1459, 1500 to 1559, 1600 to 1659, 1700 to 1759, 1800 to 1859, 1900 to 1959, 2000 to 2059, 2100 to 2159, 2200 to 2259, 2300 to 2359 | Set the hour and minute using the 24-hour clock.<br>1000 and 100 digits: 0 to 23 hours<br>10 and 1 digits: 0 to 59 minutes<br>For 23:59, set "2359". |

When the year, month, day, time and minute are set in the parameters, the inverter counts the date and time. The date and time can be checked by reading the parameters.

**NOTES**

The clock's count-up data is saved in the inverter's EEPROM every 10 minutes.

Because the date and time are cleared after turning OFF the control circuit power supply, the clock function must be reset after turning ON the power supply. Use a separate power supply, such as an external 24 V power supply, for the control circuit of the simple clock function, and supply power continuously to this control circuit.

In the initial setting, inverter reset is performed if supplying power to the main circuit is started when power is supplied only to the control circuit. Then, the clock information stored in EEPROM is restored. Reset at the start of supplying power to the main circuit can be disabled by setting Pr. 30 "Regenerative function selection". (Refer to page 5-652.)

The set clock is also used for functions such as faults history.

## 5.7.2 Reset selection/disconnected PU detection/PU stop selection

The reset input acceptance, disconnected PU (FR-DU08/FR-PU07) connector detection function and PU stop function can be selected.

| Pr. | Name | Initial value | Setting range | Description |
|---|---|---|---|---|
| 75 | Reset selection/disconnected PU detection/PU stop selection | 14 | 0 to 3, 14 to 17 ① | For the initial setting, reset is always enabled, without disconnected PU detection, and with the PU stop function. |
| | | | 0 to 3, 14 to 17, 100 to 103, 114 to 117 ② | |
| E100 | Reset selection | 0 | 0 | Reset input is always enabled. |
| | | | 1 | Reset input is enabled only when the protective function is activated. |
| E101 | Disconnected PU detection | 0 | 0 | Operation continues even when the PU is disconnected. |
| | | | 1 | The inverter output is shut off when the PU is disconnected. |
| E102 | PU stop selection | 1 | 0 | Decelerates to a stop when the STOP key is pressed in PU operation mode only. |
| | | | 1 | Decelerates to a stop when the STOP key for PU is pressed in any of the PU, external and communication operation modes. |
| E107 | Reset limit | 0 | 0 | Reset limit disabled |
| | | | 1 ② | Reset limit enabled |

The parameters above will not return to their initial values even if parameter (all) clear is executed.

① The setting range for the FR-A820-03160(55K) or lower and FR-A840-01800(55K) or lower.

② The setting range for the FR-A820-03800(75K) or higher and FR-A840-02160(75K) or higher.

| Pr. 75 Setting ① | Reset selection | Disconnected PU detection | PU stop selection |
|---|---|---|---|
| 0, 100 | Reset input always enabled | Operation continues even when PU is disconnected. | Decelerates to a stop when STOP/RESET is input in PU operation mode only. |
| 1, 101 | Reset input enabled only when protective function activated | | |
| 2, 102 | Reset input always enabled | Inverter output shut off when PU disconnected. | |
| 3, 103 | Reset input enabled only when protective function activated | | |
| 14 (Initial value), 114 | Reset input always enabled | Operation continues even when PU is disconnected. | Decelerates to a stop when STOP/RESET is input in any of the PU, external and communication operation modes. |
| 15, 115 | Reset input enabled only when protective function activated | | |
| 16, 116 | Reset input always enabled | Inverter output shut off when PU disconnected. | |
| 17, 117 | Reset input enabled only when protective function activated | | |

***Tab. 5-68:*** *Setting of parameter 75*

① Setting Pr. 75 = any of "100 to 103 and 114 to 117" will enable the reset limit function. The setting is available for the FR-A820-03800(75K) or higher and FR-A840-02160(75K) or higher.

**Reset selection (P.E100)**

When P.E100 ="1" or Pr. 75 ="1, 3, 15, 17, 100, 103, 115, or 117" is set, reset (reset command via RES signal or communication) input is enabled only when the protective function is activated.

**NOTES**

When the reset signal (RES) is input during operation, the motor coasts since the inverter being reset shuts off the output. Also, the cumulative values of electronic thermal O/L relay and regenerative brake duty are cleared.

The input of the PU reset key is only enabled when the protective function is activated, regardless of the P.E100 and Pr. 75 settings.

**Disconnected PU detection (P.E101)**

If the PU (FR-DU08/FR-PU07) is detected to be disconnected from the inverter for 1 s or longer while P.E101 = "1" or Pr. 75 = "2, 3, 16, 17, 102, 103, 116, or 117", PU disconnection (E.PUE) is displayed and the inverter output is shut off.

**NOTES**

When the PU has been disconnected since before power-ON, the output is not shut off.

To restart, confirm that the PU is connected and then reset.

When P.E101 = "0" or Pr. 75 = "0, 1, 14, 15, 100, 101, 114, or 115" (operation continues even when PU disconnected), decelerates to a stop when PU is disconnected during PU JOG operation.

When RS-485 communication operation is performed through the PU connector, the reset selection/PU stop selection function is valid but the disconnected PU detection function is invalid. (The communication is checked according to Pr. 122 "PU communication check time interval".)

**PU stop selection (P.E102)**

- Stop can be performed by inputting STOP RESET from the PU in any of the operation modes of PU operation, External operation and network operation.
- When stop is performed by the PU stop function, "PS" is displayed on the PU. A fault output is not provided.
- When P.E102 = "0" or Pr. 75 = "0 to 3, 100 to 103" is set, deceleration stop using STOP RESET is valid only in the PU operation mode.

**NOTE**

When Pr. 551 "PU mode operation command source selection" = "1" (PU mode RS-485 terminal), deceleration stop is performed even when STOP RESET is input during operation in PU mode via RS-485 communication.

**How to restart after stopping with STOP/RESET input from the PU during External operation (PU stop (PS) release method)**

- PU stop release method for operation panel (FR-DU08)

① After completion of deceleration to a stop, switch OFF the STF and STR signal.

② Press PU/EXT key three times. ( PS release)
(When Pr. 79 "Operation mode selection" = "0 (initial value) or 6")
When Pr. 79 = "2, 3, or 7", PU stop can be released by pressing one time.

- PU stop release method for parameter unit (FR-PU07)

① After completion of deceleration to a stop, switch OFF the STF or STR signal.

② Press EXT key. ( PS release)

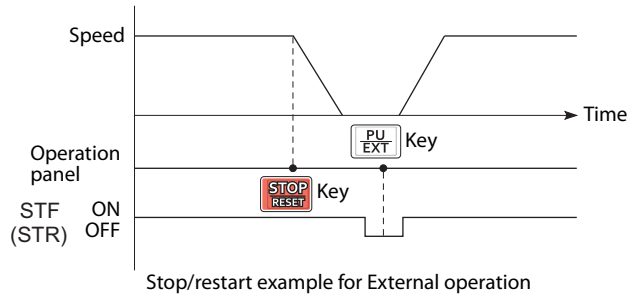


***Fig. 5-70:*** *Stop during external operation*

- The motor can be restarted by resetting the power supply or resetting with a RES signal.

**NOTE**

Even when Pr. 250 "Stop selection" ≠ "9999" is set and coasting stop is selected, deceleration stop and not coasting stop is performed in the PU stop function during External operation.

**Reset limit function (P.E107)**

- When P.E107 = "1" or Pr. 75 = any of "100 to 103 and 114 to 117", if an electronic thermal O/L relay or an overcurrent protective function (E.THM, E.THT, E.OC[]) is activated while one of them has been already activated within 3 minutes, the inverter will not accept any reset command (RES signal, etc.) for about 3 minutes from the second activation.
- The reset limit function is available with the FR-A820-03800(75K) or higher and FR-A840-02160(75K) or higher.

**NOTES**

Resetting the inverter power (turning OFF the control power) will clear the accumulated thermal value.

When the retry function is set enabled (Pr. 67 "Number of retries at fault occurrence" ≠ "0"), the reset limit function is disabled.

**CAUTION:**

***Do not perform a reset while a start signal is being input. Doing so will cause a sudden start of the motor, which is dangerous.***

| Parameters referred to | | | |
|---|---|---|---|
| Pr. 67 | Number of retries at fault occurrence | => | page 5-297 |
| Pr. 79 | Operation mode selection | => | page 5-255 |
| Pr. 250 | Stop selection | => | page 5-417 |
| Pr. 551 | PU mode operation command source selection | => | page 5-266 |

### 5.7.3 PU display language selection

The display language of the parameter unit (FR-PU07) can be selected.

| Pr. | Name | Initial value | Setting range | Description |
|---|---|---|---|---|
| 145<br>E103 | PU display language selection | 1 | 0 | Japanese |
| | | | 1 | English |
| | | | 2 | German |
| | | | 3 | French |
| | | | 4 | Spanish |
| | | | 5 | Italian |
| | | | 6 | Swedish |
| | | | 7 | Finnish |

### 5.7.4 Buzzer control

The buzzer can be set to "beep" when the keys of the operation panel (FR-DU08) and parameter unit (FR-PU07) are operated.

| Pr. | Name | Initial value | Setting range | Description |
|---|---|---|---|---|
| 990<br>E104 | PU buzzer control | 1 | 0 | Without buzzer |
| | | | 1 | With buzzer |

**NOTE** When with buzzer is set, the buzzer sounds if an inverter fault occurs.

### 5.7.5 PU contrast adjustment

Contrast adjustment of the LCD of the parameter unit (FR-PU07) can be performed.

Decreasing the setting value makes the contrast lighter.

| Pr. | Name | Initial value | Setting range | Description |
|---|---|---|---|---|
| 991<br>E105 | PU contrast adjustment | 58 | 0 to 63 | 0: Light → 63: Dark |

The above parameter is displayed as a simple mode parameter only when the parameter unit (FR-PU07) is connected.

## 5.7.6 Display-off mode

The LED of the operation panel can be turned OFF when it has not been used for a certain period of time.

| Pr. | Name | Initial value | Setting range | Description |
|---|---|---|---|---|
| 1048<br>E106 | Display-off waiting time | 0 | 0 | Display-off mode disabled |
| | | | 1 to 60 min | Set time until the LED of the operation panel is turned OFF. |

- If the operation panel has not been operated for the time set in Pr. 1048, the display-off mode is enabled and its LED is turned OFF.
- In the display-off mode, the "MON" LED flickers slowly.
- The count to display off is reset at installation/removal of the operation panel, power-ON/OFF of the inverter, or inverter reset.
- Display-off mode end condition
  - Operation of the operation panel
  - Occurrence of a warning, alarm, or fault
  - Installation/removal of the operation panel, power-ON/OFF of the inverter, or inverter reset
  - Connection/disconnection of the USB A connector

**NOTE** The "P.RUN" LED is on in the display-off mode (when the PLC function is operating).

## 5.7.7 Resetting USB host errors

When a USB device is connected to the USB connector (connector A), the USB host error can be canceled without performing an inverter reset.

| Pr. | Name | Initial value | Setting range | Description |
|---|---|---|---|---|
| 1049<br>E110 | USB host reset | 0 | 0 | Read only |
| | | | 1 | Resets the USB host. |

- Parameter copy (refer to page 5-678) and the trace function (refer to page 5-568) can be used when a USB device (such as a USB memory) is connected to the USB connector (connector A).
- When a device such as a USB charger is connected to the USB connector and an excessive current (500 mA or higher) flows, USB host error UF (UF warning) is displayed on the operation panel.
- If a UF warning occurs, disconnect the USB device and set Pr. 1049 = "1" to cancel the USB error. (The UF warning can also be canceled by resetting the inverter power or resetting with the RES signal.)

## 5.7.8 Setting dial potentiometer mode/key lock operation selection

The setting dial of the operation panel (FR-DU08) can be used for setting like a potentiometer. The key operation of the operation panel can be disabled.

| Pr. | Name | Initial value | Setting range | Description | |
|---|---|---|---|---|---|
| 161<br>E200 | Frequency setting/key lock operation selection | 0 | 0 | Setting dial frequency setting mode | Key lock mode disabled |
| | | | 1 | Setting dial potentiometer mode | |
| | | | 10 | Setting dial frequency setting mode | Key lock mode enabled |
| | | | 11 | Setting dial potentiometer mode | |

**Using the setting dial like a potentiometer to set the frequency**

The frequency can be set by simply turning the setting dial of the operation panel (FR-DU08) during operation.
The SET key needs not to be pressed. (For the details of the operation method, refer to page 4-15.)

**NOTES**

If the display changes from flickering "60.00" to "0.00", the setting value of Pr. 161 may not be "1".

The newly-set frequency will be saved as the set frequency in EEPROM after 10 s.

When setting the frequency by turning the setting dial, the frequency goes up to the set value of Pr. 1 "Maximum frequency" (initial value: 200 Hz). Be aware of what frequency Pr. 1 is set to, and adjust the setting of Pr. 1 according to the application.

**Disabling the setting dial and key operation of the operation panel (Press and hold [MODE] (2 s))**

- Operation using the setting dial and keys of the operation panel can be disabled to prevent parameter changes, unexpected starts or frequency changes.
- Set Pr. 161 to "10 or 11" and then press MODE key for 2 s to disable setting dial or key operations.
- When setting dial and key operations are disabled, LOCd appears on the operation panel. If setting dial or key operation is attempted while dial and key operations are disabled, LOCd appears. (When a setting dial or key operation is not performed for 2 s, the monitor display appears.)
- To enable the setting dial and key operation again, press MODE key for 2 s.

**NOTES**

Even if setting dial and key operations are disabled, the monitor indicator and STOP/RESET key are enabled.

The PU stop cannot be released with key operations unless the operation lock is released first.

| Parameters referred to | | | |
|---|---|---|---|
| Pr. 1 | Maximum frequency | => | page 5-300 |

## 5.7.9 Frequency change increment amount setting

When setting the set frequency with the setting dial of the operation panel, the frequency changes in 0.01 Hz increments in the initial status. Setting this parameter to increase the frequency incrementa-mount that changes when the setting dial is rotated can improve usability.

| Pr. | Name | Initial value | Setting range | Description |
|---|---|---|---|---|
| 295<br>E201 | Frequency change increment amount setting | 0 | 0 | Function invalid |
| | | | 0.01 | The minimum change width when the set frequency is changed with the setting dial can be set. |
| | | | 0.10 | |
| | | | 1.00 | |
| | | | 10.00 | |

### Basic operation

When Pr. 295 ≠ "0" is set, the minimum increment when the set frequency is changed with the setting dial can be set.
For example, when Pr. 295 = "1.00 Hz" is set, one click (one dial gauge) of the setting dial changes the frequency in increments of 1.00 Hz, such as 1.00 Hz → 2.00 Hz → 3.00 Hz.

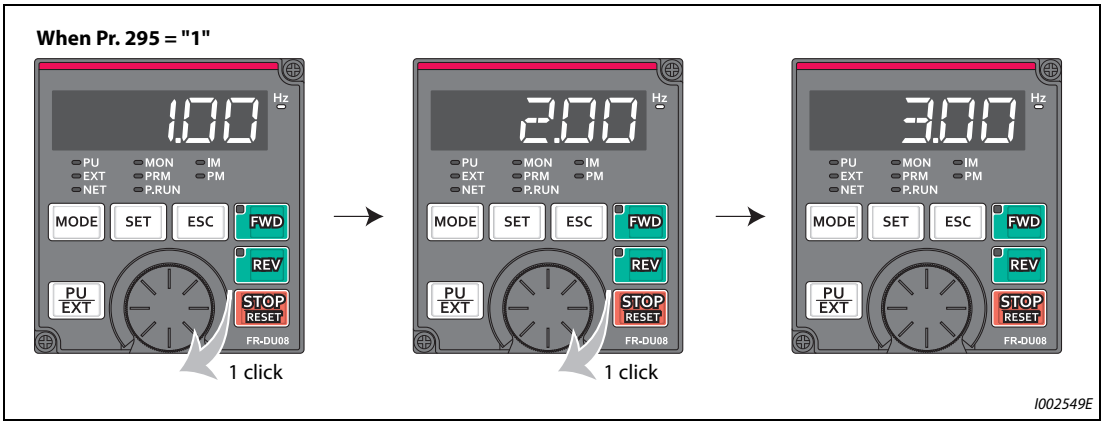


***Fig. 5-71:*** *Magnitude when parameter 295 is set to "1.00"*

**NOTES**

When machine speed display is selected in Pr. 37 "Speed display", the minimum increments of change are determined by Pr. 295 as well. Note that the setting value may differ because the speed setting performs frequency conversion for the set machine speed, and then reverse-converts it to the speed display again.

For Pr. 295, the increments are not displayed.

The Pr. 295 setting is enabled only for changes to the set frequency. It does not apply to the settings of other parameters related to frequency.

When 10 is set, the frequency setting changes in 10 Hz increments. Be cautious of excessive speed (in potentiometer mode).

| Parameters referred to | | | |
|---|---|---|---|
| Pr. 37 | Speed display | => | page 5-314 |

## 5.7.10 Multiple rating setting

Four rating types of different rated current and permissible load can be selected. The optimal inverter rating can be chosen in accordance with the application, enabling equipment size to be reduced.

| Pr. | Name | Initial value | Setting range | Description (overload current rating, surrounding air temperature) |
|---|---|---|---|---|
| 570<br>E301 | Multiple rating setting | 2 | 0 ① | SLD rating<br>110% 60 s, 120% 3 s (inverse-time characteristics)<br>Surrounding air temperature 40 °C |
| | | | 1 | LD rating<br>120% 60 s, 150% 3 s (inverse-time characteristics)<br>Surrounding air temperature 50 °C |
| | | | 2 | ND rating<br>150% 60 s, 200% 3 s (inverse-time characteristics)<br>Surrounding air temperature 50 °C |
| | | | 3 ① | HD rating<br>200% 60 s, 250% 3 s (inverse-time characteristics)<br>Surrounding air temperature 50 °C |

① Not compatible with the IP55 compatible model.

### Changing the parameter initial values and setting ranges

- When inverter reset and all parameter clear are performed after setting Pr. 570, the parameter initial values are changed according to each rating, as shown below.

| Pr. | Name | Pr. 570 setting | | | | Refer to |
|---|---|---|---|---|---|---|
| | | 0 | 1 | 2 (Initial value) | 3 | |
| 0 | Torque boost | ① | ① | ① | ① | 5-629 |
| 7 | Acceleration time | ① | ① | ① | ① | 5-225 |
| 8 | Deceleration time | ① | ① | ① | ① | 5-225 |
| 9 | Electronic thermal O/L relay | SLD rated current ② | LD rated current ② | ND rated current ② ③ | HD rated current ② ③ | 5-284 |
| 12 | DC injection brake operation voltage | ① | ① | ① | ① | 5-640 |
| 22 | Stall prevention operation level | 110% | 120% | 150% | 200% | 5-83, 5-304 |
| 48 | Second stall prevention operation level | 110% | 120% | 150% | 200% | 5-304 |
| 56 | Current monitoring reference | SLD rated current ② | LD rated current ② | ND rated current ② | HD rated current ② | 5-330 |
| 114 | Third stall prevention operation level | 110% | 120% | 150% | 200% | 5-304 |
| 148 | Stall prevention level at 0 V input | 110% | 120% | 150% | 200% | 5-304 |
| 149 | Stall prevention level at 10 V input | 120% | 150% | 200% | 250% | 5-304 |
| 150 | Output current detection level | 110% | 120% | 150% | 200% | 5-365 |
| 165 | Stall prevention operation level for restart | 110% | 120% | 150% | 200% | 5-540 |
| 557 | Current average value monitor signal output reference current | SLD rated current ② | LD rated current ② | ND rated current ② | HD rated current ② | 5-221 |
| 893 | Energy saving monitor reference (motor capacity) | SLD rated motor capacity ② | LD rated motor capacity ② | ND rated motor capacity ② | HD rated motor capacity ② | 5-182 |

***Tab. 5-69:*** *Influence of Pr. 570 on other parameters*

① Initial values differ depending on the rating as follows.

| Pr. | Pr. 570 setting | 200 V class FR-A820-□ | | | | | | | | | | | | | | | | |
|---|---|---|---|---|---|---|---|---|---|---|---|---|---|---|---|---|---|---|
| | | 00046 (0.4K) | 00077 (0.75K) | 00105 (1.5K) | 00167 (2.2K) | 00250 (3.7K) | 00340 (5.5K) | 00490 (7.5K) | 00630 (11K) | 00770 (15K) | 00930 (18.5K) | 01250 (22K) | 01540 (30K) | 01870 (37K) | 02330 (45K) | 03160 (55K) | 03800 (75K) | 04750 (90K) |
| | | 400 V class FR-A840-□ | | | | | | | | | | | | | | | | |
| | | 00023 (0.4K) | 00038 (0.75K) | 00052 (1.5K) | 00083 (2.2K) | 00126 (3.7K)s | 00170 (5.5K) | 00250 (7.5K) | 00310 (11K) | 00380 (15K) | 00470 (18.5K) | 00620 (22K) | 00770 (30K) | 00930 (37K) | 01160 s(45K) | 01800 (55K) | 02160 (75K) | 02600 (90K) or higher |
| 0 [%] | 0, 1 | 6 | 6 | 4 | 4 | 4 | 3 | 3 | 2 | 2 | 2 | 2 | 2 | 2 | 1.5 | 1.5 | 1 | 1 |
| | 2, 3 | 6 | 6 | 4 | 4 | 4 | 3 | 3 | 2 | 2 | 2 | 2 | 2 | 2 | 2 | 2 | 1 | 1 |
| 7 [s] | 0, 1 | 5 | 5 | 5 | 5 | 5 | 5 | 15 | 15 | 15 | 15 | 15 | 15 | 15 | 15 | 15 | 15 | 15 |
| | 2 | 5 | 5 | 5 | 5 | 5 | 5 | 5 | 15 | 15 | 15 | 15 | 15 | 15 | 15 | 15 | 15 | 15 |
| | 3 | 5 | 5 | 5 | 5 | 5 | 5 | 5 | 5 | 15 | 15 | 15 | 15 | 15 | 15 | 15 | 15 | 15 |
| 8 [s] | 0, 1 | 10 | 10 | 10 | 10 | 10 | 10 | 30 | 30 | 30 | 30 | 30 | 30 | 30 | 30 | 30 | 30 | 30 |
| | 2 | 5 | 5 | 5 | 5 | 5 | 5 | 5 | 15 | 15 | 15 | 15 | 15 | 15 | 15 | 15 | 15 | 15 |
| | 3 | 5 | 5 | 5 | 5 | 5 | 5 | 5 | 5 | 15 | 15 | 15 | 15 | 15 | 15 | 15 | 15 | 15 |
| 12 [%] | 0, 1 | 4 | 4 | 4 | 4 | 4 | 4 | 2 | 2 | 2 | 2 | 2 | 2 | 2 | 2 | 1 | 1 | 1 |
| | 2 | 4 | 4 | 4 | 4 | 4 | 4 | 4 | 2 | 2 | 2 | 2 | 2 | 2 | 2 | 2 | 1 | 1 |
| | 3 | 4 | 4 | 4 | 4 | 4 | 4 | 4 | 4 | 2 | 2 | 2 | 2 | 2 | 2 | 2 | 2 | 1 |

***Tab. 5-70:*** *Initial values of Pr. 0, Pr. 7, Pr. 8 and Pr. 12 depending on Pr. 570 setting*

② The rated current and motor capacity differ depending on the inverter capacity. Refer to the inverter rated specifications (page 8-1).

③ The initial value for FR-A820-00077(0.75K) or lower and FR-A840-00038(0.75K) or lower, is set to 85% of the rated inverter current.

● Setting Pr. 292 "Automatic acceleration/deceleration" = "5 or 6 (lift mode)" will change the stall prevention operation level as shown below.

| Pr. | Setting | Pr. 570 setting | | | | Refer to |
|---|---|---|---|---|---|---|
| | | 0 | 1 | 2 (Initial value) | 3 | |
| 292 | 5 | 110% | 120% | 150% | 200% | 5-252 |
| | 6 | 115% | 140% | 180% | 230% | |

***Tab. 5-71:*** *Influence of Pr. 292 on the stall prevention operation level*

**NOTES**

When Pr. 570 = "0" (SLD rating), carrier frequency automatic reduction is enabled regardless of the setting in Pr. 260 "PWM frequency automatic switchover".

To use the FR-A820-03160(55K) and FR-A840-01800(55K) in the LD and SLD ratings, a DC reactor, which is available as an option, corresponding to the applied motor is required.

Setting the LD or SLD rating to the FR-A820-03160(55K) and FR-A840-01800(55K) changes their parameter setting increments and setting ranges in the same way as for the FR-A820-03800(75K) and FR-A840-02160(75K) or higher. For example, the setting increment and the setting range of Pr. 9 will change from "0.01 A" to "0.1 A" and from "0 to 500 A" to "0 to 3600 A". For the setting of each parameter, refer to the parameter list (on page 5-2).

| Parameters referred to | | | |
|---|---|---|---|
| Pr. 260 | PWM frequency automatic switchover | => | page 5-211 |

## 5.7.11 Using the power supply exceeding 480V

To input a voltage between 480 V and 500 V to the 400 V class inverter, change the voltage protection level.

| Pr. | Name | Initial value | Setting range | Description |
|---|---|---|---|---|
| 977<br>E302 | Input voltage mode selection | 0 | 0 | 400 V class voltage protection level |
| | | | 1 | 500 V class voltage protection level |

- To use a voltage between 480 V and 500 V, set Pr. 977 "Input voltage mode selection" = "1". The setting is applied after a reset.
- Setting Pr. 977 = "1" will change the voltage protection level to the one for the 500 V class.
- The increased magnetic excitation deceleration level is changed to 740 V. (Use Pr. 660 "Increased magnetic excitation deceleration operation selection" to select the increased magnetic excitation deceleration.)

**NOTES**

Stand-alone options (except line noise filter) cannot be used when inputting a voltage between 480 and 500 V.

The voltage protection level of the 200 V class inverters is not affected by the Pr. 977 setting.

| Parameters referred to | | | |
|---|---|---|---|
| Pr. 660 | Increased magnetic excitation deceleration operation selection | => | page 5-666 |

## 5.7.12 Parameter write selection

Whether to enable the writing to various parameters or not can be selected. Use this function to prevent parameter values from being rewritten by misoperation.

| Pr. | Name | Initial value | Setting range | Description |
|---|---|---|---|---|
| 77<br>E400 | Parameter write selection | 0 | 0 | Writing is enabled only during stop. |
| | | | 1 | Parameter writing is disabled. |
| | | | 2 | Parameter writing is enabled in any operation mode regardless of the operation status. |

Pr. 77 can be set at any time regardless of the operation mode or operation status. (Setting through communication is unavailable.)

**Writing parameters only during stop (Pr. 77 = "0" initial value)**

- Parameters can be written only during a stop in the PU operation mode.
- The following parameters can always be written regardless of the operation mode or operation status.

| Pr. | Name | Pr. | Name |
|---|---|---|---|
| 4 to 6 | (Multi-speed setting high-speed, middle-speed, low-speed) | 434, 435 | (CC-Link communication) |
| 22 | Stall prevention operation level | 496, 497 | (Remote output) |
| 24 to 27 | (Multi-speed setting speed 4 to speed 7) | 498 | PLC function flash memory clear |
| 52 | Operation panel main monitor selection | 506 to 515 | (User parameter) |
| 54 | FM/CA terminal function selection | 550 ② | NET mode operation command source selection |
| 55 | Frequency monitoring reference | 551 ② | PU mode operation command source selection |
| 56 | Current monitoring reference | 555 to 557 | (Current average value monitor) |
| 72 ① | PWM frequency selection | 656 to 659 | (Analog remote output) |
| 75 | Reset selection/disconnected PU detection/PU stop selection | 755 to 758 | (Second PID control) |
| 77 | Parameter write selection | 759 | PID unit selection |
| 79 ② | Operation mode selection | 774 to 776 | (PU/DU monitor selection) |
| 129 | PID proportional band | 805 | Torque command value (RAM) |
| 130 | PID integral time | 806 | Torque command value (RAM, EEPROM) |
| 133 | PID action set point | 866 | Torque monitoring reference |
| 134 | PID differential time | 888, 889 | (Free parameter) |
| 158 | AM terminal function selection | 891 to 899 | (Energy saving monitor) |
| 160 | User group read selection | C0 (900) | FM/CA terminal calibration |
| 232 to 239 | (Multi-speed setting speed 8 to speed 15) | C1 (901) | AM terminal calibration |
| 240 ① | Soft-PWM operation selection | C8 (930) | Current output bias signal |
| 241 | Analog input display unit switchover | C9 (930) | Current output bias current |
| 268 | Monitor decimal digits selection | C10 (931) | Current output gain signal |
| 271 | High-speed setting maximum current | C11 (931) | Current output gain current |
| 272 | Middle-speed setting minimum current | 990 | PU buzzer control |
| 273 | Current averaging range | 991 | PU contrast adjustment |
| 274 | Current averaging filter time constant | 992 | Operation panel setting dial push monitor selection |
| 275 ① | Stop-on contact excitation current low-speed multiplying factor | 997 | Fault initiation |
| 290 | Monitor negative output selection | 998 ② | PM parameter initialization |
| 295 | Frequency change increment amount setting | 999 ② | Automatic parameter setting |
| 296, 297 | (Password setting) | 1006 | Clock (year) |
| 306 | Analog output signal selection | 1007 | Clock (month, day) |
| 310 | Analog meter voltage output selection | 1008 | Clock (hour, minute) |
| 340 ② | Communication startup mode selection | 1019 | Analog meter voltage negative output selection |
| 345, 346 | (DeviceNet communication) | 1142 | Second PID unit selection |
| 414 ② | PLC function operation selection | 1150 to 1199 | (PLC function user parameters) |
| 415 ② | Inverter operation lock mode setting | 1283 | Home position return speed |
| 416, 417 | (PLC function) | 1284 | Home position return creep speed |

***Tab. 5-72:*** *Parameters, that can always be written regardless of the operation mode or operation status*

① Writing during operation is enabled in PU operation mode, but disabled in External operation mode.

② Writing during operation is disabled. To change the parameter setting value, stop the operation.

**Disabling parameter write (Pr. 77 = "1")**

- Parameter write, parameter clear and all parameter clear are disabled. (Parameter read is enabled.)
- The following parameters can be written even if Pr. 77 = "1".

| Pr. | Name | Pr. | Name |
|---|---|---|---|
| 22 | Stall prevention operation level | 345, 346 | (DeviceNet communication) |
| 75 | Reset selection/disconnected PU detection/PU stop selection | 496, 497 | (Remote output) |
| 77 | Parameter write selection | 498 | PLC function flash memory clear |
| 79 | Operation mode selection | 656 to 659 | (Analog remote output) |
| 160 | User group read selection | 805 | Torque command value (RAM) |
| 296 | Password lock level | 806 | Torque command value (RAM, EEPROM) |
| 297 | Password lock/unlock | 997 | Fault initiation |

***Tab. 5-73:*** *Parameters, that can be written even if Pr. 77 = 1*

**Writing parameters during operation (Pr. 77 = "2")**

- These parameters can always be written.
- The following parameters cannot be written during operation if Pr. 77 = "2". To change the parameter setting value, stop the operation.

| Pr. | Name |
|---|---|
| 23 | Stall prevention operation level compensation factor at double speed |
| 48 | Second stall prevention operation level |
| 49 | Second stall prevention operation frequency |
| 60 | Energy saving control selection |
| 61 | Reference current |
| 66 | Stall prevention operation reduction starting frequency |
| 71 | Applied motor |
| 79 | Operation mode selection |
| 80 | Motor capacity |
| 81 | Number of motor poles |
| 82 | Motor excitation current |
| 83 | Rated motor voltage |
| 84 | Rated motor frequency |
| 90 to 94 | (Motor constant) |
| 95 | Online auto tuning selection |
| 96 | Auto tuning setting/status |
| 135 to 139 | (Electronic bypass sequence parameter) |
| 178 to 196 | (Input and output terminal function selection) |
| 261 | Power failure stop selection |
| 289 | Inverter output terminal filter |
| 291 | Pulse train I/O selection |
| 292 | Automatic acceleration/deceleration |
| 293 | Acceleration/deceleration separate selection |
| 298 | Frequency search gain |
| 313 to 322 | (Extended output terminal function selection) |
| 329 | Digital input unit selection |
| 414 | PLC function operation selection |
| 415 | Inverter operation lock mode setting |
| 418 | Extension output terminal filter |
| 419 | Position command source selection |
| 420, 421 | (Electronic gear) |
| 450 | Second applied motor |
| 451 | Second motor control method selection |
| 453 | Second motor capacity |
| 454 | Number of second motor poles |

| Pr. | Name |
|---|---|
| 455 | Second motor excitation current |
| 456 | Rated second motor voltage |
| 457 | Rated second motor frequency |
| 458 to 462 | (Second motor constant) |
| 463 | Second motor auto tuning setting/status |
| 541 | Frequency command sign selection (CC-Link) |
| 560 | Second frequency search gain |
| 561 | PTC thermistor protection level |
| 570 | Multiple rating setting |
| 574 | Second motor online auto tuning |
| 598 | Undervoltage level |
| 639, 640 | (Brake sequence) |
| 641, 650, 651 | (Second brake sequence) |
| 660, 661, 662 | (Increased magnetic excitation deceleration) |
| 699 | Input terminal filter |
| 702 | Maximum motor frequency |
| 706, 707, 711, 712, 717, 721, 724, 725 | (PM motor tuning) |
| 738 to 746 | (Second PM motor tuning) |
| 747 | Second motor low-speed range torque characteristic selection |
| 788 | Low speed range torque characteristic selection |
| 800 | Control method selection |
| 819 | Easy gain tuning selection |
| 858 | Terminal 4 function assignment |
| 859 | Torque current/Rated PM motor current |
| 860 | Second motor torque current/ Rated PM motor current |
| 868 | Terminal 1 function assignment |
| 977 | Input voltage mode selection |
| 998 | PM parameter initialization |
| 999 | Automatic parameter setting |
| 1002 | Lq tuning target current adjustment coefficient |
| 1103 | Deceleration time at emergency stop |
| 1292 | Position control terminal input selection |
| 1293 | Roll feeding mode selection |

***Tab. 5-74:*** *Parameters, that cannot be written during operation*

## 5.7.13 Password function

Registering a 4-digit password can restrict parameter reading/writing.

| Pr. | Name | Initial value | Setting range | Description |
|---|---|---|---|---|
| 296<br>E410 | Password lock level | 9999 | 0 to 6, 99,<br>100 to 106, 199 | Select restriction level of parameter reading/writing when a password is registered. |
| | | | 9999 | No password lock |
| 297<br>E411 | Password lock/unlock | 9999 | 1000 to 9998 | Register a 4-digit password |
| | | | (0 to 5) ① | Displays password unlock error count. (Reading only)<br>(Valid when Pr. 296 = "100 to 106, or 199") |
| | | | 9999 ① | No password lock |

The above parameters can be set when Pr. 160 "User group read selection" = "0". However, when Pr. 296 ≠ 9999 (password lock is set), Pr. 297 can always be set, regardless of the setting in Pr. 160.

① When Pr. 297 = "0, 9999", writing is always enabled, but setting is disabled. (The display cannot be changed.)

### Parameter reading/writing restriction level (Pr. 296)

The level of the reading/writing restriction using the PU/Network (NET) operation mode operation command can be selected with Pr. 296.

| Pr. 296 setting | PU operation mode operation command ③ | | NET operation mode operation command ④ | | | |
|---|---|---|---|---|---|---|
| | | | RS-485 terminals / PLC function ⑦ | | Communication option | |
| | Read ① | Write ② | Read | Write ② | Read | Write ② |
| 9999 | ○ | ○ | ○ | ○ | ○ | ○ |
| 0, 100 ⑥ | × | × | × | × | × | × |
| 1, 101 | ○ | × | ○ | × | ○ | × |
| 2, 102 | ○ | × | ○ | ○ | ○ | ○ |
| 3, 103 | ○ | ○ | ○ | × | ○ | × |
| 4, 104 | × | × | × | × | ○ | × |
| 5, 105 | × | × | ○ | ○ | ○ | ○ |
| 6, 106 | ○ | ○ | × | × | ○ | × |
| 99 to 199 | Only the parameters registered in the user group can be read/written. ⑤<br>(For the parameters not registered in the user group, same restriction level as "4, 104" applies.) | | | | | |

○: Enabled, ×: Disabled

***Tab. 5-75:*** *Level of password lock and reading/writing restriction*

① If the parameter reading is restricted by the Pr. 160 "User group read selection" setting, those parameters are unavailable for reading even when "○" is indicated.

② If the parameter writing is restricted by the Pr. 77 "Parameter write selection" setting, those parameters are unavailable for writing even when "○" is indicated.

③ This restricts parameter access from the command source that can write a parameter under the PU operation mode (initially the operation panel (FR-DU08) or the parameter unit). (For the PU operation mode command source selection, refer to page 5-266.)

④ This restricts parameter access from the command source that can write a parameter under the Network operation mode (initially the RS-485 terminals or a communication option). (For the NET operation mode command source selection, refer to page 5-266.)

⑤ Read/write is enabled only for the simple mode parameters registered in the user group when Pr. 160 ="9999". Pr. 296 and Pr. 297 are always read/write enabled whether registered to a user group or not.

⑥ If a communication option is installed, an option fault Option fault (E.OPT) occurs, and the inverter output shuts off. (Refer to page 6-26.)

⑦ The PLC function user parameters (Pr. 1150 to Pr. 1199) can be written and read by the PLC function regardless of the Pr. 296 setting.

**Registering a password (Pr. 296, Pr. 297)**

The following section describes how to register a password.

① Set the parameter reading/writing restriction level. (Pr. 296 ≠ "9999")

| Pr. 296 setting | Password unlock error restriction | Pr. 297 display |
|---|---|---|
| 0 to 6, 99 | No restriction | Always displays 0 |
| 100 to 106, 199 ① | Restricted at fifth error | Displays the error count (0 to 5) |

① During Pr. 296 = any of "100 to 106, 199", if password unlock error has occurred 5 times, correct password will not unlock the restriction. All parameter clear can unlock the restriction. (In this case, the parameters are returned to their initial values.)

② Write a four-digit number (1000 to 9998) in Pr. 297 as a password. (Writing is disabled when Pr. 296 = "9999".) When a password is registered, parameter reading/writing is restricted with the restriction level set in Pr. 296 until unlocking.

**NOTES**

After registering a password, the read value of Pr. 297 is always one of "0 to 5".

LOCd appears when a password restricted parameter is read/written.

Even if a password is registered, the parameters, which the inverter itself writes, such as inverter parts life are overwritten as needed.

Even if a password is registered, reading/writing is enabled for Pr. 991 "PU contrast adjustment" when the parameter unit (FR-PU07) is connected.

**Unlocking a password (Pr. 296, Pr. 297)**

There are two ways of unlocking the password.

- Enter the password in Pr. 297. If the password matches, it unlocks. If the password does not match, an error occurs and the password does not unlock. When any of "100 to 106, or 199" is set in Pr. 296 and a password unlock error occurs five times, the restriction will not be unlocked even if the correct password is subsequently input. (Password lock in operation.)
- Perform all parameter clear.

**NOTES**

If the password is forgotten, it can be unlocked with all parameter clear, but doing so will also clear the other parameters.

All parameter clear cannot be performed during the operation.

During the conditions where parameter reading is disabled (Pr. 296 = any of "0, 4, 5, 99, 100, 104, 105, or 199"), do not use FR Configurator2. It may not operate correctly.

The password unlocking method differs between the operation panel (FR-DU08), parameter unit (FR-PU07), RS-485 communication and communication option.

| | FR-DU08/FR-PU07 | RS-485 communication | Communication option |
|---|---|---|---|
| All parameter clear | ○ | ○ | ○ |
| Parameter clear | × | × | ○ |

○: Password can be unlocked, ×: Password cannot be unlocked

For the parameter clear and parameter all clear methods for the communication option and parameter unit (FR-PU07), refer to the Instruction Manual of each option. (For the operation panel (FR-DU08), refer to page 5-676, for the Mitsubishi inverter protocol of RS-485 communication, refer to page 5-589, and for the Modbus-RTU communication protocol, refer to page 5-607.)

### Parameter operations during password locking/unlocking

| Operation | | Password unlocked | | Password locked | Password lock in operation |
|---|---|---|---|---|---|
| | | Pr. 296 = 9999<br>Pr. 297 = 9999 | Pr. 296 ≠ 9999<br>Pr. 297 = 9999 | Pr. 296 ≠ 9999<br>Pr. 297 = 0 to 4 (read value) | Pr. 296 = 100 to 106, 199<br>Pr. 297 = 5 (read value) |
| Pr. 296 | Read | ○ ① | ○ | ○ | ○ |
| | Write | ○ ① | ○ ① | × | × |
| Pr. 297 | Read | ○ ① | ○ | ○ | ○ |
| | Write | × | ○ | ○ | ○ |
| Parameter clear execution | | ○ | ○ | × ④ | × ④ |
| All parameter clear execution | | ○ | ○ | ○ ② | ○ ② |
| Parameter copy execution | | ○ | ○ | × | × |

○: Enabled, ×: Disabled

***Tab. 5-76:*** *Parameter operation during password lock/unlock*

① Reading/writing is disabled if reading is restricted by the Pr. 160 setting. (Reading is available in the Network operation mode regardless of the Pr. 160 setting.)

② All parameter clear cannot be performed during the operation.

③ Correct password will not unlock the restriction.

④ Parameter clear can only be performed from the communication option.

**NOTES**

When Pr. 296 = "4, 5, 104, or 105" (password lock), the setting screen for PU JOG frequency is not displayed in the parameter unit (FR-PU07).

When the password is being locked, parameter copy using the operation panel (FR-DU08), parameter unit (FR-PU07) and USB memory is not enabled.

| Parameters referred to | | | |
|---|---|---|---|
| Pr. 77 | Parameter write selection | => | page 5-195 |
| Pr. 160 | User group read selection | => | page 5-208 |
| Pr. 550 | NET mode operation command source selection | => | page 5-266 |
| Pr. 551 | PU mode operation command source selection | => | page 5-266 |

## 5.7.14 Free parameter

Any number within the setting range of 0 to 9999 can be input.

For example, these numbers can be used:

- As a unit number when multiple units are used.
- As a pattern number for each operation application when multiple units are used.
- As the year and month of introduction or inspection.

| Pr. | Name | Initial value | Setting range | Description |
|---|---|---|---|---|
| 888<br>E420 | Free parameter 1 | 9999 | 0 to 9999 | Any value can be input. The settings are retained even if the inverter power is turned OFF. |
| 889<br>E421 | Free parameter 2 | 9999 | 0 to 9999 | |

**NOTE** Pr. 888 and Pr. 889 do not influence the operation of the inverter.

## 5.7.15 Setting multiple parameters as a batch

Parameter settings are changed as a batch. Those include communication parameter settings for the Mitsubishi's human machine interface (GOT) connection and the parameter setting for the rated frequency settings of 50 Hz/60 Hz and acceleration/deceleration time.

Multiple parameters are changed automatically. Users do not have to consider each parameter number. (Automatic parameter setting mode)

| Pr. | Name | Initial value | Setting range | Description | |
|---|---|---|---|---|---|
| 999<br>E431 | Automatic parameter setting | 9999 ① | 1 | Standard PID display setting | |
| | | | 2 | Extended PID display setting | |
| | | | 10 | GOT initial setting (PU connector) | "Controller Type" in GOT: FREQROL 500/700/800, SENSORLESS SERVO |
| | | | 11 | GOT initial setting (RS-485 terminals) | |
| | | | 12 | GOT initial setting (PU connector) | "Controller Type" in GOT: FREQROL 800 (Automatic Negotiation) |
| | | | 13 | GOT initial setting (RS-485 terminal) | |
| | | | 20 | 50 Hz rated frequency | |
| | | | 21 | 60 Hz rated frequency | |
| | | | 9999 | No action | |

① The read value is always "9999".

### Automatic parameter setting (Pr. 999)

Select which parameters to automatically set from the table below, and set them in Pr. 999. Multiple parameter settings are changed automatically. Refer to page 5-206 for the list of parameters that are changed automatically.

| Pr. 999 Setting | Description | | Operation in the automatic parameter setting mode |
|---|---|---|---|
| 1 | Sets the standard monitor indicator setting of PID control. | | AUTO (AUTO) → PID (PID) → Write "1" |
| 2 | Automatically sets the monitor indicator for PID control. | | AUTO (AUTO) → PID (PID) → Write "2" |
| 10 | Automatically sets the communication parameters for the GOT connection with a PU connector ("Controller Type" in GOT: FREQROL 500/700/800, SENSORLESS SERVO) | | AUTO (AUTO) → GOT (GOT) → Write "1" |
| 11 | Automatically sets the communication parameters for the GOT connection with RS-485 terminals ("Controller Type" in GOT: FREQROL 500/700/800, SENSORLESS SERVO) | | — |
| 12 | Automatically sets the communication parameters for the GOT connection with a PU connector ("Controller Type" in GOT: FREQROL 800(Automatic Negotiation)) | | AUTO (AUTO) → GOT (GOT) → Write "2" |
| 13 | Automatically sets the communication parameters for the GOT connection with RS-485 terminals ("Controller Type" in GOT: FREQROL 800(Automatic Negotiation)) | | — |
| 20 | 50 Hz rated frequency | Sets the related parameters of the rated frequency according to the power supply frequency | AUTO (AUTO) → F50 (F50) → Write "1" |
| 21 | 60 Hz rated frequency | | — |

***Tab. 5-77:*** *Automatic parameter setting*

**NOTE**

If the automatic setting is performed with Pr. 999 or the automatic parameter setting mode, the settings including the changed parameter settings (changed from the initial setting) will be automatically changed. Before performing the automatic setting, confirm that changing the parameters will not cause any problem.

**PID monitor indicator setting (Pr. 999 = "1 or 2")**

| Pr. | Name | Initial value | Pr. 999 = "1" | Pr. 999 = "2" | Refer to page |
|---|---|---|---|---|---|
| 759 | PID unit selection | 9999 | 9999 | 4 | 5-521 |
| 1142 | Second PID unit selection | 9999 | 9999 | 4 | |
| 774 | Operation panel monitor selection 1 | 9999 | 9999 | 52 | 5-317 |
| 775 | Operation panel monitor selection 2 | 9999 | 9999 | 53 | |
| 776 | Operation panel monitor selection 3 | 9999 | 9999 | 54 | |
| C42 (934) | PID display bias coefficient | 9999 | 9999 | 0 | 5-521 |
| C44 (935) | PID display gain coefficient | 9999 | 9999 | 100 | |
| 1136 | Second PID display bias coefficient | 9999 | 9999 | 0 | |
| 1138 | Second PID display gain coefficient | 9999 | 9999 | 100 | |
| — | 3-step monitor setting | — | Disabled | Enabled ① | — |
| — | Extended direct setting | — | Disabled | Enabled ① | — |
| — | Dedicated parameter list function | — | Disabled | Enabled ① | — |

***Tab. 5-78:*** *GOT initial setting (PU connector)*

① Enabled when the FR-PU07-01 is used.

- 3-line monitor setting
  The 3-line monitor is used as the first monitor.
- Extended direct setting

  Pressing the FUNC key of the FR-PU07-01 displays the extended direct setting screen. The PID action set point can be directly set regardless of the operation mode or Pr. 77 "Parameter write selection" setting.
  Pressing the FUNC key on the extended direct setting screen displays the function menu.

| Extended direct setting | Parameter to be set |
|---|---|
| Extended direct setting 1 | Pr. 133 PID action set point |
| Extended direct setting 2 | Pr. 755 Second PID action set point |

***Tab. 5-79:****Parameter to be set by extended direct setting*

- Dedicated parameter list function

  Pressing the PrSET key of the FR-PU07-01 displays the dedicated parameter list. Parameters that need to be set first for the PID extended display setting are listed.

| Dedicated parameter list | Parameter to be set |
|---|---|
| No. 1 | Pr. 999 Automatic parameter setting |
| No. 2 | Pr. 934 PID display bias coefficient |
| No. 3 | Pr. 935 PID display gain coefficient |

***Tab. 5-80:****Parameter to be set by dedicated parameter list*

**NOTE**

The display of parameters other than the above may be changed due to changes in C42 or C44. Set the PID monitor indicator before changing the settings of other parameters.

**GOT initial setting (PU connector) (Pr. 999 = "10, 12")**

| Pr. | Name | Initial value | Pr. 999 = "10" | Pr. 999 = "12" | Refer to page |
|---|---|---|---|---|---|
| 79 | Operation mode selection | 0 | 1 | 1 | 5-255 |
| 118 | PU communication speed | 192 | 192 | 1152 | 5-587 |
| 119 | PU communication stop bit length | 1 | 10 | 0 | |
| 120 | PU communication parity check | 2 | 1 | 1 | |
| 121 | Number of PU communication retries | 1 | 9999 | 9999 | |
| 122 | PU communication check time interval | 9999 | 9999 | 9999 | |
| 123 | PU communication waiting time setting | 9999 | 0 ms | 0 ms | |
| 124 | PU communication CR/LF selection | 1 | 1 | 1 | |
| 340 | Communication startup mode selection | 0 | 0 | 0 | 5-264 |
| 414 | PLC function operation selection | 0 | — | 2 ① | 5-564 |

***Tab. 5-81:*** *GOT initial setting (PU connector)*

① When Pr. 414 = "1", the setting value is not changed.

- Initial setting with the GOT2000 series
  - When "FREQROL 500/700/800, SENSORLESS SERVO" is selected for "Controller Type" in the GOT setting, set Pr. 999 = "10" to configure the GOT initial setting.
  - When "FREQROL 800(Automatic Negotiation)" is selected for "Controller Type" in the GOT setting, the GOT automatic connection can be used. When "FREQROL 800(Automatic Negotiation)" is selected for "Controller Type" in the GOT setting and the GOT automatic connection is not used, set Pr. 999="12" to configure the GOT initial setting. (Refer to page 5-626 .)
- Initial setting with the GOT1000 series
  - Set Pr. 999 = "10" to configure the GOT initial setting.

**NOTES**

Always perform an inverter reset after the initial setting.

For the details of connection with GOT, refer to the Instruction Manual of GOT.

**GOT initial setting (RS-485 terminals) (Pr. 999 = "11, 13")**

| Pr. | Name | Initial value | Pr. 999 = "11" | Pr. 999 = "13" | Refer to page |
|---|---|---|---|---|---|
| 79 | Operation mode selection | 0 | 0 | 1 | 5-255 |
| 332 | RS-485 communication speed | 96 | 192 | 1152 | 5-587 |
| 333 | RS-485 communication stop bit length | 1 | 10 | 0 | |
| 334 | RS-485 communication parity check selection | 2 | 1 | 1 | |
| 335 | RS-485 communication retry count | 1 | 9999 | 9999 | |
| 336 | RS-485 communication check time interval | 0 s | 9999 | 9999 | |
| 337 | RS-485 communication waiting time setting | 9999 | 0 ms | 0 ms | |
| 340 | Communication startup mode selection | 0 | 1 | 1 | 5-264 |
| 341 | RS-485 communication CR/LF selection | 1 | 1 | 1 | 5-587 |
| 414 | PLC function operation selection | 0 | — | 2 ① | 5-564 |
| 549 | Protocol selection | 0 | 0 | 0 | 5-607 |

***Tab. 5-82:*** *GOT initial setting (RS-485 terminals)*

① When Pr. 414 = "1", the setting value is not changed.

- Initial setting with the GOT2000 series
  - When "FREQROL 500/700/800, SENSORLESS SERVO" is selected for "Controller Type" in the GOT setting, set Pr. 999 = "11" to configure the GOT initial setting.
  - When "FREQROL 800(Automatic Negotiation)" is selected for "Controller Type" in the GOT setting, the GOT automatic connection can be used. When "FREQROL 800(Automatic Negotiation)" is selected for "Controller Type" in the GOT setting and the GOT automatic connection is not used, set Pr. 999="13" to configure the GOT initial setting. (Refer to page 5-626 .)
- Initial setting with the GOT1000 series
  - Set Pr. 999 = "10" to configure the GOT initial setting.

**NOTES**

Always perform an inverter reset after the initial setting.

For the details of connection with GOT, refer to the Instruction Manual of GOT.

**Rated frequency (Pr. 999 = "20 (50 Hz), 21 (60 Hz)")**

| Pr. | Name | Initial value | | Pr. 999 = "21" | Pr. 999 = "20" | Refer to page |
|---|---|---|---|---|---|---|
| | | FM type | CA type | | | |
| 3 | Base frequency | 60 Hz | 50 Hz | 60 Hz | 50 Hz | 5-631 |
| 4 | Multi-speed setting (high speed) | 60 Hz | 50 Hz | 60 Hz | 50 Hz | 5-182 |
| 20 | Acceleration/deceleration reference frequency | 60 Hz | 50 Hz | 60 Hz | 50 Hz | 5-225 |
| 37 | Speed display | 0 | | 0 | | 5-314 |
| 55 | Frequency monitoring reference | 60 Hz | 50 Hz | 60 Hz | 50 Hz | 5-330 |
| 66 | Stall prevention operation reduction starting frequency | 60 Hz | 50 Hz | 60 Hz | 50 Hz | 5-83 |
| 116 | Third output frequency detection | 60 Hz | 50 Hz | 60 Hz | 50 Hz | 5-83 |
| 125 (903) | Terminal 2 frequency setting gain frequency | 60 Hz | 50 Hz | 60 Hz | 50 Hz | 5-388 |
| 126 (905) | Terminal 4 frequency setting gain frequency | 60 Hz | 50 Hz | 60 Hz | 50 Hz | |
| 263 | Subtraction starting frequency | 60 Hz | 50 Hz | 60 Hz | 50 Hz | 5-558 |
| 266 | Power failure deceleration time switchover frequency | 60 Hz | 50 Hz | 60 Hz | 50 Hz | |
| 386 | Frequency for maximum input pulse | 60 Hz | 50 Hz | 60 Hz | 50 Hz | 5-274 |
| 505 | Speed setting reference | 60 Hz | 50 Hz | 60 Hz | 50 Hz | 5-314 |
| 808 | Forward rotation speed limit/ speed limit | 60 Hz | 50 Hz | 60 Hz | 50 Hz | 5-133 |
| C14 (918) | Terminal 1 gain frequency (speed) | 60 Hz | 50 Hz | 60 Hz | 50 Hz | 5-388 |

***Tab. 5-83:*** *Influence of Pr. 999 on the rated frequencies*

## 5.7.16 Extended parameter display and user group function

This function restricts the parameters that are read by the operation panel and parameter unit.

| Pr. | Name | Initial value | Setting range | Description |
|---|---|---|---|---|
| 160<br>E440 | User group read selection | 0 | 9999 | Only simple mode parameters can be displayed. |
| | | | 0 | Simple mode and extended parameters can be displayed. |
| | | | 1 | Only parameters registered in user groups can be displayed. |
| 172<br>E441 | User group registered display/ batch clear | 0 | (0 to 16) | Displays the number of groups that are registered as user groups. (Read-only) |
| | | | 9999 | Batch clear of user group registrations |
| 173<br>E442 | User group registration | 9999 ① | 0 to 1999, 9999 | Sets the parameter number to register for the user group. |
| 174<br>E443 | User group clear | 9999 ① | 0 to 1999, 9999 | Sets the parameter number to clear from the user group. |

① The read value is always "9999".

**Display of simple mode parameters and extended parameters (Pr. 160)**

- When Pr. 160 = "9999", only the simple mode parameters can be displayed on the operation panel (FR-DU08) and parameter unit (FR-PU07). (For the simple mode parameters, refer to the parameter list page 5-2.)
- With the initial value (Pr. 160 = "0"), simple mode parameters and extended parameters can be displayed.

**NOTES**

When a plug-in option in installed on the inverter, the option parameters can also be read.

Every parameter can be read regardless of the Pr. 160 setting when reading parameters via a communication option.

When reading the parameters using the RS-485 terminals, all parameters can be read regardless of the Pr. 160 setting by setting Pr. 550 "NET mode operation command source selection" and Pr. 551 "PU mode operation command source selection".

| Pr. 551 | Pr. 550 | Pr. 160 enabled/disabled |
|---|---|---|
| 1 (RS-485) | — | Enabled |
| 2 (PU)<br>3 (USB)<br>9999 (Automatic determination) (Initial value) | 0 (Communication option) | Enabled |
| | 1 (RS-485) | Disabled (All can be read) |
| | 9999 (Automatic determination) (Initial value) | With communication option: Enabled |
| | | Without communication option: Disabled (All can be read) |

When the parameter unit (FR-PU07) is installed, Pr. 15 "Jog frequency", Pr. 16 "Jog acceleration/deceleration time", C42 (Pr. 934) "PID display bias coefficient", C43 (Pr. 934) "PID display bias analog value", C44 (Pr. 935) "PID display gain coefficient", C45 (Pr. 935) "PID display gain analog value" and Pr. 991 "PU contrast adjustment" are displayed as simple mode parameters.

**User group function (Pr. 160, Pr. 172 to Pr. 174)**

- The user group function is a function for displaying only the parameters required for a setting.
- A maximum of 16 parameters from any of the parameters can be registered in a user group. When Pr. 160 = "1", reading/writing is enabled only for the parameters registered in user groups. (Parameters not registered in user groups can no longer be read.)
- To register a parameter in a user group, set the parameter number in Pr. 173.
- To clear a parameter from a user group, set the parameter number in Pr. 174. To batch clear all the registered parameters, set Pr. 172 = "9999".

### Registering a parameter in a user group (Pr. 173)

● To register Pr. 3 in a user group

| Operation |
|---|
| ① Power ON<br>Make sure the motor is stopped. |
| ② Changing the operation mode<br>Press [PU/EXT] to choose the PU operation mode. [PU] indicator is lit. |
| ③ Parameter setting mode<br>Press [MODE] to select the parameter setting mode. (The parameter number read previously appears.) |
| ④ Selecting the parameter number<br>Turn ⊛ until P. 173 (Pr. 173) appears. |
| ⑤ Selecting the parameter number<br>Press [SET] to display " 9999 ". |
| ⑥ Parameter registration<br>Turn ⊛ until 3 (Pr. 3) appears. Press [SET] to register the parameter.<br>P. 173 and 3 flicker alternately.<br>To continue adding parameters, repeat steps ⑤ and ⑥. |

***Tab. 5-84:*** *When registering Pr. 3 to user group*

### Clearing a parameter from a user group (Pr. 174)

● To delete Pr. 3 from a user group

| Operation |
|---|
| ① Power ON<br>Make sure the motor is stopped. |
| ② Changing the operation mode<br>Press [PU/EXT] to choose the PU operation mode. [PU] indicator is lit. |
| ③ Parameter setting mode<br>Press [MODE] to select the parameter setting mode. (The parameter number read previously appears.) |
| ④ Selecting the parameter number<br>Turn ⊛ until P. 174 (Pr. 174) appears. |
| ⑤ Selecting the parameter number<br>Press [SET] to display " 9999 ". |
| ⑥ Clearing the parameter<br>Turn ⊛ until 3 (Pr. 3) appears. Press [SET] to delete the parameter.<br>P. 174 and 3 flicker alternately.<br>To continue deleting parameters, repeat steps ⑤ and ⑥. |

***Tab. 5-85:*** *When deleting Pr. 3 from user group*

**NOTES**

Pr. 77 "Parameter write selection", Pr. 160 and Pr. 991 "PU contrast adjustment" can always be read regardless of the user group setting. (For Pr. 991, only when the FR-PU07 is connected.)

Pr. 77, Pr. 160, Pr. 172 to Pr. 174, Pr. 296 "Password lock level", and Pr. 297 "Password lock/unlock" cannot be registered in a user group.

When Pr. 174 is read, "9999" is always displayed. "9999" can be written, but it does not function.

Pr. 172 is disabled if set to a value other than "9999".

| Parameters referred to | | | |
|---|---|---|---|
| Pr. 15 | Jog frequency | => | page 5-278 |
| Pr. 16 | Jog acceleration/deceleration time | => | page 5-278 |
| Pr. 77 | Parameter write selection | => | page 5-195 |
| Pr. 296 | Password lock level | => | page 5-199 |
| Pr. 297 | Password lock/unlock | => | page 5-199 |
| Pr. 550 | NET mode operation command source selection | => | page 5-266 |
| Pr. 551 | PU mode operation command source selection | => | page 5-266 |
| Pr. 991 | PU contrast adjustment | => | page 5-188 |

## 5.7.17 PWM carrier frequency and Soft-PWM control

The motor sound can be changed.

| Pr. | Name | Initial value | Setting range | Description |
|---|---|---|---|---|
| 72<br>E600 | PWM frequency selection | 2 | 0 to 15 ① | The PWM carrier frequency can be changed. The setting displayed is in [kHz].<br>Note that 0 indicates 0.7 kHz, 15 indicates 14.5 kHz, and 25 indicates 2.5 kHz. (The setting value "25" is for the sine wave filter.) |
| | | | 0 to 6, 25 ② | |
| 240<br>E601 | Soft-PWM operation selection | 1 | 0 | Soft-PWM disabled |
| | | | 1 | The soft-PWM is enabled. |
| 260<br>E602 | PWM frequency automatic switchover | 1 | 0 | The PWM carrier frequency is constant regardless of the load.<br>When the carrier frequency is set to 3 kHz or higher (Pr. 72 ≥ 3), perform continuous operation at less than 85% of the inverter rated current. |
| | | | 1 | When the load increases, the PWM carrier frequency is reduced. |

① The setting range for the FR-A820-03160(55K) or lower and FR-A840-01800(55K) or lower.

② The setting range for the FR-A820-03800(75K) or higher and FR-A840-02160(75K) and higher.

### Changing the PWM carrier frequency (Pr. 72)

- The PWM carrier frequency of the inverter can be changed.
- Changing the PWM carrier frequency can be effective for avoiding the resonance frequency of the mechanical system or motor, as a countermeasure against EMI generated from the inverter, or for reducing leakage current caused by PWM switching.
- Under Real sensorless vector control, vector control, and PM sensorless vector control, the following carrier frequencies are used. (For the control method and fast-response mode selection, refer to Pr. 800 "Control method selection" page 5-55.)

| Pr. 72 setting | Carrier frequency (kHz) | | |
|---|---|---|---|
| | Real sensorless vector control, vector control | PM sensorless vector control | Fast-response mode |
| 0 to 5 | 2 | 6 ① | 4 |
| 6, 7 | 6 ② | 6 | |
| 8, 9 | | | |
| 10 to 13 | 10 ② | 10 | |
| 14, 15 | 14 ② | 14 | |

***Tab. 5-86:*** *Carrier frequencies in different control modes*

① When low-speed range high-torque characteristic is disabled (Pr. 788 = "0"), 2 kHz is used.

② In the low-speed range (3 Hz or lower) under Real sensorless vector control, the carrier frequency is automatically changed to 2 kHz.
(For FR-A820-00490(7.5K) or lower and FR-A840-00250(7.5K) or lower)

- When using the optional sine wave filter (MT-BSL/BSC), set Pr. 72 = "25" (2.5 kHz).
(FR-A820-03800(75K) or higher, FR-A840-02160(75K).)

**NOTE**

When Pr. 72 = "25", the following limitations apply.
- V/F control is forcibly set.
- Soft-PWM control is disabled.
- The maximum output frequency is 60 Hz.

### Soft-PWM control (Pr. 240)

- Soft-PWM control is a control method that changes the motor noise from a metallic sound into an inoffensive, complex tone.
- Setting Pr. 240 = "1" will enable the Soft-PWM control.
- To enable the Soft-PWM control for the FR-A820-03160(55K) or lower and FR-A840-01800(55K) or lower, set Pr. 72 to "5 kHz or less".
To enable it for the FR-A820-03800(75K) or higher and FR-A840-02160(75K) or higher, set Pr. 72 to "4 kHz or less".

**NOTE**

While a sine wave filter (Pr. 72 = "25") is being used, the Soft-PWM control is disabled.

**PWM carrier frequency automatic reduction function (Pr. 260)**

- Setting Pr. 260 = "1 (initial value)" will enable the PWM carrier frequency auto-reduction function. If a heavy load is continuously applied while the inverter carrier frequency is set to 3 kHz or higher (Pr. 72 ≥ "3"), the carrier frequency is automatically reduced to prevent occurrence of the inverter overload trip (electronic thermal O/L relay function) (E.THT). The carrier frequency is reduced to as low as 2 kHz. (Motor noise increases, but not to the point of failure.)
- With the LD and SLD ratings (Pr. 570 "Multiple rating setting" = "0 or 1"), the auto-reduction function is activated for a continuous operation with the 85% or higher rated inverter current.
- With the ND and HD ratings (Pr. 570 = "2 or 3"), the auto-reduction function is activated for a continuous operation with the 150% or higher rated inverter current.
- When continuous operation with FR-A840-03250(110K) or higher is performed at 85% of the rated inverter current or higher, the automatic reduction function is activated regardless of the Pr. 570 setting.
- When Pr. 260 = "0", the carrier frequency becomes constant (Pr. 72 setting) regardless of the load, making the motor sound uniform. However, when the SLD rating is selected, (Pr. 570 = "0"), the operation is the same as Pr. 260 = "1".

**NOTES**

Reducing the PWM carrier frequency is effective as a countermeasure against EMI from the inverter or for reducing leakage current, but doing so increases the motor noise.

When the PWM carrier frequency is set to 1 kHz or lower (Pr. 72 ≤ 1), the increase in the harmonic current causes the fast-response current limit to activate before the stall prevention operation, which may result in torque shortage. In this case, disable the fast-response current limit in Pr. 156 "Stall prevention operation selection".

The lower limit of carrier frequency after the reduction under PM sensorless vector control (low-speed range high-torque characteristic enabled) is 6 kHz.

During fast-response operation, the carrier frequency automatic reduction function is disabled.

| Parameters referred to | | | |
|---|---|---|---|
| Pr. 156 | Stall prevention operation selection | => | page 5-83 |
| Pr. 570 | Multiple rating setting | => | page 5-193 |
| Pr. 788 | Low speed range torque characteristic selection | => | page 5-74 |
| Pr. 800 | Control method selection | => | page 5-55 |

## 5.7.18 Inverter parts life display

The degree of deterioration of the control circuit capacitor, main circuit capacitor, cooling fan, and inrush current limit circuit can be diagnosed on the monitor.
When a part approaches the end of its life, an alarm can be output by self diagnosis to prevent a fault. (Note that the life diagnosis of this function should be used as a guideline only, because with the exception of the main circuit capacitor, the life values are theoretical calculations.)

| Pr. | Name | Initial value | Setting range | Description |
|---|---|---|---|---|
| 255<br>E700 | Life alarm status display | 0 | (0 to 15) ① | Displays whether or not the parts of the control circuit capacitor, main circuit capacitor, cooling fan, and inrush current limit circuit have reached the life alarm output level. Read-only. |
| 256<br>E701 ② | Inrush current limit circuit life display | 100% | (0 to 100%) | Displays the deterioration degree of the inrush current limit circuit. Read-only. |
| 257<br>E702 | Control circuit capacitor life display | 100% | (0 to 100%) | Displays the deterioration degree of the control circuit capacitor. Read-only. |
| 258<br>E703 ② | Main circuit capacitor life display | 100% | (0 to 100%) | Displays the deterioration degree of the main circuit capacitor. Read-only.<br>The value measured by Pr. 259 is displayed. |
| 259<br>E704 ② | Main circuit capacitor life measuring | 0 | 0, 1<br>(2, 3, 8, 9) | Setting "1" and turning the power supply OFF starts the measurement of the main circuit capacitor life.<br>If the setting value of Pr. 259 becomes "3" after turning the power supply ON again, it means that the measurement is completed. The deterioration degree is read to Pr. 258. |

① The setting range (reading only) for separated converter types is "0, 1, 4 or 5". The setting range (reading only) for IP55 compatible modes is "0 to 31".

② The setting is available only for standard models and IP55 compatible models.

### Life alarm display and signal output (Y90 signal, Pr. 255)

**NOTE**

In the life diagnosis of the main circuit capacitor, the alarm signal (Y90) is not output unless measurement by turning OFF the power supply is performed.

- Whether or not the parts of the control circuit capacitor, main circuit capacitor, cooling fan, inrush current limit circuit, or internal air circulation fans have reached the life alarm output level can be checked with Pr. 255 "Life alarm status display" and the life alarm signal (Y90). (Internal air circulation fans are equipped with IP55 compatible models.)

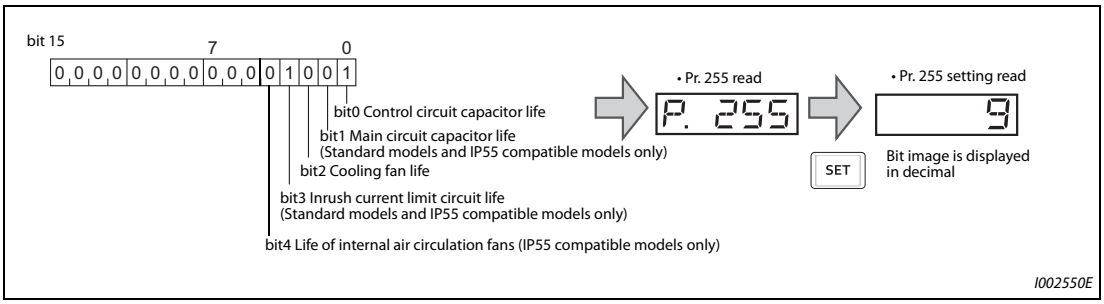


***Fig. 5-72:*** *Bits of parameter 255*

| Pr. 255 | | bit3 | bit2 | bit1 | bit0 |
|---|---|---|---|---|---|
| Decimal | Binary | | | | |
| 15 | 1111 | ○ | ○ | ○ | ○ |
| 14 | 1110 | ○ | ○ | ○ | × |
| 13 | 1101 | ○ | ○ | × | ○ |
| 12 | 1100 | ○ | ○ | × | × |
| 11 | 1011 | ○ | × | ○ | ○ |
| 10 | 1010 | ○ | × | ○ | × |
| 9 | 1001 | ○ | × | × | ○ |
| 8 | 1000 | ○ | × | × | × |
| 7 | 0111 | × | ○ | ○ | ○ |
| 6 | 0110 | × | ○ | ○ | × |
| 5 | 0101 | × | ○ | × | ○ |
| 4 | 0100 | × | ○ | × | × |
| 3 | 0011 | × | × | ○ | ○ |
| 2 | 0010 | × | × | ○ | × |
| 1 | 0001 | × | × | × | ○ |
| 0 | 0000 | × | × | × | × |

| Pr. 255 | | bit4 | bit3 | bit2 | bit1 | bit0 |
|---|---|---|---|---|---|---|
| Deci-mal | Binary | | | | | |
| 31 | 1111 | ○ | ○ | ○ | ○ | ○ |
| 30 | 1110 | ○ | ○ | ○ | ○ | × |
| 29 | 1101 | ○ | ○ | ○ | × | ○ |
| 28 | 1100 | ○ | ○ | ○ | × | × |
| 27 | 1011 | ○ | ○ | × | ○ | ○ |
| 26 | 1010 | ○ | ○ | × | ○ | × |
| 25 | 1001 | ○ | ○ | × | × | ○ |
| 24 | 1000 | ○ | ○ | × | × | × |
| 23 | 0111 | ○ | × | ○ | ○ | ○ |
| 22 | 0110 | ○ | × | ○ | ○ | × |
| 21 | 0101 | ○ | × | ○ | × | ○ |
| 20 | 0100 | ○ | × | ○ | × | × |
| 19 | 0011 | ○ | × | × | ○ | ○ |
| 18 | 0010 | ○ | × | × | ○ | × |
| 17 | 0001 | ○ | × | × | × | ○ |
| 16 | 0000 | ○ | × | × | × | × |

○: With warnings, ×: Without warnings

***Tab. 5-87:*** *Displaying the end of service life by bits*

- The life alarm signal (Y90) turns ON when any of the control circuit capacitor, main circuit capacitor, cooling fan, inrush current limit circuit, or internal air circulation fans reaches the life alarm output level.
- For the terminal used for the Y90 signal, set "90" (positive logic) or "190" (negative logic) in any of Pr. 190 to Pr. 196 (output terminal function selection).

**NOTES**

When using an option (FR-A8AY, FR-A8AR, FR-A8NC, FR-A8NCE), the life can be output separately to the control circuit capacitor life signal (Y86), main circuit capacitor life signal (Y87), cooling fan life signal (Y88), and inrush current limit circuit life signal (Y89).

Changing the terminal assignment using Pr. 190 to Pr. 196 (output terminal function selection) may affect the other functions. Set parameters after confirming the function of each terminal.

**Life display of the inrush current limit circuit (Pr. 256)**
**(Standard models and IP55 compatible models)**

- The life of the inrush current limit circuit (relay, contactor and inrush resistor) is displayed in Pr. 256.
- The number of contact (relay, contactor, thyristor) ON times is counted, and it is counted down from 100% (0 time) every 1%/10,000 times. As soon as 10% (900,000 times) is reached, Pr. 255 bit 3 is turned ON and also a warning is output to the Y90 signal.

**Life display of the control circuit capacitor (Pr. 257)**

- The deterioration degree of the control circuit capacitor is displayed in Pr. 257.
- In the operating status, the control circuit capacitor life is calculated from the energization time and temperature, and is counted down from 100%. As soon as the control circuit capacitor life falls below 10%, Pr. 255 bit 0 is turned ON and also a warning is output to the Y90 signal.

**Life display of the main circuit capacitor (Pr. 258, Pr. 259)**
**(Standard models and IP55 compatible models)**

**NOTE**

For accurate life measurement of the main circuit capacitor, wait three hours or longer after turning OFF. The temperature left in the main circuit capacitor affects measurement.

- The deterioration degree of the main circuit capacitor is displayed in Pr. 258.
- With the main circuit capacitor capacity at factory shipment as 100%, the capacitor life is displayed in Pr. 258 every time measurement is made. When the measured value falls to 85% or lower, Pr. 255 bit 1 is turned ON and also a warning is output to the Y90 signal.
- Measure the capacitor capacity according to the following procedure and check the deterioration degree of the capacitor capacity.

  ① Check that the motor is connected and at a stop.
  ② Set "1" (measuring start) in Pr. 259.
  ③ Switch the power OFF. The inverter applies DC voltage to the motor to measure the capacitor capacity while the inverter is OFF.
  ④ After confirming that the power lamp is OFF, turn ON the power again.
  ⑤ Check that "3" (measurement complete) is set in Pr. 259, read Pr. 258, and check the deterioration degree of the main circuit capacitor.

| Pr. 259 | Description | REMARKS |
|---|---|---|
| 0 | No measurement | Initial value |
| 1 | Measurement start | Measurement starts when the power supply is switched OFF |
| 2 | During measurement | Only displayed and cannot be set |
| 3 | Measurement complete | |
| 8 | Forced end | |
| 9 | Measurement error | |

***Tab. 5-88:*** *Parameter 259*

**NOTES**

When the main circuit capacitor life is measured under the following conditions, "forced end" (Pr. 259 = "8") or", measurement error" (Pr. 259 = "9") may occur, or the status may remain in "measurement start" (Pr. 259 = "1"). To perform measurement, first eliminate the following conditions. Under the following conditions, even if "measurement complete" (Pr. 259 = "3") is reached, measurement cannot be performed correctly.

- FR-HC2, FR-CV, MT-RC, or a sine wave filter is connected.
- Terminals R1/L11, S1/L21 or DC power supply is connected to terminals P/+ and N/-.
- The power supply is switched ON during measurement.
- The motor is not connected to the inverter.
- The motor is running (coasting).
- The motor capacity is smaller than the inverter capacity by two ranks or more.
- The inverter is tripped or a fault occurred while the power was OFF.
- The inverter output is shut off with the MRS signal.
- The start command is given while measuring.
- The applied motor setting is incorrect.

Operation environment: surrounding air temperature (annual average of 40 °C (free from corrosive gas, flammable gas, oil mist, dust and dirt)).
Output current (80% of the inverter rating)

Since repeated inrush currents at power ON will shorten the life of the converter circuit, frequent starts and stops of the magnetic contactor must be avoided.

**WARNING:**

***When measuring the main circuit capacitor capacity (Pr. 259 = "1"), the DC voltage is applied to the motor for about 1 s at power OFF. Never touch the motor terminal, etc. right after powering OFF to prevent an electric shock.***

**Life display of the cooling fan**

- If a cooling fan speed of less than the specified speed (refer below) is detected, Fan alarm FN (FN) is displayed on the operation panel (FR-DU08) and parameter unit (FR-PU07). As an alarm display, Pr. 255 bit 2 is turned ON and also a warning is output to the Y90 signal and Alarm (LF) signal.
- For the terminal used for the LF signal, set "98" (positive logic) or "198" (negative logic) in any of Pr. 190 to Pr. 196 (output terminal function selection).

| Capacity | Warning level |
|---|---|
| FR-A820-00250(3.7K) or lower, FR-A820-03160(55K) or higher<br>FR-A840-00126(3.7K) or lower | Less than 50% of the rated rotations per minute |
| FR-A820-00340(5.5K) to FR-A820-02330(45K)<br>FR-A840-00170(5.5K) to FR-A840-03610(132K)<br>FR-A846-00250(7.5K) to FR-A826-00470(18.5K) | Less than 70% of the rated rotations per minute |
| FR-A840-04320(160K) or higher<br>FR-A842-07700(315K) or higher | Approx. less than 1700 r/min |

***Tab. 5-89:*** *Warning level of different inverters*

**NOTES**

When the inverter is mounted with two ore more cooling fans, "FN" is displayed with one or more fans with speed of 50% or less.

Changing the terminal assignment using Pr. 190 to Pr. 196 (output terminal function selection) may affect the other functions. Set parameters after confirming the function of each terminal.

For replacement of each part, contact the nearest Mitsubishi FA center.

**Life display of internal air circulation fans (IP55 compatible models)**

- IP55 compatible models are equipped with the internal air circulation fan inside the inverter other than the cooling fan. The internal fan fault FN2 (FN2) appears on the operation panel (FR-DU08) when the rotations per minute is less than 70% of the rated value for the internal air circulation fan. (FN is displayed on the parameter unit (FR-PU07).) As an alarm display, Pr. 255 bit 4 is turned ON and also a warning is output to the Y90 signal and Alarm (LF) signal.
- For the terminal used for the LF signal, set "98" (positive logic) or "198" (negative logic) in any of Pr. 190 to Pr. 196 (output terminal function selection).

**NOTES**

Changing the terminal assignment using Pr. 190 to Pr. 196 (output terminal function selection) may affect the other functions. Set parameters after confirming the function of each terminal.

For replacement of each part, contact the nearest Mitsubishi FA center.

## 5.7.19 Maintenance timer alarm

The maintenance timer output signal (Y95) is output when the inverter's cumulative energization time reaches the time period set with the parameter. MT1, MT2 or MT3 is displayed on the operation panel (FR-DU08).

This can be used as a guideline for the maintenance time of peripheral devices.

| Pr. | Name | Initial value | Setting range | Description |
|---|---|---|---|---|
| 503<br>E710 | Maintenance timer 1 | 0 | 0 (1 to 9998) | Displays the inverter's cumulative energization time in increments of 100 h (read-only).<br>Writing the setting of "0" clears the cumulative energization time while Pr. 503 = "1 to 9998". (Writing is disabled when Pr. 503 = "0".) |
| 504<br>E711 | Maintenance timer 1 warning output set time | 9999 | 0 to 9998 | Set the time until the maintenance timer signal (Y95) is output.<br>MT1 is displayed on the operation panel. |
| | | | 9999 | No function |
| 686<br>E712 | Maintenance timer 2 | 0 | 0 (1 to 9998) | The same function as Pr. 503. |
| 687<br>E713 | Maintenance timer 2 warning output set time | 9999 | 0 to 9998 | The same function as Pr. 504.<br>MT2 is displayed on the operation panel. |
| | | | 9999 | |
| 688<br>E714 | Maintenance timer 3 | 0 | 0 (1 to 9998) | The same function as Pr. 503. |
| 689<br>E715 | Maintenance timer 3 warning output set time | 9999 | 0 to 9998 | The same function as Pr. 504.<br>MT3 is displayed on the operation panel. |
| | | | 9999 | |

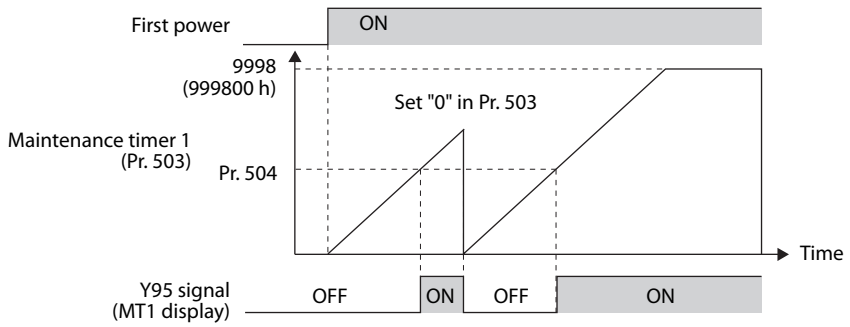


***Fig. 5-73:*** *Maintenance timer*

- The cumulative energization time of the inverter is stored in the EEPROM every hour and displayed in Pr. 503 (Pr. 686, Pr. 688) in 100 h increments. Pr. 503 (Pr. 686, Pr. 688) is clamped at 9998 (999800 h).
- When the value in Pr. 503 (Pr. 686, Pr. 688) reaches the time (100 h increments) set in Pr. 504 (Pr. 687, Pr. 689), Maintenance timer signal (Y95) is output, and also MT 1 (MT1), MT 2 (MT2), or MT 3 (MT3) is displayed on the operation panel.
- For the terminal used for Y95 signal output, assign the function by setting "95 (positive logic)" or "195 (negative logic)" in any of Pr. 190 to Pr. 196 (output terminal function selection).

**NOTES**

The Y95 signal turns ON when any of MT1, MT2 or MT3 is activated. It does not turn OFF unless all of MT1, MT2 and MT3 are cleared.

If all of MT1, MT2 and MT3 are activated, they are displayed in the priority of "MT1 > MT2 > MT3".

MT is displayed on the FR-PU07 parameter unit if any of MT1, MT2 or MT3 is activated.

The cumulative energization time is counted every hour. Energization time of less than 1 h is not counted.

Changing the terminal assignment using Pr. 190 to Pr. 196 (output terminal function selection) may affect the other functions. Set parameters after confirming the function of each terminal.

| Parameters referred to | | | |
|---|---|---|---|
| Pr. 190 to Pr. 196 | (output terminal function selection) | => | page 5-350 |

## 5.7.20 Current average value monitor signal

The output current average value during constant-speed operation and the maintenance timer value are output to the current average value monitor signal (Y93) as a pulse. The output pulse width can be used in a device such as the I/O unit of a programmable controller as a guideline for the maintenance time for mechanical wear, belt stretching, or deterioration of devices with age.

The pulse is repeatedly output during constant-speed operation in cycles of 20 s to the Current average monitor signal (Y93).

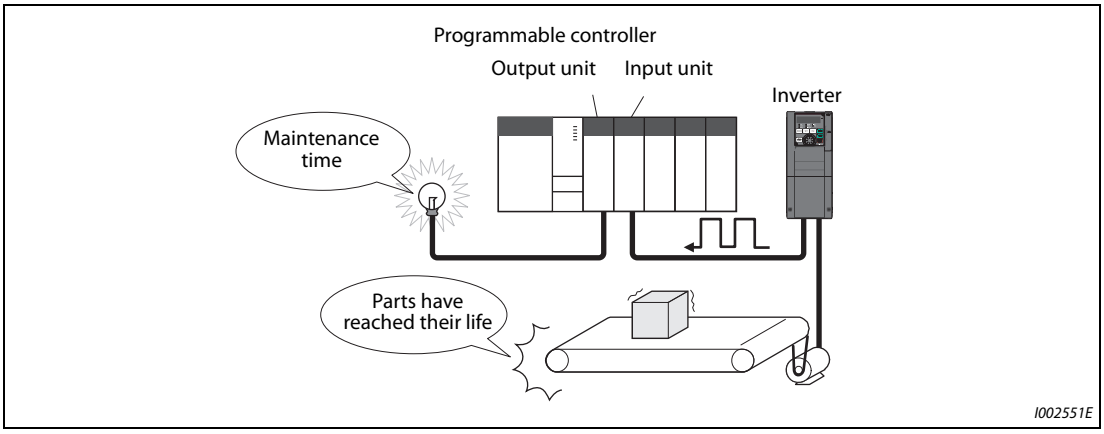


***Fig. 5-74:*** *Monitoring the maintenance timer and current average value*

| Pr. | Name | Initial value | Setting range | Description |
|---|---|---|---|---|
| 555<br>E720 | Current average time | 1 s | 0.1 to 1 s | Set the time for calculating the average current during start pulse output (1 s). |
| 556<br>E721 | Data output mask time | 0 s | 0 to 20 s | Set the time for not obtaining (masking) transitional state data. |
| 557<br>E722 | Current average value monitor signal output reference current | Rated inverter current | 0 to 500 A ① | Set the reference (100%) for outputting the output current average value signal. |
| | | | 0 to 3600 A ② | |

① Initial value for the FR-A820-03160(55K) or lower and FR-A840-01800(55K) or lower.

② Initial value for the FR-A820-03800(75K) or higher and FR-A840-02160(75K) and higher.

**Operation example**

- The pulse output of Current average monitor signal (Y93) is indicated below.
- For the terminal used for Y93 signal output, assign the function by setting "93 (positive logic)" or "193 (negative logic)" in any of Pr. 190 to Pr. 194 (output terminal function selection). (This cannot be assigned by setting in Pr. 195 "ABC1 terminal function selection" or Pr. 196 "ABC2 terminal function selection".)

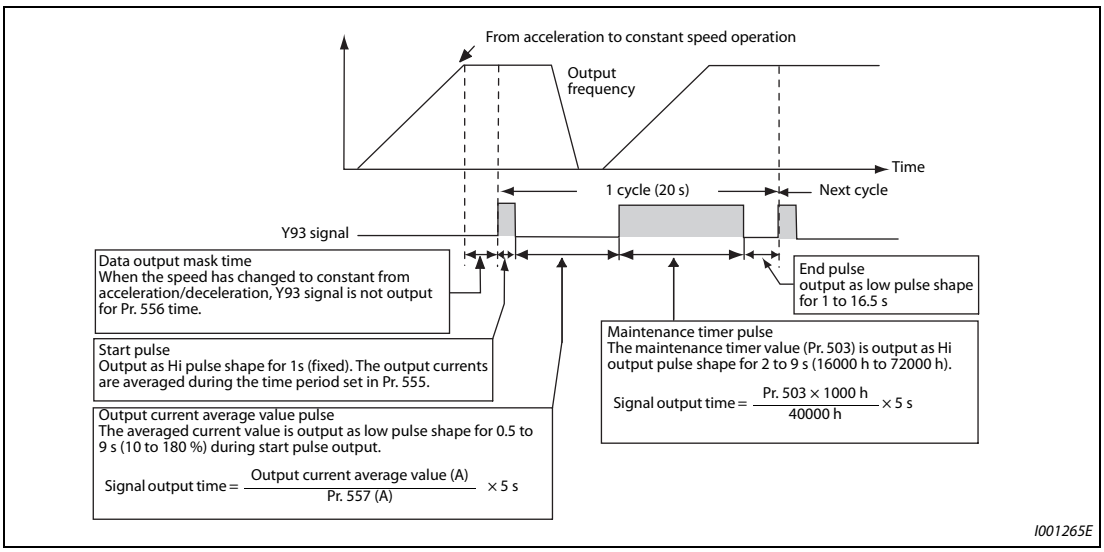


***Fig. 5-75:*** *Output of the pulse signal Y93*

**Pr. 556 "Data output mask time setting"**

- Immediately after acceleration/deceleration is shifted to constant-speed operation, the output current is unstable (transitional state). Set the time for not obtaining (masking) transitional state data in Pr. 556.

**Pr. 555 "Current average time setting"**

- The output current average is calculated during start pulse (1 s) HIGH output. Set the time for calculating the average current during start pulse output in Pr. 555.

**Pr. 557 "Current average value monitor signal output reference current setting"**

- Set the reference (100%) for outputting the output current average value signal. The signal output time is calculated with the following formula.

$$\frac{\text{Output current average value}}{\text{Pr. 557 setting value}} \times 5\ \text{s}\quad \text{(Output current average value 100\%/5 s)}$$

The output time range is 0.5 to 9 s. When the output current average value is less than 10% of the setting value in Pr. 557, the output time is 0.5 s, and when it is more than 180%, the output time is 9 s.

For example, when Pr. 557 = "10 A" and the output current average value is 15 A:

15 A/10 A × 5 s = 7.5 s, thus the current average value monitor signal is Low output in 7.5 s intervals.

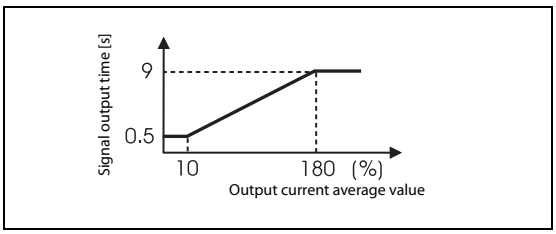


***Fig. 5-76:***
*Signal output time for the current average value*

**Pr. 503 "Maintenance timer 1 output"**

After LOW output of the output current value is performed, HIGH output of the maintenance timer value is performed. The maintenance timer value output time is calculated with the following formula.

$$\frac{\text{Pr. } 503 \times 100}{40000\ \text{h}} \times 5\ \text{s}\ \ \text{(Maintenance timer value 100\%/5 s)}$$

The output time range is 2 to 9 s. When Pr. 503 is less than 16000 h, the output time is 2 s, and when it is more than 72000 h, the output time is 9 s.

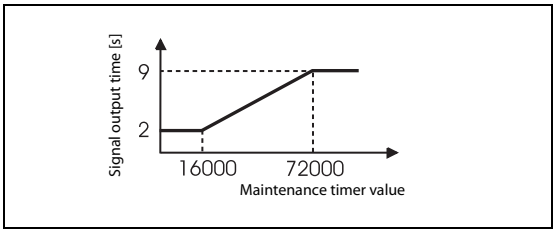


***Fig. 5-77:***
*Signal output time for the maintenance output value*

I001267E

**NOTES**

Masking of the data output and sampling of the output current are not performed during acceleration/deceleration.

If constant speed changes to acceleration or deceleration during start pulse output, it is judged as invalid data, and HIGH output in 3.5 s intervals is performed for the start pulse and LOW output in 16.5 s intervals is performed for the end signal. After the start pulse output is completed, minimum 1-cycle signal output is performed even if acceleration/deceleration is performed.

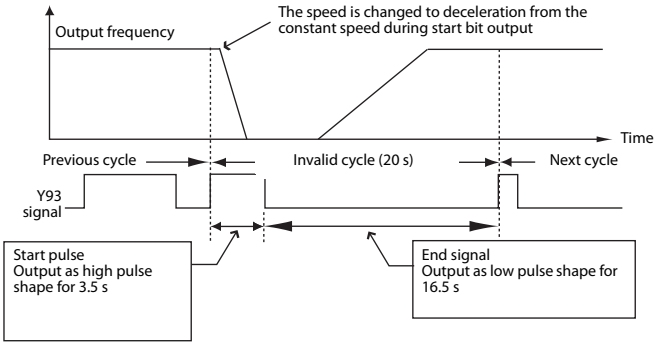


If the output current value (inverter output current monitor) is 0 A at the completion of the 1-cycle signal output, no signal is output until the next constant-speed state.

Under the following conditions, the Y93 signal is output with Low output in 20 s intervals (no data output).

- When acceleration or deceleration is operating at the completion of the 1-cycle signal output
- When automatic restart after instantaneous power failure (Pr. 57 "Restart coasting time" ≠ "9999") is set, and the 1-cycle signal output is completed during the restart operation
- When automatic restart after instantaneous power failure (Pr. 57 ≠ "9999") is set, and the restart operation was being performed at the completion of data output masking

Pr. 686 "Maintenance timer 2" and Pr. 688 "Maintenance timer 3" cannot be output.

Changing the terminal assignment using Pr. 190 to Pr. 196 (output terminal function selection) may affect the other functions. Set parameters after confirming the function of each terminal.

| Parameters referred to | | | |
|---|---|---|---|
| Pr. 57 | Restart coasting time | => | page 5-540, page 5-549 |
| Pr. 190 to Pr. 196 | (output terminal function selection) | => | page 5-350 |
| Pr. 503 | Maintenance timer 1 | => | page 5-219 |
| Pr. 686 | Maintenance timer 2 | => | page 5-219 |
| Pr. 688 | Maintenance timer 3 | => | page 5-219 |

# 5.8 (F) Setting of acceleration/deceleration time and acceleration/deceleration pattern

| Purpose | Parameter to set | | | Refer to page |
|---|---|---|---|---|
| To set the motor acceleration/ deceleration time | Acceleration/deceleration time | P.F000 to P.F003, P.F010, P.F011, P.F020 to P.F022, P.F030, P.F031, P.F040, P.F070, P.F071 | Pr. 7, Pr. 8, Pr. 16, Pr. 20, Pr. 21, Pr. 44, Pr. 45, Pr. 110, Pr. 111, Pr. 147, Pr. 611, Pr. 791, Pr. 792, Pr.1103 | 5-225 |
| To set the acceleration/deceleration pattern suitable for application | Acceleration/deceleration pattern and backlash measures | P.F100, P.F200 to P.F204, P.F300 to P.F304, P.F400 to P.F404 | Pr. 29, Pr. 140 to Pr. 143, Pr. 380 to Pr. 383, Pr. 516 to Pr. 519 | 5-232 |
| To command smooth speed transition with terminals | Remote setting function | P.F101 | Pr. 59 | 5-239 |
| To set the starting frequency | Starting frequency and start-time hold | P.F102, P.F103 | Pr. 13, Pr. 571 | 5-243, 5-245 |
| To set optimum acceleration/ deceleration time automatically | Automatic acceleration/ deceleration | P.F500, P.F510 to P.F513 | Pr. 61 to Pr. 63, Pr. 292 | 5-247 |
| To set V/F pattern for lift automatically | Lift operation (Automatic acceleration/ deceleration) | P.F500, P.F510, P.F520 | Pr. 61, Pr. 64, Pr. 292 | 5-252 |

## 5.8.1 Setting the acceleration and deceleration time

The following parameters are used to set motor acceleration/deceleration time.

Set a larger value for a slower acceleration/deceleration, and a smaller value for a faster acceleration/ deceleration.

For the acceleration time at automatic restart after instantaneous power failure, refer to Pr. 611 "Acceleration time at a restart" (page 5-540, page 5-549).

| Pr. | Name | Initial value | | Setting range | Description | |
|---|---|---|---|---|---|---|
| | | FM | CA | | | |
| 20 F000 | Acceleration/deceleration reference frequency | 60 Hz | 50 Hz | 1 to 590 Hz | Set the frequency that will be the basis of acceleration/deceleration time. As acceleration/deceleration time, set the frequency change time from a stop status to Pr. 20. | |
| 21 F001 | Acceleration/deceleration time increments | 0 | | 0 | Increment: 0.1 s Range: 0 to 3600 s | Select the increment for the acceleration/ deceleration time setting and the setting range. |
| | | | | 1 | Increment: 0.01 s Range: 0 to 360 s | |
| 16 F002 | Jog acceleration/ deceleration time | 0.5 s | | 0 to 3600 s (360 s ①) | Set the acceleration/deceleration time for JOG operation (from stop status to Pr. 20). Refer to page 5-278 | |
| 611 F003 | Acceleration time at a restart | 5 s ② | | 0 to 3600 s, 9999 | Set the acceleration time for restart (from stop status to Pr. 20). When "9999" is set, standard acceleration time (like Pr. 7) is applied as the acceleration time at restart. Refer to page 5-540, page 5-549. | |
| | | 15 s ③ | | | | |
| 7 F010 | Acceleration time | 5 s ④ | | 0 to 3600 s (360 s ①) | Set the motor acceleration time (from stop status to Pr. 20). | |
| | | 15 s ⑤ | | | | |
| 8 F011 | Deceleration time | 5 s ④ | | 0 to 3600 s (360 s ①) | Set the motor deceleration time (from Pr. 20 to stop status). | |
| | | 15 s ⑤ | | | | |
| 44 F020 | Second acceleration/ deceleration time | 5 s | | 0 to 3600 s (360 s ①) | Set the acceleration/deceleration time when the RT signal is ON. | |

| Pr. | Name | Initial value | | Setting range | Description |
|---|---|---|---|---|---|
| | | FM | CA | | |
| 45<br>F021 | Second deceleration time | 9999 | | 0 to 3600 s (360 s ①) | Set the deceleration time when the RT signal is ON. |
| | | | | 9999 | Acceleration time = deceleration time |
| 147<br>F022 | Acceleration/deceleration time switching frequency | 9999 | | 0 to 590 Hz | Set the frequency where the acceleration/deceleration time switches to the time set in Pr. 44 and Pr. 45. |
| | | | | 9999 | No function |
| 110<br>F030 | Third acceleration/deceleration time | 9999 | | 0 to 3600 s (360 s ①) | Set the acceleration/deceleration time when X9 signal is ON. |
| | | | | 9999 | Third acceleration/deceleration is disabled. |
| 111<br>F031 | Third deceleration time | 9999 | | 0 to 3600 s (360 s ①) | Set the deceleration time when X9 signal is ON. |
| | | | | 9999 | Acceleration time = deceleration time |
| 791<br>F070 | Acceleration time in low-speed range | 9999 | | 0 to 3600 s (360 s ①) | Set the acceleration time in a low-speed range (less than 10% of the rated motor frequency). |
| | | | | 9999 | The acceleration time set in Pr. 7 is applied. (While RT signal or X9 signal is ON, the second or third function is enabled.) |
| 792<br>F071 | Deceleration time in low-speed range | 9999 | | 0 to 3600 s (360 s ①) | Set the deceleration time in a low-speed range (less than 10% of the rated motor frequency). |
| | | | | 9999 | The deceleration time set in Pr. 8 is applied. (While RT signal or X9 signal is ON, the second or third function is enabled.) |
| 1103<br>F040 | Deceleration time at emergency stop | 5 s | | 0 to 3600 s (360 s ①) | Set the motor deceleration time at a deceleration by turning ON the X92 signal. |

① Depends on the Pr. 21 "Acceleration/deceleration time increments" setting. The initial value for the setting range is "0 to 3600 s", and for the setting increment is "0.1 s".

② Initial value for the FR-A820-03160(55K) or lower and FR-A840-01800(55K) or lower.

③ Initial value for the FR-A820-03800(75K) or higher and FR-A840-02160(75K) and higher.

④ Initial value for the FR-A820-00490(7.5K) or lower and FR-A840-00250(7.5K) or lower.

⑤ Initial value for the FR-A820-00630(11K) or higher and FR-A840-00310(11K) and higher.

### Control block diagram

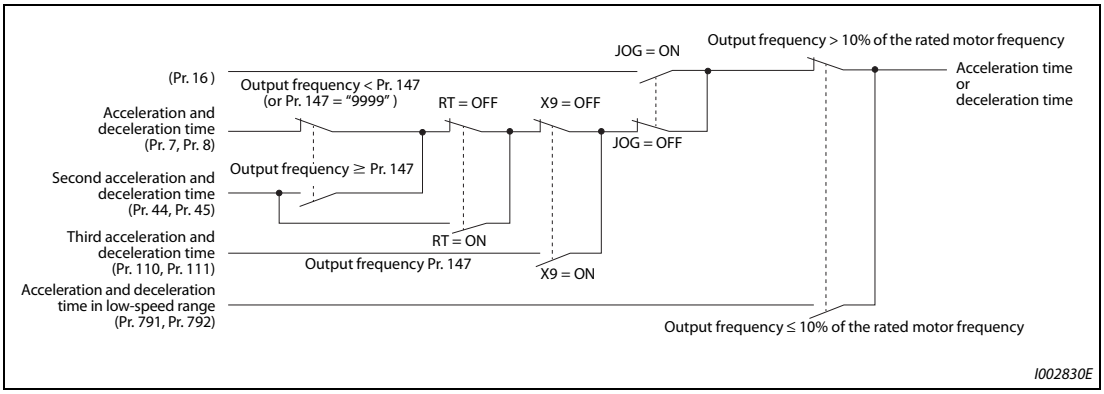


***Fig. 5-78:*** *Control block diagram*

### Acceleration time setting (Pr. 7, Pr. 20)

- Use Pr. 7 "Acceleration time" to set the acceleration time required to reach Pr. 20 "Acceleration/deceleration reference frequency" from stop status.
- Set the acceleration time according to the following formula.

$$\text{Acceleration time setting} = \frac{\text{Pr. 20} \times \text{Acceleration time from stop status to maximum frequency}}{(\text{Maximum frequency} - \text{Pr. 13})}$$

**Example** ▽

For example, the following calculation is performed to find the setting value for Pr. 7 when increasing the output frequency to the maximum frequency of 50 Hz in 10 s with Pr. 20 = "60 Hz (initial value)" and Pr. 13 = "0.5 Hz".
Pr. 7 = 60 Hz × 10 s / (50 Hz - 0.5 Hz)
≈ 12.1 s

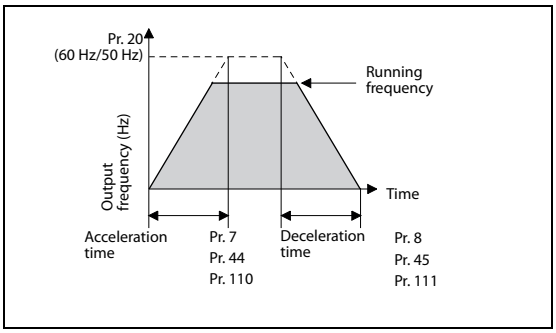


***Fig. 5-79:***
*Acceleration/deceleration time*

△

**Deceleration time setting (Pr. 8, Pr. 20)**

- Use Pr. 8 "Deceleration time" to set the deceleration time required to reach a stop status from to Pr. 20 "Acceleration/deceleration reference frequency".
- Set the deceleration time according to the following formula.

$$\text{Deceleration time setting} = \frac{\text{Pr. 20} \times \text{Deceleration time from maximum frequency to stop}}{(\text{Maximum frequency} - \text{Pr. 10})}$$

**Example** ▽

For example, the following calculation is used to find the setting value for Pr. 8 when increasing the output frequency to the maximum frequency of 50 Hz in 10 s with Pr. 20 = 120 Hz and Pr. 10 = 3 Hz.
Pr. 8 = 120 Hz × 10 s / (50 Hz - 3 Hz)
≈ 25.5 s

△

**NOTES**

If the acceleration/deceleration time is set, the actual motor acceleration/deceleration time cannot be made shorter than the shortest acceleration/deceleration time determined by the mechanical system J (moment of inertia) and motor torque.

If the Pr. 20 setting is changed, the Pr. 125 and Pr. 126 (frequency setting signal gain frequency) settings do not change. Set Pr. 125 and Pr. 126 to adjust the gains.

Under PM sensorless vector control, if the protective function (E.OLT) is activated due to insufficient torque in the low-speed range, set longer acceleration/deceleration times only in the low-speed range in Pr. 791 "Acceleration time in low-speed range" and Pr. 792 "Deceleration time in low-speed range".

**Changing the setting range and increments of the acceleration/deceleration time (Pr. 21)**

- Use Pr. 21 to set the acceleration/deceleration time and minimum setting range.
  - Setting value "0" (initial value): 0 to 3600 s (minimum setting increments 0.1 s)
  - Setting value "1": 0 to 360 s (minimum setting increments 0.01 s)

**NOTE**

Changing the Pr. 21 setting changes the acceleration/deceleration time setting (Pr. 7, Pr. 8, Pr. 16, Pr. 44, Pr. 45, Pr. 110, Pr. 111, Pr. 264, Pr. 265). (The Pr. 611 "Acceleration time at a restart" setting is not affected.)

**Setting multiple acceleration/deceleration times**
**(RT signal, X9 signal, Pr. 44, Pr. 45, Pr. 110, Pr. 111, Pr. 147)**

- Pr. 44 and Pr. 45 are valid when the RT signal is ON or when the output frequency is equal to or higher than the frequency set in Pr. 147 "Acceleration/deceleration time switching frequency". Pr. 110 and Pr. 111 are valid when the X9 signal is ON.
- Even at the frequency lower than the Pr. 147 setting, turning ON the RT signal (X9 signal) will switch the acceleration/deceleration time to the second (third) acceleration/deceleration time. The priority of the signals and settings is X9 signal > RT signal > Pr. 147 setting.
- To input the X9 signal, set "9" in any of Pr. 178 to Pr. 189 (input terminal function selection) to assign the function to the terminal.
- When "9999" is set in Pr. 45 and Pr. 111, the deceleration time becomes equal to the acceleration time (Pr. 44, Pr. 110).
- When Pr. 110 = "9999" is set, the third acceleration/deceleration function is disabled.
- If the Pr. 147 setting is equal to or less than the Pr. 10 "DC injection brake operation frequency" or the Pr. 13 "Starting frequency" setting, the acceleration/deceleration time switches to the Pr. 44 (Pr. 45) when the output frequency reaches or exceeds the Pr. 10 or Pr. 13 setting.

| Pr. 147 setting | Acceleration/deceleration time | Description |
|---|---|---|
| 9999 (initial value) | Pr. 7, Pr. 8 | Acceleration/deceleration time is not automatically changed. |
| 0.00 Hz | Pr. 44, Pr. 45 | Second acceleration/deceleration time is applied from the start. |
| 0.01 Hz ≤ Pr. 147 ≤ set frequency | Output frequency < Pr. 147: Pr. 7, Pr. 8<br>Pr. 147 ≤ output frequency: Pr. 44, Pr. 45 | Acceleration/deceleration time is automatically changed. |
| Set frequency < Pr. 147 | Pr. 7, Pr. 8 | Not changed as the frequency has not reached the switchover frequency. |

***Tab. 5-90:*** *Setting of Pr. 147*

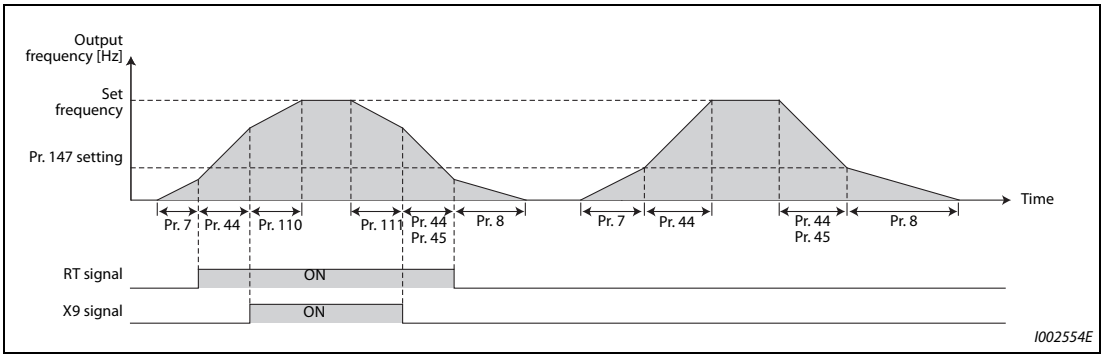


***Fig. 5-80:*** *Changing the acceleration/deceleration time by switching the signals RT and X9*

- Switching frequency for each control method

| Control method | Switching frequency |
|---|---|
| V/F control | Output frequency |
| Advanced magnetic flux vector control | Output frequency before the slip compensation. |
| Real sensorless vector control,<br>PM sensorless vector control | Estimated speed converted as frequency |
| Vector control<br>Encoder feedback control | Actual motor speed converted as frequency |

***Tab. 5-91:*** *Control method and switching frequency*

**NOTES**

The reference frequency during acceleration/deceleration depends on the Pr. 29 "Acceleration/deceleration pattern selection" setting. (Refer to page 5-232.)

The RT and X9 signals can be assigned to an input terminal by setting Pr. 178 to Pr. 189 (input terminal function selection). Changing the terminal assignment may affect other functions. Set parameters after confirming the function of each terminal.

The RT (X9) signal acts as the second (third) function selection signal and makes the other second (third) functions valid. (Refer to page 5-415.)

RT signal is assigned to the terminal RT in the initial status. Set "3" in any of Pr. 178 to Pr. 189 (input terminal function selection) to assign the RT signal to another terminal.

**Setting the acceleration/deceleration time in the low-speed range (Pr. 791, Pr. 792)**

If torque is required in the low-speed range (less than 10% of the rated motor frequency) under PM sensorless vector control, set the Pr. 791 "Acceleration time in low-speed range" and Pr. 792 "Deceleration time in low-speed range" settings higher than the Pr. 7 "Acceleration time" and Pr. 8 "Deceleration time" settings so that the mild acceleration/deceleration is performed in the low-speed range. Such a setting is especially effective when the low-speed range high-torque characteristic is disabled (Pr. 788="0"). (When RT signal or X9 signal is turned ON, the second or third acceleration/deceleration time setting is prioritized.)

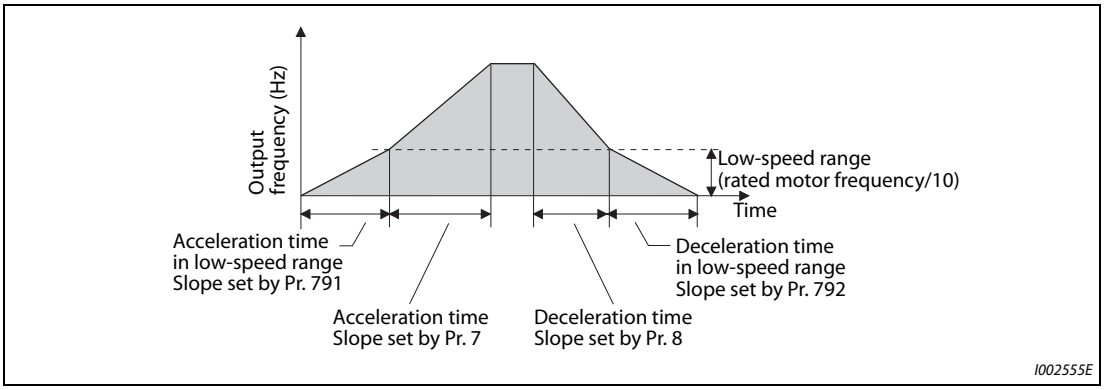


***Fig. 5-81:*** *Setting the acceleration/deceleration time in the low-speed range*

**NOTES**

Set Pr. 791 higher than Pr. 7, and Pr. 792 higher than Pr. 8. If set as Pr. 791 < Pr. 7, the operation is performed as Pr. 791 = Pr. 7. If set as Pr. 792 < Pr. 8, the operation is performed as Pr. 792 = Pr. 8.

Refer to page 8-8 for the rated motor frequency of MM-CF.

**Emergency stop function (Pr. 1103)**

- When the emergency stop (X92) signal is ON, the deceleration stop is performed according to the settings in the Pr. 1103 "Deceleration time at emergency stop" and Pr. 815 "Torque limit level 2".
- To input the X92 signal, set "92" in any of Pr. 178 to Pr. 189 (input terminal function selection) to assign the function to a terminal.
- The X92 signal is a normally closed input (NC contact input).
- [PS] is displayed on the operation panel during activation of the emergency stop function.

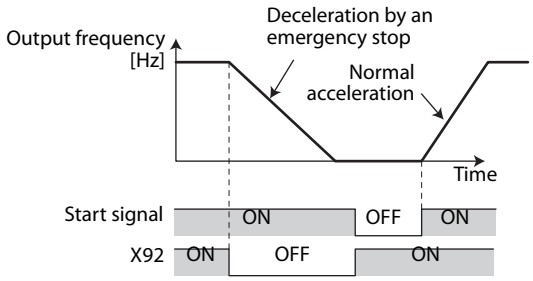


***Fig. 5-82:*** *Setting the acceleration/deceleration time in the low-speed range*

**NOTE**

The X92 signals can be assigned to an input terminal by setting Pr. 178 to Pr. 189 (input terminal function selection). Changing the terminal assignment may affect other functions. Set parameters after confirming the function of each terminal.

| Parameters referred to | | | |
|---|---|---|---|
| Pr. 3 | Base frequency | => | page 5-631 |
| Pr. 10 | DC injection brake operation frequency | => | page 5-640 |
| Pr. 29 | Acceleration/deceleration pattern selection | => | page 5-232 |
| Pr. 125, Pr. 126 | (frequency setting gain frequency) | => | page 5-388 |
| Pr. 178 to Pr. 182 | (input terminal function selection) | => | page 5-409 |
| Pr. 264 | Power-failure deceleration time 1 | => | page 5-558 |
| Pr. 265 | Power-failure deceleration time 2 | => | page 5-558 |

## 5.8.2 Acceleration/deceleration pattern

The acceleration/deceleration pattern can be set according to the application.

In addition, the backlash measures that stop acceleration/deceleration by the frequency or time set with parameters at acceleration/deceleration can be set.

| Pr. | Name | Initial value | Setting range | Description |
|---|---|---|---|---|
| 29<br>F100 | Acceleration/deceleration pattern selection | 0 | 0 | Linear acceleration/deceleration |
| | | | 1 | S-pattern acceleration/deceleration A |
| | | | 2 | S-pattern acceleration/deceleration B |
| | | | 3 | Backlash measures |
| | | | 4 | S-pattern acceleration/deceleration C |
| | | | 5 | S-pattern acceleration/deceleration D |
| | | | 6 | Variable-torque acceleration/ deceleration |
| 140<br>F200 | Backlash acceleration stopping frequency | 1 Hz | 0 to 590 Hz | Set the stopping frequency and time during backlash measures.<br>Valid by backlash measures (Pr. 29 = "3"). |
| 141<br>F201 | Backlash acceleration stopping time | 0.5 s | 0 to 360 s | |
| 142<br>F202 | Backlash deceleration stopping frequency | 1 Hz | 0 to 590 Hz | |
| 143<br>F203 | Backlash deceleration stopping time | 0.5 s | 0 to 360 s | |
| 380<br>F300 | Acceleration S-pattern 1 | 0 | 0 to 50% | Set the time for drawing the S-pattern from acceleration/deceleration start to linear acceleration as a ratio (%) of acceleration/deceleration time (Pr. 7, Pr. 8, etc.).<br>The acceleration/deceleration curve can be switched by the X20 signal.<br>Valid by S-pattern acceleration/ deceleration C (Pr. 29 = "4"). |
| 381<br>F301 | Deceleration S-pattern 1 | 0 | 0 to 50% | |
| 382<br>F302 | Acceleration S-pattern 2 | 0 | 0 to 50% | |
| 383<br>F303 | Deceleration S-pattern 2 | 0 | 0 to 50% | |
| 516<br>F400 | S-pattern time at a start of acceleration | 0.1 s | 0.1 to 2.5 s | Set the time required for acceleration (S-pattern) of S-pattern acceleration/ deceleration.<br>Valid by S-pattern acceleration/ deceleration D (Pr. 29 = "5"). |
| 517<br>F401 | S-pattern time at a completion of acceleration | 0.1 s | 0.1 to 2.5 s | |
| 518<br>F402 | S-pattern time at a start of deceleration | 0.1 s | 0.1 to 2.5 s | |
| 519<br>F403 | S-pattern time at a completion of deceleration | 0.1 s | 0.1 to 2.5 s | |

### Linear acceleration/deceleration (Pr. 29 = "0" initial value)

When the frequency is changed for acceleration, deceleration, etc. during inverter operation, the output frequency is changed linearly (linear acceleration/deceleration) to reach the set frequency without straining the motor and inverter. Linear acceleration/deceleration has a uniform frequency/time slope.

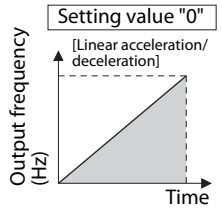


***Fig. 5-83:***
*Characteristic for parameter 29 = 0*

I002556E

**S-pattern acceleration/deceleration A (Pr. 29 = "1")**

- Use this when acceleration/deceleration is required for a short time until a high-speed area equal to or higher than the base frequency, such as for the main shaft of the machine.
- The acceleration/deceleration pattern has the Pr. 3 "Base frequency" (Pr. 84 "Rated motor frequency" under PM sensorless vector control) (fb) as the point of inflection in an S-pattern curve, and the acceleration/deceleration time can be set to be suitable for the motor torque reduction in the constant-power operation range at the base frequency (fb) or more.

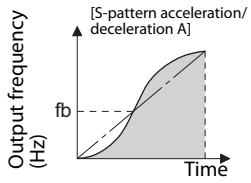


***Fig. 5-84:***
*Characteristic for parameter 29 = 1*

I002557E_B

- Acceleration/deceleration time calculation method when the set frequency is equal to or higher than the base frequency

  Acceleration time $t = (4/9) \times (T/fb^2) \times f^2 + (5/9) \times T$

  T: acceleration/deceleration time (s)
  f: set frequency (Hz)
  fb: base frequency (rated motor frequency)

- Reference (0 Hz to set frequency) of acceleration/deceleration time when Pr. 3 = "60 Hz"

| Acceleration/deceleration time (s) | Set frequency (Hz) | | | |
|---|---|---|---|---|
| | 60 | 120 | 200 | 400 |
| 5 | 5 | 12 | 27 | 102 |
| 15 | 15 | 35 | 82 | 305 |

***Tab. 5-92:*** *Acceleration/deceleration times when Pr. 3 = 60 Hz*

**NOTE**

For the acceleration/deceleration time setting of the S-pattern acceleration/deceleration A, set the time to Pr. 3 (Pr. 84 under PM sensorless vector control) instead of Pr. 20 "Acceleration/deceleration reference frequency".

**S-pattern acceleration/deceleration B (Pr. 29 = "2")**

- This is useful for preventing collapsing stacks such as on a conveyor. S-pattern acceleration/deceleration B can reduce the impact during acceleration/deceleration by accelerating/decelerating while maintaining an S-pattern from the present frequency (f2) to the target frequency (f1).

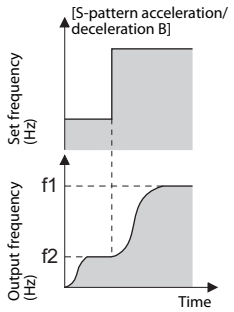


***Fig. 5-85:***
*Characteristic for parameter 29 = 2*

I002558E_B

**Backlash measures (Pr. 29 = "3", Pr. 140 to Pr. 143)**

- Reduction gears have an engagement gap and have a dead zone between forward rotation and reverse rotation. This dead zone is called backlash, and this gap disables a mechanical system from following motor rotation. More specifically, a motor shaft develops excessive torque when the direction of rotation changes or when constant-speed operation shifts to deceleration, resulting in a sudden motor current increase or regenerative status.
- To avoid backlash, acceleration/deceleration is temporarily stopped. Set the acceleration/deceleration stopping frequency and time in Pr. 140 to Pr. 143.

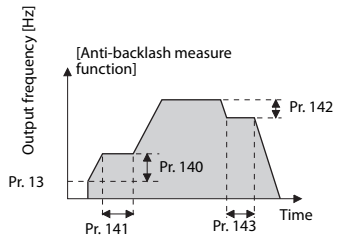


***Fig. 5-86:*** *Anti-backlash measure function*

I002559E_B

**NOTE** Setting the backlash measures increases the acceleration/deceleration time by the stopping time.

**S-pattern acceleration/deceleration C (Pr. 29 = "4", Pr. 380 to Pr. 383)**

- Switch the acceleration/deceleration curve by the S-pattern acceleration/deceleration C switchover (X20) signal.
- To input the X20 signal, set "20" in any of Pr. 178 to Pr. 189 (Input terminal function selection) to assign the function to the terminal.

| X20 signal | During acceleration | During deceleration |
|---|---|---|
| OFF | Pr. 380 "Acceleration S-pattern 1" | Pr. 381 "Deceleration S-pattern 1" |
| ON | Pr. 382 "Acceleration S-pattern 2" | Pr. 383 "Deceleration S-pattern 2" |

***Tab. 5-93:*** *Selection of acceleration/deceleration curve S-pattern 1 or S-pattern 2*

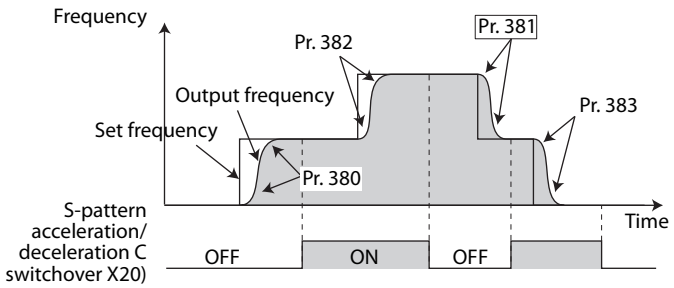


I001551E

***Fig. 5-87:*** *Characteristic for parameter 29 = 4*

- Set the ratio (%) of time for drawing an S-shape in Pr. 380 to Pr. 383 with the acceleration time as 100%.

  Parameter setting (%) = Ts / T × 100%

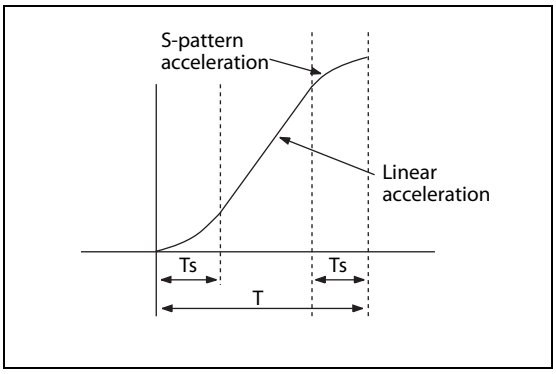


***Fig. 5-88:***
*Parameter setting*

I001552E

**NOTES**

At a start, the motor starts at Pr. 13 "Starting frequency" when the start signal turns ON.

If there is a difference between the speed command and speed at a start of deceleration due to torque limit operation etc., the speed command is matched with the speed to make deceleration.

Change the X20 signal after the speed becomes constant.

S pattern operation before switching continues even if the X20 signal is changed during acceleration or deceleration.

The X20 signal can be assigned to an input terminal by setting any of Pr. 178 to Pr. 189 (input terminal function selection). Changing the terminal assignment may affect other functions. Set parameters after confirming the function of each terminal.

**S-pattern acceleration/deceleration D (Pr. 29 = "5", Pr. 516 to Pr. 519)**

- Set the time required for S-pattern operation part of S-pattern acceleration/deceleration with Pr. 516 to Pr. 519.
  Set each S-pattern operation time for acceleration start (Pr. 516), acceleration completion (Pr. 517), deceleration start (Pr. 518), and deceleration completion (Pr. 519).
- When S-pattern acceleration/deceleration D is set, the acceleration/deceleration time becomes longer, as shown below. The set acceleration/deceleration time T1 indicates the actual time taken for linear acceleration/deceleration as calculated based on Pr. 7, Pr. 8, Pr. 44, Pr. 45, Pr. 110, and Pr. 111.

$$\text{Actual acceleration time T2} = \frac{\text{Set acceleration time T1} + (\text{S-pattern time at start of acceleration} + \text{S-pattern time at completion of acceleration})}{2}$$

$$\text{Actual deceleration time T2} = \frac{\text{Set deceleration time T1} + (\text{S-pattern time at start of deceleration} + \text{S-pattern time at completion of deceleration})}{2}$$

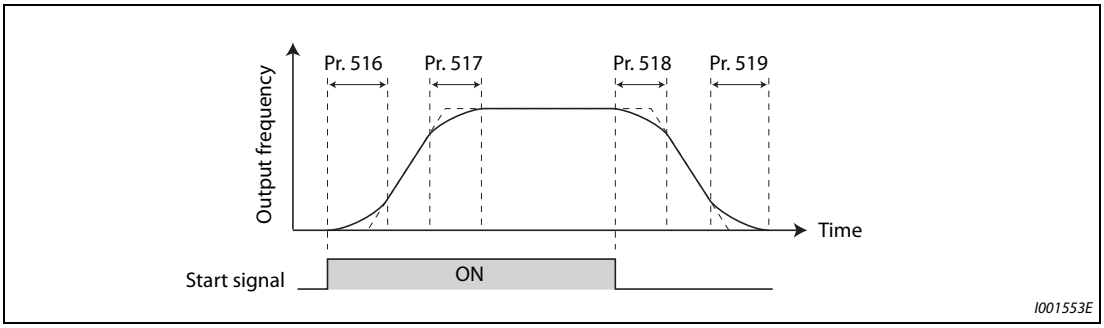


***Fig. 5-89:*** *Characteristic for parameter 29 = 5*

**NOTE**

Even if the start signal is turned OFF during acceleration, the inverter will not decelerate immediately to avoid sudden frequency change. (Likewise, the inverter will not immediately accelerate when deceleration is changed to re-acceleration by turning the start signal ON during deceleration, etc.)

**Example** ▽

The following table shows the actual acceleration time when starting the inverter by selecting S-pattern acceleration/deceleration D from a stop to 60 Hz, as shown below, with the initial parameter settings.

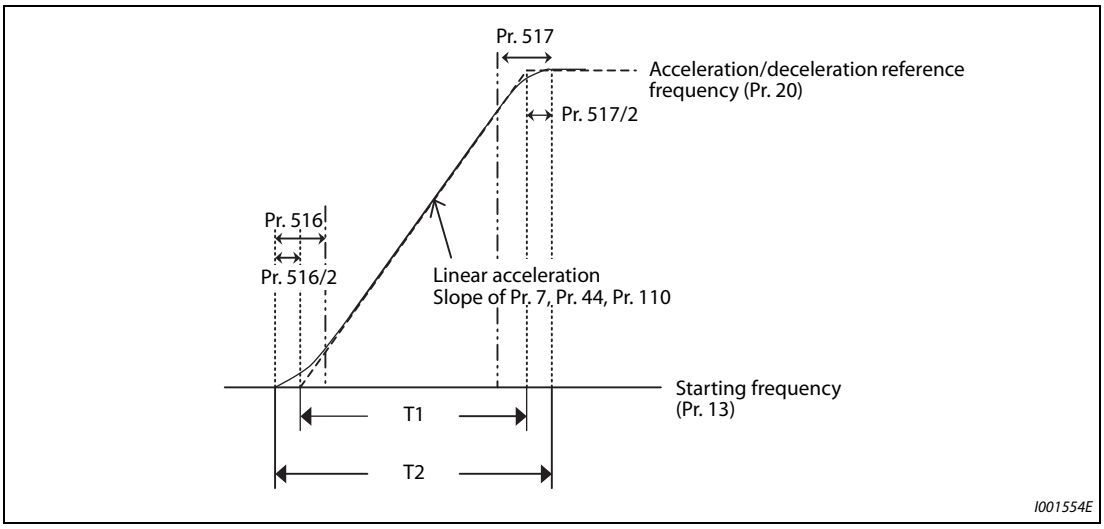


***Fig. 5-90:*** *Actual acceleration time when starting*

Set acceleration time T1 = (Set frequency – Pr. 13) × Pr. 7 / Pr. 20
= (60 Hz - 0.5 Hz) × 5 s / 60 Hz
= 4.96 s (actual acceleration time at linear acceleration)

Actual acceleration time T2 = Set acceleration time T1 + (Pr. 516 + Pr. 517) / 2
= 4.96 s + (0.1 s + 0.1 s) / 2
= 5.06 s (acceleration time at S-pattern acceleration)

△

- The following table shows the actual deceleration time when stopping the inverter by selecting S-pattern acceleration/deceleration D from operation to 0 Hz, as shown below, with the initial parameter settings.

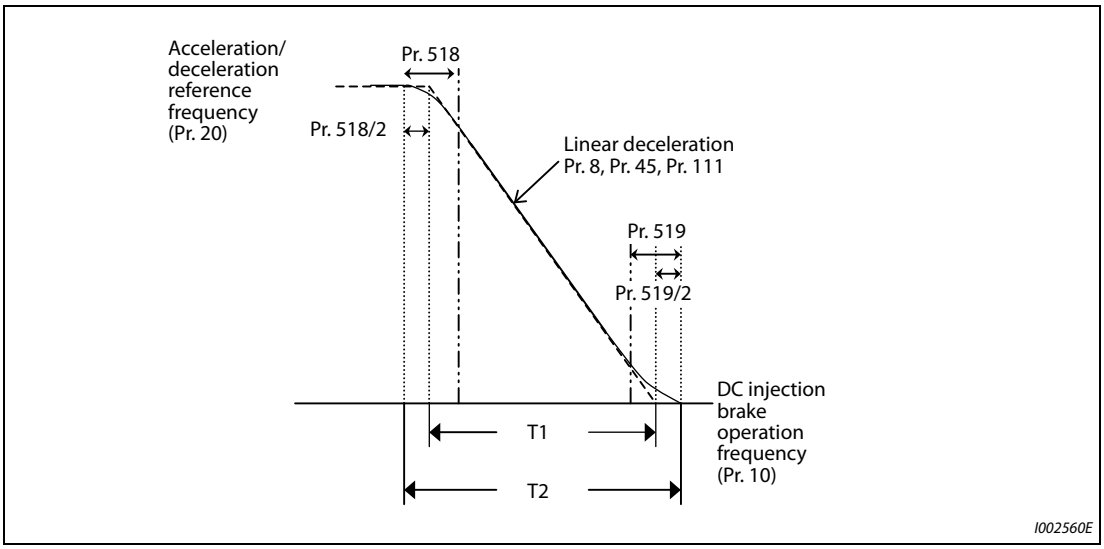


***Fig. 5-91:*** *Actual deceleration time when stopping*

| | | |
|---|---|---|
| Set deceleration time T1 | = | (Set frequency – Pr. 10) × Pr. 8 / Pr. 20 |
| | = | (60 Hz - 3 Hz) × 5 s / 60 Hz |
| | = | 4.75 s (actual deceleration time at linear deceleration) |
| Actual deceleration time T2 | = | Set deceleration time T1 + (Pr. 518 + Pr. 519) / 2 |
| | = | 4.75 s + (0.1 s + 0.1 s) / 2 |
| | = | 4.85 s (deceleration time at S-pattern deceleration) |

△

**NOTES**

When acceleration/deceleration time (such as Pr. 7 and Pr. 8) is set to "0 s" under Real sensorless vector control, vector control, and PM sensorless vector control (with MM-CF and Pr. 788 "Low speed range torque characteristic selection" = "9999 (initial value)"), linear acceleration and deceleration are performed for the S-pattern acceleration/deceleration A to D and backlash measures (Pr. 29 = "1 to 5").

Set linear acceleration/deceleration (Pr. 29 = "0 (initial value)") when torque control is performed under Real sensorless vector control or vector control. When acceleration/deceleration patterns other than the linear acceleration/deceleration are selected, the protective function of the inverter may be activated.

**Variable-torque acceleration/deceleration (Pr. 290 = "6")**

This function is suitable to accelerate/decelerate a variable torque load such as a fan and blower in a short time.
Linear acceleration/deceleration is performed in the area where the output frequency > base frequency.

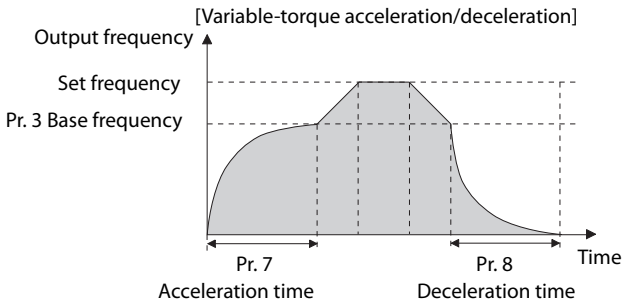


***Fig. 5-92:*** *Characteristic for parameter 29 = 6*

**NOTES**

When the base frequency is out of the range 45 to 65 Hz, the linear acceleration/deceleration is performed even if Pr. 29 = "6".

Even if Pr. 14 "Load pattern selection" = "1 (variable torque load)", variable torque acceleration/deceleration setting is prioritized and the inverter operates as Pr. 14 = "0 (constant torque load)".

For the variable torque acceleration/deceleration time setting, set the time period to reach Pr. 3 "Base frequency". (Not the time period to reach Pr. 20 "Acceleration/deceleration reference frequency".)

The variable torque acceleration/deceleration is disabled during PM sensorless vector control. (Linear acceleration/deceleration is performed.)

| Parameters referred to | | | |
|---|---|---|---|
| Pr. 3 | Base frequency | => | page 5-631 |
| Pr. 7 | Acceleration time | => | page 5-225 |
| Pr. 8 | Deceleration time | => | page 5-225 |
| Pr. 20 | Acceleration/deceleration reference frequency | => | page 5-225 |
| Pr. 10 | DC injection brake operation frequency | => | page 5-640 |
| Pr. 178 to Pr. 182 | (input terminal function selection) | => | page 5-409 |

## 5.8.3 Remote setting function

Even if the operation panel is located away from the enclosure, contact signals can be used to perform continuous variable-speed operation, without using analog signals.

By simply setting this parameter, the acceleration, deceleration and setting clear functions of the remote speed setter (FR-FK) become available.

| Pr. | Name | Initial value | Setting range | Description | | |
|---|---|---|---|---|---|---|
| | | | | RH, RM, RL signal function | Frequency setting storage function | Deceleration to the frequency lower than the set frequency |
| 59<br>F101 | Restart cushion time | 0 | 0 | Multi-speed setting | – | Disabled |
| | | | 1 | Remote setting | With | |
| | | | 2 | Remote setting | Without | |
| | | | 3 | Remote setting | Without (Turning STF/STR OFF clears remotely-set frequency.) | |
| | | | 11 | Remote setting | With | Enabled |
| | | | 12 | Remote setting | Without | |
| | | | 13 | Remote setting | Without (Turning STF/STR OFF clears remotely-set frequency.) | |

**Remote setting function**

- Use Pr. 59 to enable/disable the remote setting function and enable/disable the frequency setting storage function during remote setting.
- When Pr. 59 ≠ "0" (remote setting function valid), the functions of the RH, RM and RL signals are changed to acceleration (RH), deceleration (RM) and clear (RL).

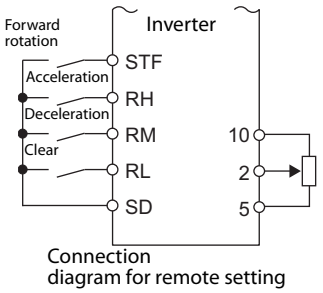


***Fig. 5-93:***
*Connection diagram for remote setting*

I002562E

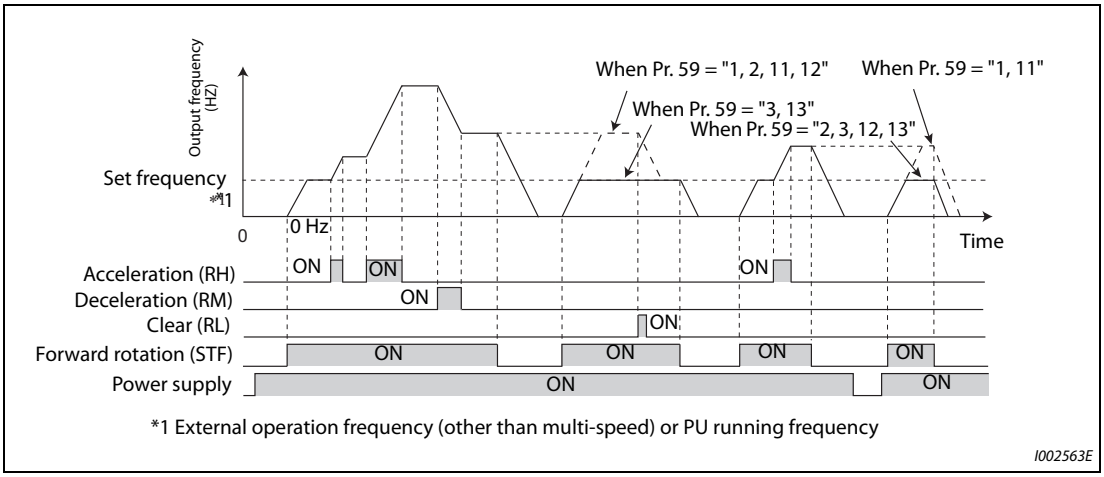


***Fig. 5-94:*** *Example of the remote setting function*

**Acceleration/deceleration operation**

- When the acceleration signal (RH) is turned ON, the set frequency increases. The increased speed at this time is determined by the setting of Pr. 44 "Second acceleration/deceleration time". Turning OFF the RH signal will stop increasing the set frequency and run the motor at the frequency at that time.
- When the deceleration signal (RM) is turned ON, the set frequency decreases. The decreased speed at this time is determined by the setting of Pr. 45 "Second deceleration time". When Pr. 45 = "9999", the deceleration speed is the same as Pr. 44 setting. Turning OFF the RM signal will stop decreasing the set frequency and runs the motor at the frequency at that time.
- When Pr. 59 = any of "11, 12 or 13", deceleration can be performed to a frequency equal to or lower than the main speed (External operation mode frequency except multi-speed or PU operation mode frequency).

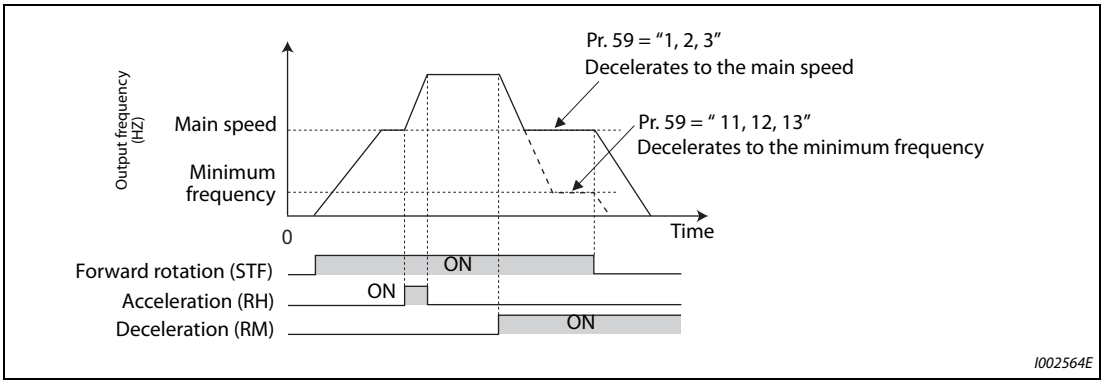


***Fig. 5-95:*** *Acceleration/deceleration operation*

**NOTE**

While the RT signal is OFF, Pr. 44 "Second acceleration/deceleration time" and Pr. 45 "Second deceleration time" are used as the set frequency accelerating/decelerating time at turn ON of the acceleration/deceleration signal. If the Pr. 7 and Pr. 8 settings are longer, the acceleration/deceleration time set by Pr. 7 and Pr. 8 are applied.
While the RT signal is ON, Pr. 44 and Pr. 45 settings are used as the acceleration/deceleration time regardless of the Pr. 7 and Pr. 8 settings.

**Output frequency**

- During External operation, the remotely-set frequency set with RH and RM signals is added to the terminal 4 input and External operation mode frequency (PU operation mode frequency when Pr. 79 = "3" (External and PU combined operation)) except multi-speed setting. (When compensating analog input, set Pr. 28 "Multi-speed input compensation selection" = "1". If the RH and RM signals are used for acceleration/deceleration while the frequency is set by analog voltage input (terminal 2 or 4, selected by Pr. 28 = "0"), the auxiliary input via the terminal 1 is disabled.)
- During PU operation, the remotely-set frequency set with RH and RM signal operation is added to the PU running frequency.

**Frequency setting storage**

- When Pr. 59 = "1, 11", the remotely-set frequency (frequency set by RH/RM operation) is stored to the memory (EEPROM). When power is switched OFF once, then ON, operation is resumed with the stored set frequency.
- When Pr. 59 = "2, 3, 12, 13", the set frequency is not stored, so when switching the power ON again after being switched OFF, the remotely-set frequency becomes 0 Hz.
- The remotely-set frequency is stored at the point when the start signal (STF or STR) turns OFF. Remotely-set frequency is stored every minute after turning OFF (ON) the RH and RM signals together. Each minute, the frequency is overwritten in the EEPROM if the latest frequency is different from the previous one when comparing the two. This cannot be written with RL signals.

**NOTE**

When switching the start signal from ON to OFF, or changing frequency by the RH or RM signal frequently, set the frequency setting value storage function (write to EEPROM) invalid (Pr. 59 = "2, 3, 12, 13"). If the frequency setting value storage function is valid (Pr. 59 = "1, 11"), the frequency is written to EEPROM frequently, and this will shorten the life of the EEPROM.

**Clearing the settings**

When Pr. 59 = "1, 2, 11, 12" and the clear signal (RL) is turned ON, the remotely-set frequency is cleared. When Pr. 59 = "3, 13" and the STF (STR) signal is turned OFF, the remotely-set frequency is cleared.

**NOTES**

The range of frequency changeable by acceleration signal (RH) and deceleration signal (RM) is 0 to maximum frequency (Pr. 1 or Pr. 18 setting). Note that the maximum value of set frequency is (main speed + maximum frequency).

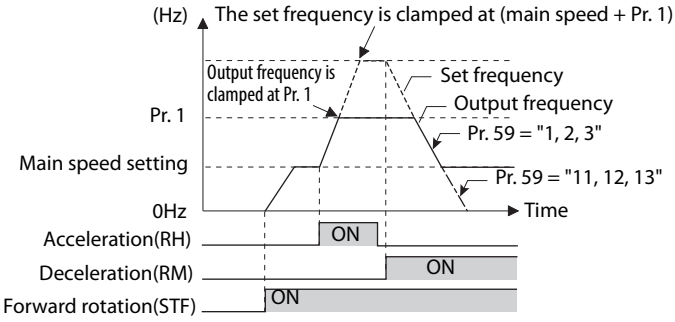


Even if the start signal (STF or STR) is OFF, turning ON the RH or RM signal varies the preset frequency.

The RH, RM, or RL signal can be assigned to an input terminal by setting Pr. 178 to Pr. 189 (input terminal function selection).
Changing the terminal assignment may affect other functions. Set parameters after confirming the function of each terminal.

The inverter can be used in the Network operation mode.

The remote setting function is invalid during JOG operation and PID control operation.

The multi-speed operation function is invalid when remote setting function is selected.

Setting frequency is "0".

Even when the remotely-set frequency is cleared by turning ON the RL (clear) signal after turning OFF (ON) both the RH and RM signals, the inverter operates at the remotely-set frequency stored in the last operation if power is reapplied before one minute has elapsed since turning OFF (ON) both the RH and RM signals.

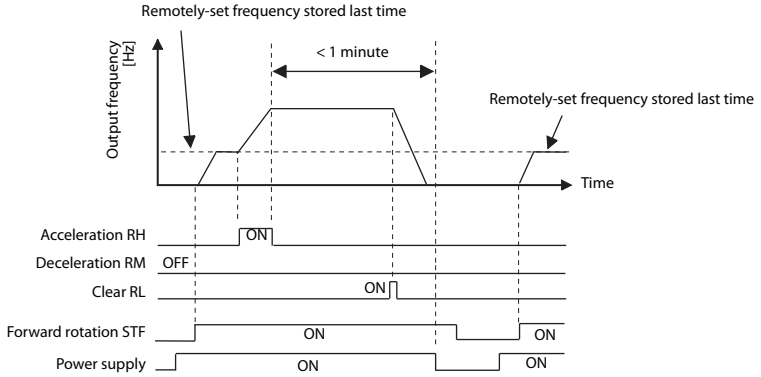


When the remotely-set frequency is cleared by turning ON the RL (clear) signal after turning OFF (ON) both the RH and RM signals, the inverter operates at the frequency in the remotely-set frequency cleared state if power is reapplied before one minute has elapsed since turning OFF (ON) both the RH and RM signals.

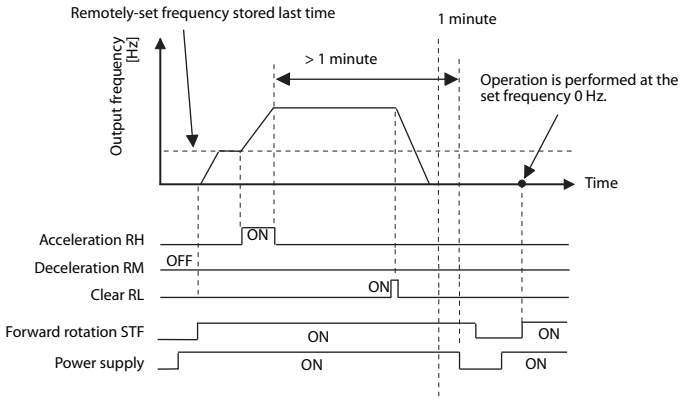


**CAUTION:**

***When using the remote setting function, set the maximum frequency again according to the machine.***

| Parameters referred to | | | |
|---|---|---|---|
| Pr. 1 | Maximum frequency | => | page 5-300 |
| Pr. 18 | High speed maximum frequency | => | page 5-300 |
| Pr. 7 | Acceleration time | => | page 5-225 |
| Pr. 8 | Deceleration time | => | page 5-225 |
| Pr. 44 | Second acceleration/deceleration time | => | page 5-225 |
| Pr. 45 | Second deceleration time | => | page 5-225 |
| Pr. 28 | Multi-speed input compensation selection | => | page 5-182 |
| Pr. 178 to Pr. 182 | (input terminal function selection) | => | page 5-409 |

## 5.8.4 Starting frequency and start-time hold function V/F Magnetic flux Sensorless Vector

It is possible to set the starting frequency and hold the set starting frequency for a certain period of time.

Set these functions when a starting torque is needed or the motor drive at start needs smoothing.

| Pr. | Name | Initial value | Setting range | Description |
|---|---|---|---|---|
| 13<br>F102 | Starting frequency | 0.5 Hz | 0 to 60 Hz | Set the starting frequency at which the start signal is turned ON. |
| 571<br>F103 | Holding time at a start | 9999 | 0 to 10 s | Set the holding time of Pr. 13. |
| | | | 9999 | The holding function at a start is invalid. |

### Starting frequency setting (Pr. 13)

- The frequency at start can be set in the range of 0 to 60 Hz.
- Set the starting frequency at which the start signal is turned ON.

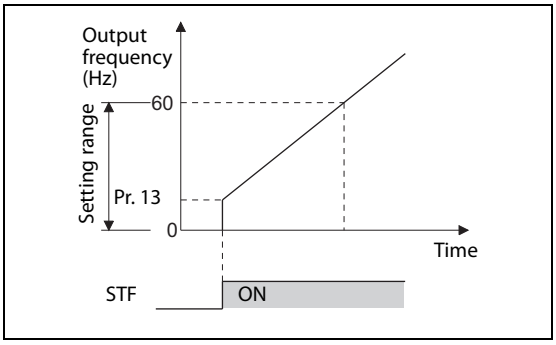


***Fig. 5-96:***
*Starting frequency parameter*

I002566E

**NOTE**

The inverter does not start if the frequency setting signal is less than the value set in Pr. 13.
For example, while Pr. 13 = 5 Hz, the inverter output starts when the frequency setting signal reaches 5 Hz.

### Start-time hold function (Pr. 571)

- This function holds during the period set in Pr. 571 and the output frequency set in Pr. 13 "Starting frequency".
- This function performs initial excitation to smooth the motor drive at a start.

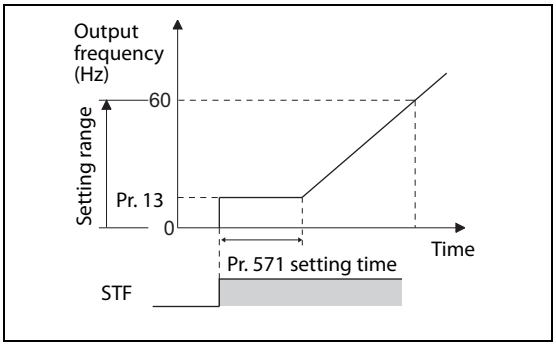


***Fig. 5-97:***
*Holding time at start*

I002567E

**NOTES**

When Pr. 13 = "0 Hz", the starting frequency is held at 0.01 Hz.

When the start signal was turned OFF during start-time hold, deceleration is started at that point.

At switching between forward rotation and reverse rotation, the starting frequency is valid but the start-time hold function is invalid.

**CAUTION:**

***Note that when Pr. 13 is set to any value equal to or lower than Pr. 2 "Minimum frequency", simply turning ON the start signal will run the motor at the preset frequency even if the command frequency is not input.***

| Parameters referred to | | | |
|---|---|---|---|
| Pr. 2 | Minimum frequency | => | page 5-300 |

## 5.8.5 Minimum motor speed frequency and hold function at motor start up PM

Set the frequency where the PM motor starts running.

Set the deadband in the low-speed range to eliminate noise and offset deviation when setting a frequency with analog input.

| Pr. | Name | Initial value | Setting range | Description |
|---|---|---|---|---|
| 13<br>F102 | Starting frequency | Minimum frequency/ Minimum rotations per minute | 0 to 60 Hz | Set the frequency where the motor starts running. |
| 571<br>F103 | Holding time at a start | 9999 | 0 to 10 s | Set the time to hold 0.01 Hz. |
| | | | 9999 | The holding function at start is disabled. |

**Starting frequency setting (Pr. 13)**

- The frequency where the PM motor starts running can be set in the range of 0 to 60 Hz.
- While the frequency command is less than the Pr. 13 "Starting frequency" setting, the PM motor is stopped.
  When the frequency command reaches the set frequency or higher, the PM motor accelerates according to the Pr. 7 "Acceleration time" setting.

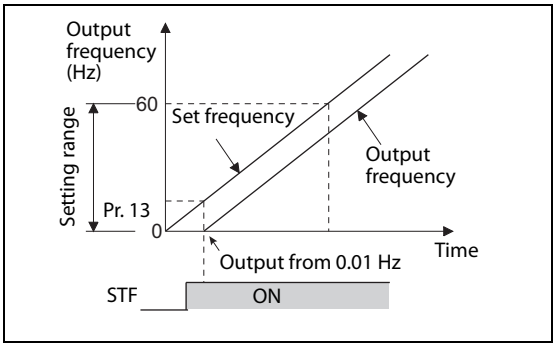


***Fig. 5-98:***
*Starting frequency parameter*

**NOTES**

Under induction motor control (under V/F control, Advanced magnetic flux vector control, Real sensorless vector control, and vector control), the output starts at the frequency set in Pr. 13. Under PM sensorless vector control, the output always starts at 0.01 Hz.

The inverter output does not start when the frequency-setting signal is less than Pr. 13. For example, while Pr. 13 = "20 Hz", the inverter output starts when the frequency setting signal reaches 20 Hz.

**Start-time hold function (Pr. 571)**

- This function holds 0.01 Hz during the period set in Pr. 571.
- Pr. 71 is active when the low-speed range high-torque characteristic is enabled (Pr. 788 = "9999").

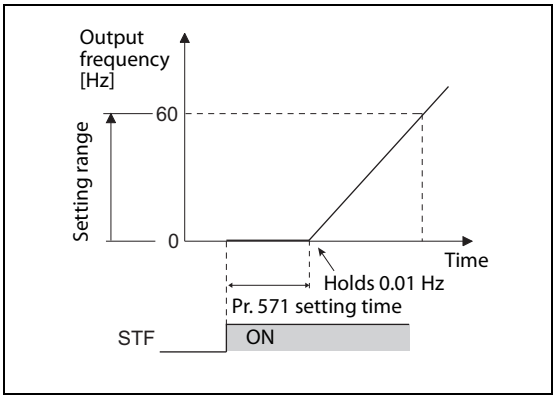


***Fig. 5-99:***
*Function of start-time hold function*

**CAUTION:**

***Note that when Pr. 13 is set to any value equal to or lower than Pr. 2 "Minimum frequency", simply turning ON the start signal will run the motor at the preset frequency even if the command frequency is not input.***

| Parameters referred to | | | |
|---|---|---|---|
| Pr. 2 | Minimum frequency | => | page 5-300 |
| Pr. 7 | Acceleration time | => | page 5-225 |

## 5.8.6 Shortest acceleration/deceleration and optimum acceleration/deceleration (automatic acceleration/deceleration) V/F Magnetic flux Sensorless Vector

The inverter can be operated with the same conditions as when the appropriate value is set to each parameter even when acceleration/deceleration time and V/F pattern are not set. This function is useful for operating the inverter without setting detailed parameters.

| Pr. | Name | Initial value | Setting range | Description |
|---|---|---|---|---|
| 292<br>F500 | Automatic acceleration/ deceleration | 0 | 0 | Normal operation |
| | | | 1 | Shortest acceleration/deceleration (without brakes) |
| | | | 11 | Shortest acceleration/deceleration (with brakes) |
| | | | 3 | Optimum acceleration/deceleration |
| | | | 5, 6 | Lift operation 1, 2<br>(Refer to page 5-252.) |
| | | | 7, 8 | Brake sequence 1, 2 (Refer to page 5-469.) |
| 61<br>F510 | Reference current | 9999 | 0 to 500 A ① | Set the reference current during shortest (optimum) acceleration/deceleration. |
| | | | 0 to 3600 A ② | |
| | | | 9999 | Rated output current value reference of the inverter |
| 62<br>F511 | Reference value at acceleration | 9999 | 0 to 220% | Set the speed limit value (optimum value) during shortest (optimum) acceleration. |
| | | | 9999 | Shortest acceleration/deceleration: 150% as the limit value<br>Optimum acceleration/deceleration: 100% as the optimum value |
| 63<br>F512 | Reference value at deceleration | 9999 | 0 to 220% | Set the speed limit value (optimum value) during shortest (optimum) deceleration. |
| | | | 9999 | Shortest acceleration/deceleration: 150% as the limit value<br>Optimum acceleration/deceleration: 100% as the optimum value |
| 293<br>F513 | Acceleration/deceleration separate selection | 0 | 0 | Shortest (optimum) acceleration/ deceleration for both acceleration and deceleration |
| | | | 1 | Shortest (optimum) acceleration/ deceleration for acceleration only |
| | | | 2 | Shortest (optimum) acceleration/ deceleration for deceleration only |

① The setting range for the FR-A820-03160(55K) or lower and FR-A840-01800(55K) or lower.

② The setting range for the FR-A820-03800(75K) or higher and FR-A840-02160(75K) or higher.

**Shortest acceleration/deceleration (Pr. 292 = "1, 11", Pr. 293)**

- Set this parameter to accelerate/decelerate the motor at the shortest time. This function is useful when the motor needs to be accelerated/decelerated at a shorter time, such as for a machine, but the designed value of the machine constant is not known.
- This function adjusts the acceleration/deceleration time to accelerate/decelerate the motor with the maximum torque that can be output with the inverter. Pr. 7 "Acceleration time" and Pr. 8 "Deceleration time" settings are used as reference, and their settings are not changed.
- Use Pr. 293 "Acceleration/deceleration separate selection" to apply the shortest acceleration/deceleration to one of acceleration and deceleration only.
  When "0 (initial value)" is set, the shortest acceleration/deceleration is performed for both acceleration and deceleration.
- Since the FR-A820-00490(7.5K) or lower, FR-A840-00250(7.5K) or lower capacity inverters are equipped with built-in brake resistors, set Pr. 292 to "11". Set "11" also when a high-duty brake resistor or brake unit is connected. The deceleration time can further be shortened.
- When the shortest acceleration/deceleration is selected under V/F control and Advanced magnetic flux vector control, the stall prevention operation level during acceleration/deceleration becomes 150% (adjustable using Pr. 61 to Pr. 63). The setting of Pr. 22 "Stall prevention operation level" and stall level by analog input are used only during a constant speed operation.
  Under Real sensorless vector control and vector control, the torque limit level (Pr. 22, etc.) is applied during acceleration/deceleration. The adjustments by Pr. 61 to Pr. 63 are disabled.
- It is inappropriate to use for the following applications.
  - Machines with large inertia (10 times or more), such as a fan. Since stall prevention operation will be activated for a long time, this type of machine may trip due to motor overloading, etc.
  - When the inverter is always operated at a specified acceleration/deceleration time.

**NOTES**

Even if automatic acceleration/deceleration has been selected, inputting the JOG signal (JOG operation), RT signal (second function selection) or X9 signal (third function selection) during an inverter stop will switch to the normal operation and give priority to JOG
operation, second function selection or third function selection. Note that during operation, an input of JOG and RT signal does not have any influence even when the automatic acceleration/deceleration is enabled.

Since the shortest acceleration/deceleration is made with the stall prevention operation being activated, the acceleration/deceleration speed always varies according to the load conditions.

By setting Pr. 7 and Pr. 8 appropriately, it is possible to accelerate/decelerate with a shorter time than when selecting the shortest acceleration/deceleration.

**Optimum acceleration/deceleration (Pr. 292 = "3", Pr. 293)**

- The inverter operates at the most efficient level within the rated range that can be used continuously with reasonable inverter capacity.
  Using self-learning, the average current during acceleration/deceleration is automatically set so as to become the rated current.
  This is ideal for applications operated with a predetermined pattern and minimal load fluctuations, such as by an automatically operated conveyor.
- When the optimum acceleration/deceleration is selected, at first, the operation is performed with the values set in Pr. 0 "Torque boost", Pr. 7 "Acceleration time", and Pr. 8 "Deceleration time". After the first operation is completed, average and peak currents are calculated based on the motor current during acceleration/deceleration, and the obtained values are compared with the reference current (initially set to the rated inverter current) to adjust the Pr. 0, Pr. 7, and Pr. 8 settings to their optimal values.
  The operation is the performed with the updated Pr. 0, Pr. 7, and Pr. 8 values onwards, and those parameters settings are adjusted each time.
  Under Advanced magnetic flux vector control, Real sensorless vector control and vector control, however, the Pr. 0 setting is not changed.
- When a Regenerative overvoltage trip during deceleration or stop (E.OV3) occurs during deceleration, the setting of Pr. 8 is multiplied by 1.4.
- Parameter storage
  The optimum values of Pr. 0, Pr. 7 and Pr. 8 are written to both the parameter RAM and EEPROM only three times of acceleration (deceleration) after the optimum acceleration/deceleration has been selected or after the power is switched ON or the inverter is reset. At or after the fourth attempt, they are not stored into EEPROM. Hence, after power-ON or inverter reset, the values changed at the third time are valid. However, the optimum values are calculated even for the fourth time and later, and Pr. 0, Pr. 7, and Pr. 8 are set to the RAM; therefore, these can be stored to the EEPROM by reading and writing the settings with the operation panel (FR-DU08).

| Number of optimum value changes | Pr. 0, Pr. 7, Pr. 8 | | Operating condition |
|---|---|---|---|
| | EEPROM value | RAM value | |
| 1 to 3 times | Updated | Updated | Updated |
| 4 and more times | Unchanged from the 3rd value | Updated | Updated |

***Tab. 5-94:*** *Storage of optimum values*

- Either acceleration or deceleration can be made in the optimum acceleration/deceleration using Pr. 293 "Acceleration/deceleration separate selection". When the setting value is "0" (initial value), both acceleration and deceleration are made in the optimum acceleration/deceleration.
- It is inappropriate for machines which change in load and operation conditions.
  Optimum values are saved for the next operation. If the operating condition changes before the next operation, a fault such as overcurrent trip or a lack of acceleration/deceleration may occur.

**NOTES**

Even if the optimum acceleration/deceleration has been selected, inputting the JOG signal (Jog operation), RT signal (second function selection) or X9 signal (third function selection) during an inverter stop will switch to the normal operation and give priority to JOG operation, second function selection or third function selection. Note that during operation, an input of JOG and RT signal does not have any influence even when the optimum acceleration/deceleration is enabled.

Because of the learning method, the impact of the optimum acceleration/deceleration is not apparent in the first operation after setting to the optimum acceleration/deceleration mode.

The optimum value are calculated for only acceleration from 0 to 30 Hz or higher or deceleration from 30 Hz or higher to 0 Hz.

The optimum acceleration/deceleration will not operate if the motor was not connected or the output current is less than 5% of the rated current of the inverter.

A Regenerative overvoltage trip during deceleration or stop (E.OV3) may occur during deceleration even if the optimum acceleration/deceleration is selected with Pr. 293 ="1 (optimum acceleration/deceleration during acceleration only)" setting. In such case, set Pr. 8 setting longer.

**Shortest and optimum acceleration/deceleration adjustment (Pr. 61 to Pr. 63)**

The application range can be expanded by setting the parameters for adjustment of Pr. 61 to Pr. 3.

| Pr. | Name | Setting range | Description |
|---|---|---|---|
| 61 | Reference current | 0 to 500 A ① | Set the rated motor current value such as when the motor capacity and inverter capacity differ.<br>Shortest acceleration/deceleration: Set the reference current (A) of the stall prevention operation level during acceleration/deceleration.<br>Optimum acceleration/deceleration: Set the reference current (A) of the optimum current during acceleration/deceleration. |
| | | 0 to 3600 A ② | |
| | | 9999 (initial value) | The rated inverter current value is the reference. |
| 62 | Reference value at acceleration<br><br>Reference value at deceleration | 0 to 400% | Set this when changing the reference level of acceleration and deceleration.<br>Shortest acceleration/deceleration: Set the stall prevention operation level (percentage of current value of Pr. 61) during acceleration/deceleration.<br>Optimum acceleration/deceleration: Set the optimum current level (percentage of current value of Pr. 61) during acceleration/deceleration. |
| 63 | | 9999 (initial value) | Shortest acceleration/deceleration: Stall prevention operation level is 150% for the shortest acceleration/deceleration.<br>Optimum acceleration/deceleration: 100% as the optimum value. |

① The setting range for the FR-A820-03160(55K) or lower and FR-A840-01800(55K) or lower.

② The setting range for the FR-A820-03800(75K) or higher and FR-A840-02160(75K) or higher.

**NOTES**

When Real sensorless vector control or vector control is selected with the shortest acceleration/deceleration, Pr. 61 to Pr. 63 are invalid.

Even if Pr. 61 to Pr. 63 are set once, changing the setting to other than the shortest acceleration/deceleration (Pr. 292 ≠ "1 or 11") automatically resets them to the initial setting (9999). Set Pr. 61 to Pr. 63 after setting Pr. 292.

| Parameters referred to | | | |
|---|---|---|---|
| Pr. 0 | Torque boost | => | page 5-629 |
| Pr. 7 | Acceleration time | => | page 5-225 |
| Pr. 8 | Deceleration time | => | page 5-225 |
| Pr. 22 | Stall prevention operation level | => | page 5-83 |
| Pr. 22 | Torque limit level | => | page 5-83 |

## 5.8.7 Lift operation (automatic acceleration/deceleration) V/F

The inverter can be operated according to the load pattern of the lift with counterweight.

| Pr. | Name | Initial value | Setting range | Description | |
|---|---|---|---|---|---|
| 292<br>F500 | Automatic acceleration/ deceleration | 0 | 0 | Normal operation | |
| | | | 1 | Shortest acceleration/ deceleration (without brakes) | (Refer to page 5-247.) |
| | | | 11 | Shortest acceleration/ deceleration (with brakes) | |
| | | | 3 | Optimum acceleration/ deceleration | |
| | | | 5 | Lift operation 1 (stall prevention operation level 150%) | |
| | | | 6 | Lift operation 2 (stall prevention operation level 180%) | |
| | | | 7, 8 | Brake sequence 1, 2 (Refer to page 5-469.) | |
| 61<br>F510 | Reference current | 9999 | 0 to 500 A ① | Set the reference current during shortest (optimum) acceleration/deceleration. | |
| | | | 0 to 3600 A ② | | |
| | | | 9999 | Rated output current value reference of the inverter | |
| 64<br>F520 | Starting frequency for elevator mode | 9999 | 0 to 10 Hz | Set the starting frequency for the lift operation. | |
| | | | 9999 | Starting frequency is 2 Hz. | |

① The setting range for the FR-A820-03160(55K) or lower and FR-A840-01800(55K) or lower.

② The setting range for the FR-A820-03800(75K) or higher and FR-A840-02160(75K) or higher.

**Lift operation (Pr. 292 = "5, 6")**

- When Pr. 292 "Automatic acceleration/deceleration" is set to "5" or "6", the lift operation is selected, and each setting is changed, as shown in the table below.
- During power driving, sufficient torque is generated, and during regenerative driving and during driving with no load, the torque boost setting is adjusted automatically so as not to activate the overcurrent protective function by overexcitation.

| Name | Normal operation | Multi-rating (Pr. 570) | Lift operation (Pr. 292) | |
|---|---|---|---|---|
| | | | 5 | 6 |
| Torque boost | Pr. 0 (6/4/3/2/1%) | | Changes according to the output current (as shown below) | |
| Starting frequency | Pr. 13 (0.5 Hz) | | Pr. 64 (2 Hz) Accelerate after 100 ms hold. | |
| Base frequency voltage | Pr. 19 (9999) | | 220 V class (440 V class) | |
| Stall prevention operation level | Pr. 22 (150%), etc. | 0(SLD) | 110% | 115% |
| | | 1(LD) | 120% | 140% |
| | | 2(ND) Initial value | 150% | 180% |
| | | 3(HD) | 200% | 230% |

***Tab. 5-95:*** *Valid values in the elevator mode*

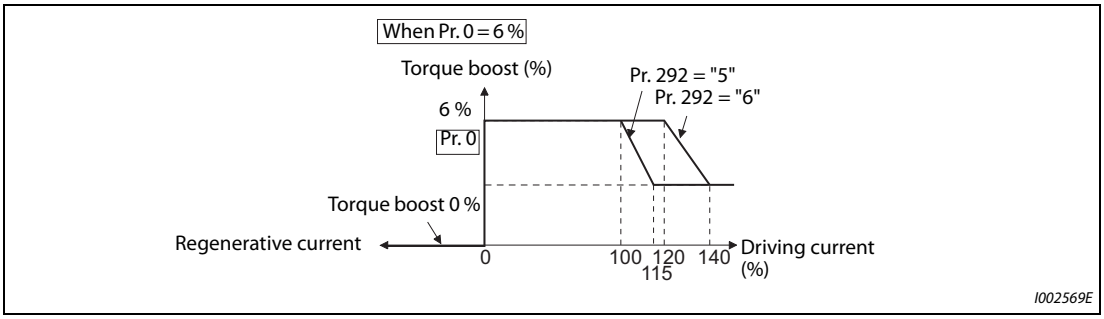


***Fig. 5-100:*** *Torque boost in dependence of the output current*

- If the lift has a load in which the rated current of the inverter is exceeded, the maximum torque may be insufficient.
  For a lift without counterweight, setting Pr. 14 "Load pattern selection" to "2 or 3" (for lift load) and setting Pr. 19 "Base frequency voltage" appropriately give the maximum torque a greater advantage than when selecting the lift operation.

**NOTE**

The stall prevention operation level is automatically lowered according to the cumulative value of the electronic thermal O/L relay so as to prevent an inverter overload trip (E.THT, E.THM) from occurring.

**Lift operation adjustment (Pr. 61, Pr. 64)**

The application range can be expanded by setting the parameters for adjustment of Pr. 61 and Pr. 64.

| Pr. | Name | Setting range | Description |
|---|---|---|---|
| 61 | Reference current | 0 to 500 A ① | Set the rated motor current value when the motor capacity and inverter capacity differ, etc. Set the reference current (A) of the stall prevention operation level. |
| | | 0 to 3600 A ② | |
| | | 9999 (initial value) | The rated inverter output current value is the reference. |
| 64 | Starting frequency for elevator mode | 0 to 10 Hz | Set the starting frequency for the lift operation. |
| | | 9999 (initial value) | Starting frequency is 2 Hz. |

① The setting range for the FR-A820-03160(55K) or lower and FR-A840-01800(55K) or lower.

② The setting range for the FR-A820-03800(75K) or higher and FR-A840-02160(75K) or higher.

**NOTES**

Even if the lift operation has been selected, inputting the JOG signal (Jog operation), RT signal (second function selection) or X9 signal (third function selection) during an inverter stop will disable the automatic acceleration/deceleration and give priority to JOG operation, second function selection or third function selection. Note that during operation, an input of JOG and RT signal does not have any influence even when the automatic acceleration/deceleration is enabled.

Even if Pr. 61 and Pr. 64 are set, changing Pr. 292 automatically resets to the initial setting (9999). Set Pr. 61 and Pr. 64 after setting Pr. 292.

| Parameters referred to | | | |
|---|---|---|---|
| Pr. 0 | Torque boost | => | page 5-629 |
| Pr. 13 | Starting frequency | => | page 5-243 |
| Pr. 14 | Load pattern selection | => | page 5-634 |
| Pr. 19 | Base frequency voltage | => | page 5-631 |
| Pr. 2 | Stall prevention operation level | => | page 5-83 |
| Pr. 570 | Multiple rating setting | => | page 5-193 |

# 5.9 (D) Operation command and frequency command

| Purpose | Parameter to set | | | Refer to page |
|---|---|---|---|---|
| To select the operation mode | Operation mode selection | P.D000 | Pr. 79 | 5-255 |
| To start up in Network operation mode at power-ON | Communication startup mode selection | P.D000, P.D001 | Pr. 79, Pr. 340 | 5-264 |
| To select the command source during communication operation | Operation and speed command sources during communication operation, command source selection | P.D010 to P.D013 | Pr. 338, Pr. 339, Pr. 550, Pr. 551 | 5-266 |
| To prevent motor from rotating reversely | Reverse rotation prevention selection | P.D020 | Pr. 78 | 5-273 |
| To change the setting resolution of speed | Set resolution switchover | P.D030 | Pr. 811 | 5-314 |
| To change the setting resolution of torque limit | Set resolution switchover | P.D030 | Pr. 811 | 5-314 |
| To set the frequency by pulse train input | Pulse train input | P.D100, P.D101, P.D110, P.D111 | Pr. 291, Pr. 384 to Pr. 386 | 5-274 |
| To perform JOG operation | JOG operation | P.D200, P.F002 | Pr. 15, Pr. 16 | 5-278 |
| To control frequency with combinations of terminals | Multi-speed operation | P.D300 to P.D315 | Pr. 28, Pr. 4 to Pr. 6, Pr. 24 to Pr. 27, Pr. 232 to Pr. 239 | 5-280 |
| To select torque command method during torque control | Torque command source selection | P.D400 to P.D402 | Pr. 804 to Pr. 806 | 5-129 |

## 5.9.1 Operation mode selection

Select the operation mode of the inverter.

The mode can be changed among operations using external signals (External operation), operation by operation panel (FR-DU08) or parameter unit (FR-PU07) (PU operation), combined operation of PU operation and External operation (External/PU combined operation), and Network operation (when RS-485 terminals or communication option is used).

| Pr. | Name | Initial value | Setting range | Description |
|---|---|---|---|---|
| 79<br>D000 | Operation mode selection | 0 | 0 to 4, 6, 7 | Selects the operation mode. |

The following table lists valid and invalid commands in each operation mode.

| Pr. 79 setting | Description | | | LED display<br>:OFF<br>:ON | Refer to page |
|---|---|---|---|---|---|
| 0<br>(initial value) | Use the External/PU switchover mode (PU/EXT key) to switch between the PU and External operation mode.<br>At power ON, the inverter is in the External operation mode. | | | PU operation mode<br>PU EXT NET<br>External operation mode<br>PU EXT NET<br>NET operation mode<br>PU EXT NET | 5-258 |
| 1 | **Operation mode** | **Frequency command** | **Start command** | PU operation mode<br>PU EXT NET | 5-259 |
| | PU operation mode fixed | Operation panel (FR-DU08) and PU (FR-PU04/FR-PU07). | FWD or REV key on PU (FR-DU08/FR-PU07) | | |
| 2 | External operation mode fixed.<br>The operation can be performed by switching between the External and NET operation modes. | External signal input (terminal 2 and 4, JOG, multi-speed selection, etc.) | External signal input (terminal STF, STR) | External operation mode<br>PU EXT NET<br>NET operation mode<br>PU EXT NET | 5-258 |
| 3 | External/PU combined operation mode 1 | PU (FR-DU08/FR-PU07) or external signal input (multi-speed setting, terminal 4) ① | External signal input (terminal STF, STR) | External/PU combined operation mode<br>PU EXT NET | 5-259 |
| 4 | External/PU combined operation mode 2 | External signal input (terminal 2 and 4, JOG, multi-speed selection, etc.) | FWD or REV key on PU (FR-DU08/FR-PU07) | | 5-260 |
| 6 | Switchover mode<br>Switching of PU, External, and NET operation modes can be performed during operation. | | | PU operation mode<br>PU EXT NET<br>External operation mode<br>PU EXT NET<br>NET operation mode<br>PU EXT NET | 5-260 |
| 7 | External operation mode (PU operation interlock)<br>X12 signal ON: Switchover to PU operation mode enabled (during External operation, output shutoff)<br>X12 signal OFF: Switchover to PU operation mode disabled | | | | 5-260 |

***Tab. 5-96:*** *Settings of Pr. 79*

① The priority of frequency commands when Pr. 79 = "3" is "multi-speed operation (RL/RM/RH/REX) > PID control (X14) > terminal 4 analog input (AU) > digital input by operation panel".

**Operation mode basics**

- The operation mode specifies the source of the start command and the frequency command for the inverter.
- Basically, there are following operation modes.
  **External operation mode**: For inputting a start command and a frequency command with an external potentiometer and switches which are connected to the control circuit terminal.
  **PU operation mode**: For inputting a start command and a frequency command with the operation panel (FR-DU08), parameter unit (FR-PU07), or the RS-485 communication via PU connector.
  **Network operation mode (NET operation mode)**: For inputting a start command and a frequency command using the RS-485 terminals or communication option.
- The operation mode can be selected from the operation panel or with the communication instruction code.

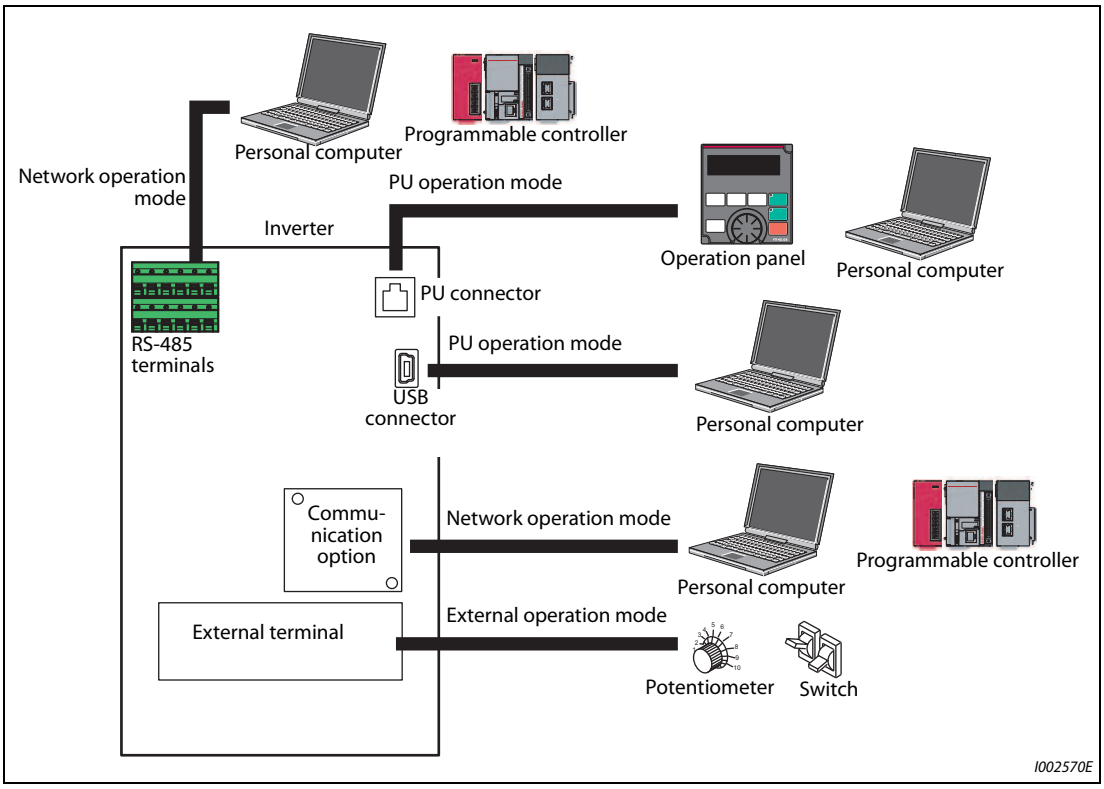


***Fig. 5-101:*** *Operation modes of the inverter*

**NOTES**

There are two settings of "3" and "4" with PU/External combined operation. The startup method differs according to the setting value.

In the initial setting, the stop function (PU stop selection) by PU (FR-DU08/FR-PU07) STOP RESET is effective in modes other than the PU operation mode. (Refer to Pr. 75 "Reset selection/disconnected PU detection/PU stop selection" on page 5-184.)

### Operation mode switching method

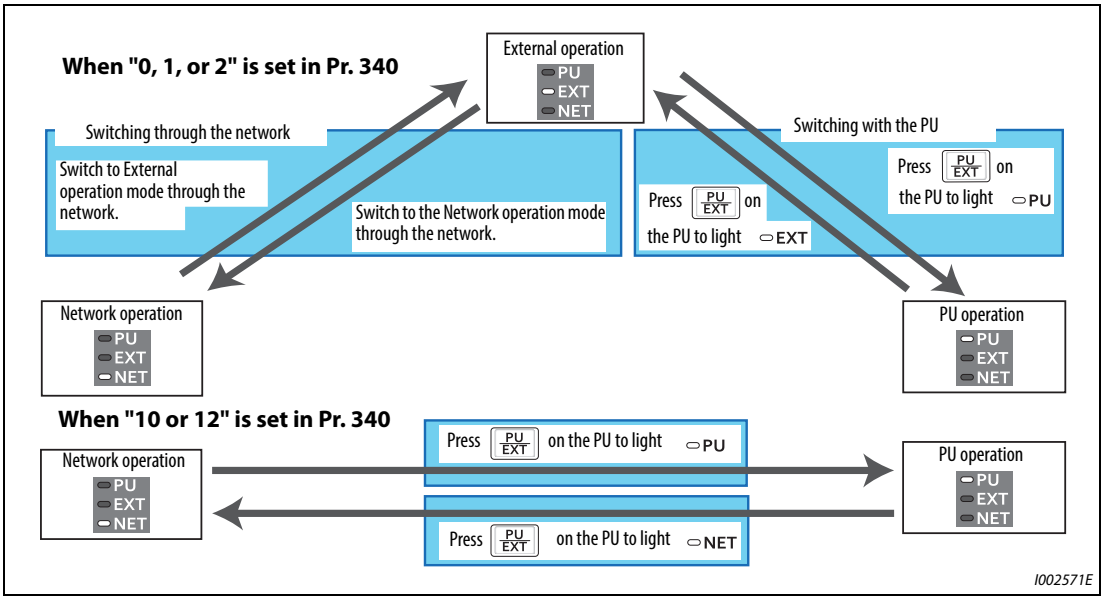


***Fig. 5-102:*** *Switching the operation mode*

**NOTE**

For details on switching by external terminals, refer to the following pages.
PU operation external interlock signal (X12) => page 5-260
PU-External operation switchover signal (X16) => page 5-262
External-NET operation switchover signal (X65), NET-PU operation switchover signal (X66) => page 5-262
Pr. 340 "Communication startup mode selection" => page 5-264

### Operation mode selection flow

Referring to the following table, select the basic parameter settings or terminal wiring related to the operation mode.

| Start command input method | Frequency setting method | Terminal wiring | Parameter setting | Operation method |
|---|---|---|---|---|
| External signal input (terminal STF, STR) | External (terminal 2 and 4, JOG, multi-speed, etc.) | STF (forward rotation)/ STR (reverse rotation) (Refer to page 5-417.) Terminal 2 and 4 (analog) RL, RM, RH, JOG, etc. | Pr. 79 = "2" (External operation mode fixed) | • Frequency setting Frequency setting terminal ON • Start command STF(STR)-ON |
| | PU (digital setting) | STF (forward rotation)/ STR (reverse rotation) (Refer to page 5-417.) | Pr. 79 = "3" (External/PU combined operation 1) | • Frequency setting DU digital setting • Start command STF(STR)-ON |
| | Communication (RS-485 terminals) | STF (forward rotation)/ STR (reverse rotation) (Refer to page 5-417.) RS-485 terminals (Refer to page 5-579.) | Pr. 338 = "1" Pr. 340 = "1, 2" | • Frequency setting Transmit a frequency command via communication. • Start command STF(STR)-ON |
| | Communication (communication option) | Terminals for communication option (Refer to the Instruction Manual of the communication option.) | Pr. 338 = "1" Pr. 340 = "1" | • Frequency setting Transmit a frequency command via communication. • Start command STF(STR)-ON |

***Tab. 5-97:*** *Flowchart for selecting the operation mode (1)*

| Start command input method | Frequency setting method | Terminal wiring | Parameter setting | Operation method |
|---|---|---|---|---|
| PU (FWD/REV key) | External (terminal 2 and 4, JOG, multi-speed, etc.) | Terminal 2 and 4 (analog) RL, RM, RH, JOG, etc. | Pr. 79 = "4" (External/PU combined operation 2) | • Frequency setting Frequency setting terminal ON<br>• Start command FWD/REV key ON |
| | PU (digital setting) | — | Pr. 79 = "1" (PU operation mode fixed) | • Frequency setting Digital setting<br>• Start command FWD/REV key ON |
| | Communication (RS-485 terminals/ communication option) | N/A | | |
| Communication (RS-485 terminals) | External (terminal 2 and 4, JOG, multi-speed, etc.) | RS-485 terminals (Refer to page 5-579.) Terminal 2 and 4 (analog) RL, RM, RH, JOG, etc. | Pr. 339 = "1" Pr. 340 = "1, 2" | • Frequency setting Frequency setting terminal ON<br>• Start command Transmit a start command via communication |
| | PU (digital setting) | N/A | | |
| | Communication RS-485 terminals | RS-485 terminals (Refer to page 5-579.) | Pr. 340 = "1, 2" | • Frequency setting Transmit a frequency command via communication.<br>• Start command Transmit a start command via communication |
| Communication (Communication option) | External (terminal 2 and 4, JOG, multi-speed, etc.) | Terminals for communication option (Refer to the Instruction Manual of the communication option.) Terminal 2 and 4 (analog) RL, RM, RH, JOG, etc. | Pr. 339 = "1" Pr. 340 = "1" | • Frequency setting Frequency setting terminal ON<br>• Start command Transmit a start command via communication |
| | PU (digital setting) | N/A | | |
| | Communication (communication option) | Terminals for communication option (Refer to the Instruction Manual of the communication option.) | Pr. 340 = "1" | • Frequency setting Transmit a frequency command via communication.<br>• Start command Transmit a start command via communication |

***Tab. 5-97:*** *Flowchart for selecting the operation mode (2)*

**External operation mode (Pr. 79 = "0" (initial value), "2")**

- Select the External operation mode when the start command and the frequency command are applied from a frequency setting potentiometer, start switch, etc. which are provided externally and connected to the control circuit terminals of the inverter.
- Generally, parameter change cannot be performed from the operation panel in the External operation mode. (Some parameters can be changed. Refer to Pr. 77 "Parameter write selection" page 5-195.)
- When Pr. 79 = "0 or 2", the inverter starts up in the External operation mode at power-ON. (When using the Network operation mode, refer to page 5-264.)
- When parameter changing is seldom necessary, setting "2" fixes the operation mode to the External operation mode.
  When frequent parameter changing is necessary, setting "0" (initial value) allows the operation mode to be changed easily to the PU operation mode by pressing the PU/EXT key of the operation panel. After switching to the PU operation mode, always return to the External operation mode.
- The STF and STR signal are used as a start command, and the voltage to terminal 2 and 4, current signal, multi-speed signal, and JOG signal are used as a frequency command.

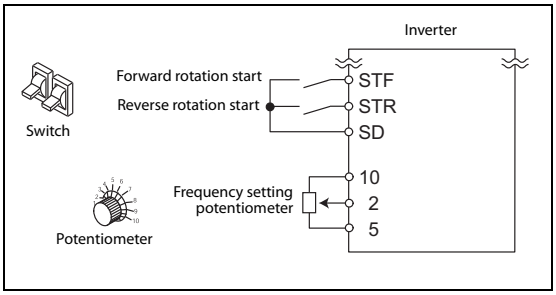


***Fig. 5-103:***
*External operation mode*

**PU operation mode (Pr. 79 = "1")**

- Select the PU operation mode when applying start and frequency commands by only the key operation of the operation panel (FR-DU08) and parameter unit (FR-PU07). Also select the PU operation mode when making communication using the PU connector.
- When Pr. 79 = "1", the inverter starts up in the PU operation mode at power-ON. The mode cannot be changed to other operation modes.
- The setting dial of the operation panel can be used for setting like a potentiometer. (Pr. 161 "Frequency setting/key lock operation selection" page 5-190)
- When the PU operation mode is selected, the PU operation mode signal (PU) can be output. For the terminal used for the PU signal, set "10 (positive logic)" or "110 (negative logic)" in any of Pr. 190 to Pr. 196 (output terminal function selection) to assign the function.

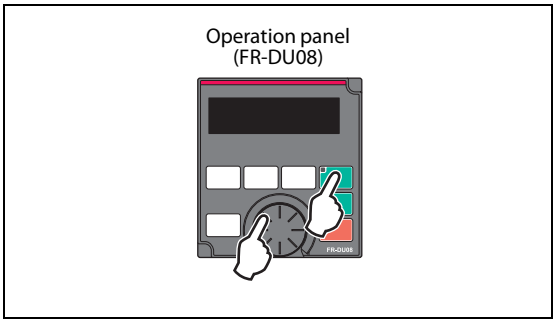


***Fig. 5-104:***
*PU operation mode*

**PU/External combined operation mode 1 (Pr. 79 = "3")**

- Select the PU/External combined operation mode 1 when applying a frequency command from the operation panel (FR-DU08) or parameter unit (FR-PU07) and inputting a start command with the external start switches.
- Set "3" in Pr. 79. The mode cannot be changed to other operation modes.
- When a frequency is input from the external signal by multi-speed setting, it has a higher priority than the frequency command from the PU. Also, when AU is set to "ON", the command signal is output to the terminal 4.

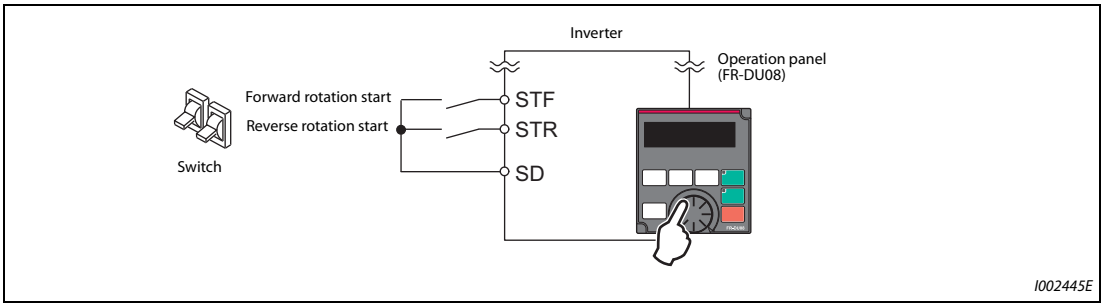


***Fig. 5-105:*** *Combined operation mode 1*

### PU/External combined operation mode 2 (Pr. 79 = "4")

- Select the PU/External combined operation mode 2 when applying a frequency command from the external potentiometer, or multi-speed and JOG signals, and inputting a start command by key operation of the operation panel (FR-DU08) or parameter unit (FR-PU07).
- Set "4" in Pr. 79. The mode cannot be changed to other operation modes.

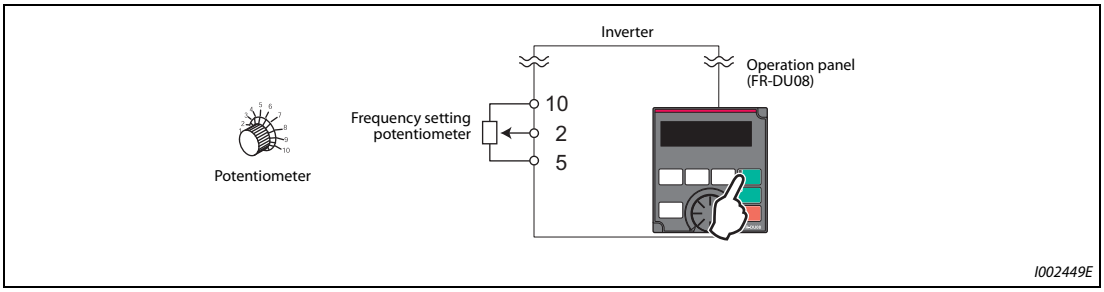


***Fig. 5-106:*** *Combined operation mode 2*

### Switchover mode (Pr. 79 = "6")

PU, External and Network operation (when RS-485 terminals or communication option is used) can be switched among during operation.

| Operation mode switchover | Operation switchover/Operating status |
|---|---|
| External operation<br>➔ PU operation | Set to the PU operation mode on the operation panel and parameter unit.<br>• As the direction of rotation, the direction that was active by External operation is continued.<br>• For the setting frequency, the setting of the potentiometer (frequency command) is continued. (Note, however, that the setting disappears when the power is turned OFF or when the inverter is reset.) |
| External operation<br>➔ NET operation | The switchover command to the Network operation mode is transmitted via communication.<br>• As the direction of rotation, the direction that was active by External operation is continued.<br>• The setting by the setting potentiometer (frequency command) is kept. (Note, however, that the setting disappears when the power is turned OFF or when the inverter is reset.) |
| PU operation<br>➔ External operation | Press the External operation key on the operation panel and parameter unit.<br>• The direction of operation is determined by the External operation input signal.<br>• The setting frequency is determined by the external frequency command signal. |
| PU operation<br>➔ NET operation | The switchover command to the Network operation mode is transmitted via communication.<br>• For the direction of operation and setting frequency, the status during PU operation is continued. |
| NET operation<br>➔ External operation | The switchover command to the External operation mode is transmitted via communication.<br>• The direction of operation is determined by the External operation input signal.<br>• The setting frequency is determined by the external frequency command signal. |
| NET operation<br>➔ PU operation | Switch to the PU operation mode on the operation panel and parameter unit.<br>• For the direction of operation and frequency, the status during Network operation is continued. |

***Tab. 5-98:*** *Operation states in the switch-over mode*

### PU operation interlock (Pr. 79 = "7")

- The operation mode can be forcibly switched to the External operation mode by input of the PU operation interlock (X12) signal. This function prevents the operation mode from being accidentally unswitched from the PU operation mode. If the operation mode left unswitched from the PU operation mode, the inverter does not reply to the commands sent through external commands.
- Set Pr. 79 = "7" (PU operation interlock).
- To input the X12 signal, set "12" in any of Pr. 178 to Pr. 189 (input terminal function selection) to assign the function to a terminal. (For details on Pr. 178 to Pr. 189, refer to page 5-409.)

- If the X12 signal is not assigned, the function of the MRS signal is switched to PU operation internal signal from MRS (output stop).

| X12 (MRS) signal | Function/Operation | |
|---|---|---|
| | **Operation mode** | **Parameter writing** ① |
| ON | Switching of the operation mode (External, PU, and NET) is enabled.<br>Output is stopped during External operation. | Parameter writing enabled |
| OFF | Operation mode is forcefully changed to the External operation mode.<br>External operation is enabled.<br>Switching to the PU or NET operation mode from the External operation mode is disabled. | Writing of parameters other than Pr. 79 is disabled. |

***Tab. 5-99:*** *Function of the X12 signal*

① Depends on the Pr. 77 "Parameter write selection" setting and the writing conditions of each parameter. (Refer to page 5-195.)

- Functions/operations by X12 (MRS) signal ON/OFF

| Operating status | | X12 (MRS) signal | Operation mode | Operating status | Switching to PU or NET operation mode |
|---|---|---|---|---|---|
| **Operation mode** | **Status** | | | | |
| PU/NET | during a stop | ON → OFF ① | External ② | If frequency and start commands are input from external source, the inverter runs by those commands. | Not available |
| | Running | ON → OFF ① | | | Not available |
| External | during a stop | OFF → ON | External ② | during a stop | Available |
| | | ON → OFF | | | Not available |
| | Running | OFF → ON | | Running → Output shutoff | Not available |
| | | ON → OFF | | Output shutoff → Running | Not available |

***Tab. 5-100:*** *Switching the X12 (MRS) signal*

① The mode is switched to the External operation mode regardless of the ON/OFF state of the start signals (STF, STR). Thus, the motor runs under the External operation mode when the X12 (MRS) signal turns OFF with either of STF or STR in an ON state.

② When a fault occurs, the inverter can be reset by pressing the STOP/RESET key on the operation panel.

**NOTES**

The operation mode cannot switched to the PU operation mode with the start signal (STF, STR) in an ON state even if the X12 (MRS) signal is ON.

If the MRS signal is ON and Pr. 79 is written to a value other than "7" when the MRS signal is used as the PU interlock signal during PU operation mode, the MRS signal will act as a regular MRS function (output stop). Also, when Pr. 79 = "7", the MRS signal becomes the PU interlock signal.

The logic of the signal follows the Pr. 17 "MRS input selection" setting also when the MRS signal is used as the PU operation interlock signal. When Pr. 17 = "2", ON and OFF in the above explanation are reversed.

Changing the terminal assignment using Pr. 178 to Pr. 189 (input terminal function selection) may affect the other functions. Set parameters after confirming the function of each terminal.

**Switching operation mode by external signal (X16 signal)**

- When External operation and the operation from the operation panel are used together, the PU operation mode and External operation mode can be switched during a stop (during motor stop, start command OFF) by using the PU-External operation switchover signal (X16).
- When Pr. 79 = "0", "6" or "7", switching between the PU operation mode and External operation mode is possible. (When Pr. 79 = "6", the switchover can also be made during operation.)
- To input the X16 signal, set "16" in any of Pr. 178 to Pr. 189 (input terminal function selection) to assign the function to a terminal.

| Pr. 79 setting | | X16 signal status and operation mode | | REMARKS |
|---|---|---|---|---|
| | | ON (External) | OFF (PU) | |
| 0 (initial value) | | External operation mode | PU operation mode | Switching among the External, PU, and NET operation modes is enabled. |
| 1 | | PU operation mode | | PU operation mode fixed |
| 2 | | External operation mode | | External operation mode fixed. (Switching to NET operation mode is enabled.) |
| 3, 4 | | External/PU combined operation mode | | External/PU combined operation mode fixed |
| 6 | | External operation mode | PU operation mode | Switching among the External, PU, and NET operation mode is enabled while running. |
| 7 | X12 (MRS) ON | External operation mode | PU operation mode | Switching among the External, PU, and NET operation mode is enabled. (In the External operation mode, output shutoff.) |
| | X12 (MRS) OFF | External operation mode | | External operation mode fixed. (Forcibly switched to External operation mode.) |

***Tab. 5-101:*** *Operation mode switching by signal X16*

**NOTES**

The status of the operation mode follows the Pr. 340 "Communication startup mode selection" setting and the ON/OFF state of the X65 and X66 signals. (For details, refer to page 5-262.)

The priority among Pr. 79 and Pr. 340 and signals is Pr. 79 > X12 > X66 > X65 > X16 > Pr. 340.

Changing the terminal assignment using Pr. 178 to Pr. 189 (input terminal function selection) may affect the other functions. Set parameters after confirming the function of each terminal.

**Switching the operation mode by external signals (X65, X66 signals)**

- When Pr. 79 = "0, 2 or 6", the PU operation mode and External operation mode can be changed to the Network operation mode during a stop (during motor stop, start command OFF) by the PU/NET operation switchover (X65) signal, the External/NET operation switchover (X66) signal. (When Pr. 79 = "6", switchover is enabled during operation.)
- To switch between the Network operation mode and the PU operation mode

  ① Set Pr. 79 = "0 (initial value) or 6".

  ② Set Pr. 340 "Communication startup mode selection" = "10 or 12".

  ③ Set "65" in any of Pr. 178 to Pr. 189 to assign the NET-PU operation switching signal(X65) to a terminal.

  ④ When the X65 signal is ON, the PU operation mode is selected. When the X65 signal is OFF, the Network operation mode is selected.

| Pr. 340 setting | Pr. 79 setting | | X65 signal state | | REMARKS |
|---|---|---|---|---|---|
| | | | ON (PU) | OFF (NET) | |
| 10, 12 | 0 (initial value) | | PU operation mode ① | NET operation mode ② | — |
| | 1 | | PU operation mode | | PU operation mode fixed |
| | 2 | | NET operation mode | | NET operation mode fixed |
| | 3, 4 | | External/PU combined operation mode | | External/PU combined operation mode fixed |
| | 6 | | PU operation mode ① | NET operation mode ② | Switching between operation modes is enabled while running. |
| | 7 | X12 (MRS) ON | Switching between the External operation mode and PU operation mode is enabled. ② | | Output is shutoff in the External operation mode. |
| | | X12 (MRS) OFF | External operation mode | | The operation mode is forcibly switched to the External operation mode. |

***Tab. 5-102:*** *Operation mode switching by signal X65*

① When the X66 signal is ON, the NET operation mode is selected.

② When the X16 signal is OFF, the PU operation mode is selected. Also, when "0" is set for Pr. 550 "NET mode operation command source selection" and the communication option is not connected (communication option is the command source), the PU operation mode is selected.

● To switch between the Network operation mode and the External operation mode

① Set Pr. 79 = "0" (initial value) or "2, "6" or "7". (When Pr. 79 = "7" and the X12 (MRS) signal is ON, the operation mode can be switched.)

② Set Pr. 340 "Communication startup mode selection" = "0" (initial value), "1" or "2".

③ Set "66" in one of Pr. 178 to Pr. 189 to assign the NET-External operation switching signal (X66) to a terminal.

④ When the X66 signal is ON, Network operation mode is selected. When the X66 signal is OFF, the External operation mode is selected.

| Pr. 340 setting | Pr. 79 setting | | X66 signal state | | REMARKS |
|---|---|---|---|---|---|
| | | | ON (NET) | OFF (External) | |
| 0 (initial value), 1, 2 | 0 (initial value) | | NET operation mode ① | External operation mode ② | — |
| | 1 | | PU operation mode | | PU operation mode fixed |
| | 2 | | NET operation mode ① | External operation mode | Switching to PU operation mode is disabled. |
| | 3, 4 | | External/PU combined operation mode | | External/PU combined operation mode fixed |
| | 6 | | NET operation mode ① | External operation mode ② | Switching between operation modes is enabled while running. |
| | 7 | X12 (MRS) ON | NET operation mode ① | External operation mode ② | Output is shutoff in the External operation mode. |
| | | X12 (MRS) OFF | External operation mode | | The operation mode is forcibly switched to the External operation mode. |

***Tab. 5-103:*** *Operation mode switching by signal X66*

① When Pr. 550 "NET mode operation command source selection" = "0" (communication option control source)" and no communication option is connected, the External operation mode is selected.

② When the X16 signal is OFF, the PU operation mode is selected. Also, when the X65 signal is assigned, the operation mode follows the ON/OFF state of the X65 signal.

**NOTES**

The priority of Pr. 79 and Pr. 340 and signals is Pr. 79 > X12 > X66 > X65 > X16 > Pr. 340.

Changing the terminal assignment using Pr. 178 to Pr. 189 (input terminal function selection) may affect the other functions. Set parameters after confirming the function of each terminal.

| Parameters referred to | | | |
|---|---|---|---|
| Pr. 15 | Jog frequency | => | page 5-278 |
| Pr. 4 to Pr. 6, Pr. 24 to 27, Pr. 232 to Pr. 239 | (multi-speed operation) | => | page 5-182 |
| Pr. 75 | Reset selection/disconnected PU detection/PU stop selection | => | page 5-184 |
| Pr. 161 | Frequency setting/key lock operation selection | => | page 5-190 |
| Pr. 178 to Pr. 182 | (input terminal function selection) | => | page 5-409 |
| Pr. 190 to Pr. 196 | (output terminal function selection) | => | page 5-350 |
| Pr. 340 | Communication startup mode selection | => | page 5-264 |
| Pr. 550 | NET mode operation command source selection | => | page 5-266 |

## 5.9.2 Startup in Network operation mode at power-ON

When power is switched ON or when power comes back ON after an instantaneous power failure, the inverter can be started up in the Network operation mode. After the inverter starts up in the Network operation mode, parameter writing and operation can be commanded from programs.

Set this mode when performing communication operation using the RS-485 terminals or a communication option.

| Pr. | Name | Initial value | Setting range | Description |
|---|---|---|---|---|
| 79<br>D000 | Operation mode selection | 0 | 0 to 4, 6, 7 | Selects the operation mode.<br>(Refer to page 5-255.) |
| 340<br>D001 | Communication startup mode selection | 0 | 0 | Follows the Pr. 79 setting. |
| | | | 1,2 | The inverter starts up in the Network operation mode.<br>If an instantaneous power failure occurs when "2" is set, the operating status before the instantaneous power failure is maintained. |
| | | | 10,12 | The inverter starts up in the Network operation mode. The operation mode can be changed between the PU operation mode and Network operation mode from the operation panel.<br>If an instantaneous power failure occurs when "12" is set, running is continued at the condition before the instantaneous power failure. |

### Selecting the operation mode for power-ON (Pr. 340)

Depending on the Pr. 79 and Pr. 340 settings, the operation mode at power-ON (reset) changes as described below.

| Pr. 340 setting | Pr. 79 setting | Operation mode at power-ON, at power restoration, or after a reset | Operation mode switching |
|---|---|---|---|
| 0 (initial value) | 0 (initial value) | External operation mode | Switching among the External, PU, and NET operation modes is enabled. ② |
| | 1 | PU operation mode | PU operation mode fixed |
| | 2 | External operation mode | Switching between the External and NET operation modes is enabled.<br>Switching to PU operation mode is disabled |
| | 3, 4 | External/PU combined operation mode | Operation mode switching is disabled |
| | 6 | External operation mode | Switching among the External, PU, and NET operation mode is enabled while running. |
| | 7 | X12 (MRS) signal ONExternal operation mode | Switching among the External, PU, and NET operation modes is enabled. ② |
| | | X12 (MRS) signal OFF External operation mode | External operation mode fixed. (Forcibly switched to External operation mode.) |
| 1, 2 ① | 0 | NET operation mode | Same as Pr. 340 ="0" setting |
| | 1 | PU operation mode | |
| | 2 | NET operation mode | |
| | 3, 4 | External/PU combined operation mode | |
| | 6 | NET operation mode | |
| | 7 | X12(MRS) signal ON NET operation mode | |
| | | X12 (MRS) signal OFF External operation mode | |
| 10, 12 ① | 0 | NET operation mode | Switching between the PU and NET operation mode is enabled ③ |
| | 1 | PU operation mode | Same as Pr. 340 = "0" setting |
| | 2 | NET operation mode | NET operation mode fixed |
| | 3, 4 | External/PU combined operation mode | Same as Pr. 340 = "0" setting |
| | 6 | NET operation mode | Switching between the PU and NET operation mode is enabled while running. ③ |
| | 7 | External operation mode | Same as Pr. 340 = "0" setting |

***Tab. 5-104:*** *Operation mode of the inverter at power on*

① Use Pr. 340 = "2 or 12" setting to perform communication with the RS-485 terminals.
Even if an instantaneous power failure occurs while Pr. 57 "Restart coasting time" ≠ "9999" (with automatic restart after instantaneous power failure), inverter continues operation at the condition before the instantaneous failure.

② The operation mode cannot be directly changed between the PU operation mode and Network operation mode.

③ Switching between the PU and NET operation modes is available with the PU/EXT key on the operation panel (FR-DU08) and the X65 signal.

| Parameters referred to | | | |
|---|---|---|---|
| Pr. 57 | Restart coasting time | => | page 5-540, page 5-549 |
| Pr. 79 | Operation mode selection | => | page 5-255 |

## 5.9.3 Start command source and frequency command source during communication operation

The start and frequency commands from an external device can be made valid when using the RS-485 terminals or the communication option. The command source in the PU operation mode can also be selected.

| Pr. | Name | Initial value | Setting range | Description |
|---|---|---|---|---|
| 338<br>D010 | Communication operation command source | 0 | 0 | Start command source is communication. |
| | | | 1 | Start command source is external. |
| 339<br>D011 | Communication speed command source | 0 | 0 | Frequency command source is communication. |
| | | | 1 | Frequency command source is external. |
| | | | 2 | Frequency command source is external. (When there is no external input, the frequency command via communication is valid, and the frequency command from terminal 2 is invalid.) |
| 550<br>D012 | NET mode operation command source selection | 9999 | 0 | The communication option is the command source when in the NET operation mode. |
| | | | 1 | The RS-485 terminals are the command source when in the NET operation mode. |
| | | | 9999 | Communication option is recognized automatically.<br>Normally, the RS-485 terminals are the command source. When the communication option is mounted, the communication option is the command source. |
| 551<br>D013 | PU mode operation command source selection | 9999 | 1 | The RS-485 terminals are the command source when in the PU operation mode. |
| | | | 2 | The PU connector is the command source when in the PU operation mode. |
| | | | 3 | The USB connector is the command source when in the PU operation mode. |
| | | | 9999 | USB automatic recognition<br>Normally, the PU connector is the command source. When the USB is connected, the USB connector is the command source. |

**Selection of command source in Network operation mode (Pr. 550)**

- Either of the RS-485 terminals or the communication option can be specified for the command source in the Network operation mode.
- For example, whether or not the communication option is mounted, set Pr. 550 = "1" to write parameters from or input the start and frequency commands via RS-485 terminals in the Network operation mode.

**NOTE**

In the initial setting, "9999" (communication option automatic recognition) is set for Pr. 550. Thus, if the communication option is mounted, parameters cannot be written or the start and frequency commands cannot be sent by communications that use the RS-485 terminals. (Monitoring or parameter reading can be performed.)

**Selection of the command source of the PU operation mode (Pr. 551)**

- Any of the PU connector, RS-485 terminals, or USB connector can be specified as the command source in the PU operation mode.
- Set Pr. 551="1" to use communication connected to the RS-485 terminals to write parameters or execute start and frequency commands in the PU operation mode. Set Pr. 551 = "3" or "9999" to use the USB connector.

**NOTES**

When Pr. 550 = "1" (NET mode RS-485 terminals) and Pr. 551 = "1" (PU mode RS-485 terminals), the PU operation mode has a precedence. For this reason, if the communication option is not mounted, switching to the Network operation mode is not longer possible.

Changed setting values are enabled at power-ON or inverter reset.

| Pr. 550 setting | Pr. 551 setting | Command source | | | | REMARKS |
|---|---|---|---|---|---|---|
| | | PU connector | USB connector | RS-485 terminals | Communication option | |
| 0 | 1 | × | × | PU operation mode ① | NET operation mode ② | |
| | 2 | PU operation mode | × | × | NET operation mode ② | |
| | 3 | × | PU operation mode | × | NET operation mode ② | |
| | 9999 (initial value) | PU operation mode ③ | PU operation mode ③ | × | NET operation mode ② | |
| 1 | 1 | × | × | PU operation mode ① | × | Switching to NET operation mode disabled |
| | 2 | PU operation mode | × | NET operation mode | × | |
| | 3 | × | PU operation mode | NET operation mode | × | |
| | 9999 (initial value) | PU operation mode ③ | PU operation mode ③ | NET operation mode | × | |
| 9999 (initial value) | 1 | × | × | PU operation mode ① | NET operation mode ② | |
| | 2 | PU operation mode | × | × | NET operation mode ② | With communication option |
| | | | | NET operation mode | × | Without communication option |
| | 3 | × | PU operation mode | × | NET operation mode ② | With communication option |
| | | | | NET operation mode | × | Without communication option |
| | 9999 (initial value) | PU operation mode ③ | PU operation mode ③ | × | NET operation mode ② | With communication option |
| | | | | NET operation mode | × | Without communication option |

***Tab. 5-105:*** *Parameter 550 and 551 settings*

① The Modbus-RTU protocol cannot be used in the PU operation mode. To use the Modbus-RTU protocol, set Pr. 551 = "2".

② If the communication option is not mounted, switching to the Network operation mode is not longer possible.

③ When Pr. 551 = "9999", the priority of the PU command source is USB connector > PU connector.

### Controllability through communication

| Command source | Condition (Pr. 551 setting) | Item | Controllability in each operation mode | | | | | |
|---|---|---|---|---|---|---|---|---|
| | | | PU operation | External operation | External/PU combined operation mode 1 (Pr. 79 =3) | External/PU combined operation mode 2 (Pr. 79 =4) | NET operation (when RS-485 terminals are used) ⑥ | NET operation (when communication option is used) ⑦ |
| Control by RS-485 communication via PU connector | 2 (PU connector) 9999 (automatic recognition, without USB connection) | Operation (start) command | ○ | × | × | ○ | × | |
| | | Operation (stop) command | ○ | Δ ③ | Δ ③ | ○ | Δ ③ | |
| | | Running frequency | ○ | × | ○ | × | × | |
| | | Monitor | ○ | ○ | ○ | ○ | ○ | |
| | | Parameter writing | ○ ④ | × ⑤ | ○ ④ | ○ ④ | × ⑤ | |
| | | Parameter read | ○ | ○ | ○ | ○ | ○ | |
| | | Inverter reset | ○ | ○ | ○ | ○ | ○ | |
| | Other than the above | Operation (start) command | × | × | × | × | × | |
| | | Operation (stop) command | Δ ③ | Δ ③ | Δ ③ | Δ ③ | Δ ③ | |
| | | Running frequency | × | × | × | × | × | |
| | | Monitor | ○ | ○ | ○ | ○ | ○ | |
| | | Parameter writing | × ⑤ | × ⑤ | × ⑤ | × ⑤ | × ⑤ | |
| | | Parameter read | ○ | ○ | ○ | ○ | ○ | |
| | | Inverter reset | ○ | ○ | ○ | ○ | ○ | |
| Control by communication via RS-485 terminals | 1 (RS-485 terminals) | Operation command (start, stop) | ○ | × | × | ○ | × | |
| | | Running frequency | ○ | × | ○ | × | × | |
| | | Monitor | ○ | ○ | ○ | ○ | ○ | |
| | | Parameter writing | ○ ④ | × ⑤ | ○ ④ | ○ ④ | × ⑤ | |
| | | Parameter read | ○ | ○ | ○ | ○ | ○ | |
| | | Inverter reset | ○ | ○ | ○ | ○ | ○ | |
| | Other than the above | Operation command (start, stop) | × | × | × | × | ○ ① | × |
| | | Running frequency | × | × | × | × | ○ ① | × |
| | | Monitor | ○ | ○ | ○ | ○ | ○ | ○ |
| | | Parameter writing | × ⑤ | × ⑤ | × ⑤ | × ⑤ | ○ ④ | × ⑤ |
| | | Parameter read | ○ | ○ | ○ | ○ | ○ | ○ |
| | | Inverter reset | × | × | × | × | ○ ② | × |

***Tab. 5-106:*** *Functions in the single operation modes (1)*

| Command source | Condition (Pr. 551 setting) | Item | Controllability in each operation mode | | | | | |
|---|---|---|---|---|---|---|---|---|
| | | | PU operation | External operation | External/PU combined operation mode 1 (Pr. 79 =3) | External/PU combined operation mode 2 (Pr. 79 =4) | NET operation (when RS-485 terminals are used) ⑥ | NET operation (when communication option is used) ⑦ |
| Control via USB connector | 3 (USB connector) 9999 (automatic recognition, with USB connection) | Operation command (start, stop) | ○ | × | × | ○ | × | |
| | | Running frequency | ○ | × | ○ | × | × | |
| | | Monitor | ○ | ○ | ○ | ○ | ○ | |
| | | Parameter writing | ○④ | ×⑤ | ×⑤ | ×⑤ | ×⑤ | |
| | | Parameter read | ○ | ○ | ○ | ○ | ○ | |
| | | Inverter reset | ○ | ○ | ○ | ○ | ○ | |
| | Other than the above | Operation command (start, stop) | × | × | × | × | × | |
| | | Running frequency | × | × | × | × | × | |
| | | Monitor | ○ | ○ | ○ | ○ | ○ | |
| | | Parameter writing | ×⑤ | ×⑤ | ×⑤ | ×⑤ | ×⑤ | |
| | | Parameter read | ○ | ○ | ○ | ○ | ○ | |
| | | Inverter reset | ○ | ○ | ○ | ○ | ○ | |
| Communication option (via communication) | — | Operation command (start, stop) | × | × | × | × | × | ○① |
| | | Running frequency | × | × | × | × | × | ○① |
| | | Monitor | ○ | ○ | ○ | ○ | ○ | ○ |
| | | Parameter writing | ×⑤ | ×⑤ | ×⑤ | ×⑤ | ×⑤ | ○④ |
| | | Parameter read | ○ | ○ | ○ | ○ | ○ | ○ |
| | | Inverter reset | × | × | × | × | × | ○② |
| External terminal at the control circuit | — | Inverter reset | ○ | ○ | ○ | ○ | ○ | |
| | | Operation command (start, stop) | × | ○ | ○ | × | ×① | |
| | | Frequency setting | × | ○ | × | ○ | ×① | |

○: Valid, ×: Invalid, Δ: Partially valid

***Tab. 5-106:*** *Functions in the single operation modes (2)*

① Follows the Pr. 338 "Communication operation command source" and Pr. 339 "Communication speed command source" settings. (Refer to page 5-266.)

② At occurrence of RS-485 communication error, the inverter cannot be reset from the computer.

③ PU stop is only enabled. PS is displayed on the operation panel during PU stop. Follows the Pr. 75 "Reset selection/disconnected PU detection/PU stop selection" setting. (Refer to page 5-184.)

④ Writing of some parameters may be disabled by the Pr. 77 "Parameter write selection" setting and the operating condition. (Refer to page 5-195.)

⑤ Some parameters are write-enabled independently of the operation mode and command source presence/absence. Writing is also enabled when Pr. 77 = "2". (Refer to page 5-195.) Parameter clear is disabled.

⑥ When Pr. 550 "NET mode operation command source selection" = "1" (RS-485 terminals enabled), or Pr. 550 "NET mode operation command source selection" = "9999" with no communication option connected.

⑦ When Pr. 550 "NET mode operation command source selection" = "0" (communication option enabled), or Pr. 550 "NET mode operation command source selection" = "9999" with communication option connected.

### Operation at fault

| Fault record | Conditions (Pr. 551 setting) | Operation in each operation mode at error occurrences | | | | | |
|---|---|---|---|---|---|---|---|
| | | PU operation | External operation | External/PU combined operation mode 1 (Pr. 79 =3) | External/PU combined operation mode 2 (Pr. 79 =4) | NET operation (when RS-485 terminals are used) ⑤ | NET operation (when communication option is used) ⑥ |
| Inverter fault | — | Stop | | | | | |
| PU connector disconnection | 2 (PU connector) 9999 (automatic recognition) | Stop/continued ①④ | | | | | |
| | Other than 2 | Stop/continued ① | | | | | |
| Communication error at PU connector | 2 (PU connector) | Stop/continued ② | Continued | | Stop/ continued ② | Continued | |
| | Other than 2 | Continued | | | | | |
| Communication error at RS-485 terminals | 1 (RS-485 terminals) | Stop/continued ② | Continued | | Stop/ continued ② | Continued | |
| | Other than 1 | Continued | | | | Stop/continued ② | Continued |
| Communication error at USB connector | 3 (USB connector) 9999 (automatic recognition) | Stop/continued ② | Continued | | | | |
| | Other than 3 | Continued | | | | | |
| Communication error at communication option | — | Continued | | | | | Stop/continued ③ |

***Tab. 5-107:*** *Operation at fault*

① Selectable with Pr. 75 "Reset selection/disconnected PU detection/PU stop selection"

② Selectable with Pr. 122 "PU communication check time interval", Pr. 336 "RS-485 communication check time interval", and Pr. 548 "USB communication check time interval"

③ Follows the communication option

④ In the PU JOG operation mode, operation always stops when the PU is disconnected. The operation of PU disconnection (E.PUE) follows the Pr. 75 "Reset selection/disconnected PU detection/PU stop selection" setting.

⑤ When Pr. 550 "NET mode operation command source selection" = "1" (RS-485 terminals enabled), or Pr. 550 "NET mode operation command source selection" = "9999" with no communication option connected.

⑥ When Pr. 550 "NET mode operation command source selection" = "0" (communication option enabled), or Pr. 550 "NET mode operation command source selection" = "9999" with communication option connected.

### Selection of control source in Network operation mode (Pr. 338, Pr. 339)

- There are two control sources: the start command source, which controls the signals related to the inverter stand command and function selection, and the speed command source, which controls signals related to frequency setting.
- The table below shows the commands from the external terminals and communication (RS-485 terminals or communication option) in the Network operation mode.

| Operation location selection | | | Pr. 338 "Communication operation command source" | | 0: NET | | | 1: EXT | | | REMARKS |
|---|---|---|---|---|---|---|---|---|---|---|---|
| | | | Pr. 339 "Communication speed command source" | | 0: NET | 1: EXT | 2: EXT | 0: NET | 1: EXT | 2: EXT | |
| Fixed function (terminal-equivalent function) | | | Running frequency from communication | | NET | — | NET | NET | — | NET | |
| | | | Terminal 2 | | — | External | — | — | — | — | |
| | | | Terminal 4 | | — | External | | — | External | | |
| | | | Terminal 1 | | Compensation | | | | | | |
| Selectable function | Pr. 178 to Pr. 189 setting | 0 | RL | Low-speed operation command/remote setting Clear/Stop-on-contact selection 0 | NET | External | | NET | External | | Pr. 59 = "0" (multi-speed) Pr. 59 ≠ "0" (remote) Pr. 270 = "1, 3, 11, or 13" (stop-on-contact) |
| | | 1 | RM | Middle-speed operation command/ remote setting deceleration | NET | External | | NET | External | | |
| | | 2 | RH | High-speed operation command/remote setting acceleration | NET | External | | NET | External | | |
| | | 3 | RT | Second function selection/stop-on-contact selection 1 | NET | | | External | | | Pr. 270 = "1, 3, 11, or 13" (stop-on-contact) |
| | | 4 | AU | Terminal 4 input selection | — | Combined | | — | Combined | | |
| | | 5 | JOG | Jog operation selection | — | | | External | | | |
| | | 6 | CS | Selection of automatic restart after instantaneous power failure, flying start | External | | | | | | |
| | | 7 | OH | External thermal relay input | External | | | | | | |
| | | 8 | REX | 15-speed selection | NET | External | | NET | External | | Pr. 59 = "0" (multi-speed) |
| | | 9 | X9 | Third function selection | NET | | | External | | | |
| | | 10 | X10 | Inverter run enable signal | External | | | | | | |
| | | 11 | X11 | FR-HC2/FR-CC2 connection, instantaneous power failure detection | External | | | | | | |
| | | 12 | X12 | PU operation external interlock | External | | | | | | |
| | | 13 | X13 | External DC injection brake operation start | NET | | | External | | | |
| | | 14 | X14 | PID control valid terminal | NET | External | | NET | External | | |
| | | 15 | BRI | Brake opening completion signal | NET | | | External | | | |
| | | 16 | X16 | PU/External operation switchover | External | | | | | | |
| | | 17 | X17 | Load pattern selection forward/reverse rotation boost | NET | | | External | | | |
| | | 18 | X18 | V/F switchover | NET | | | External | | | |
| | | 19 | X19 | Load torque high-speed frequency | NET | | | External | | | |
| | | 20 | X20 | S-pattern acceleration/deceleration C switchover | NET | | | External | | | |
| | | 22 | X22 | Orientation command | NET | | | External | | | |
| | | 23 | LX | Pre-excitation/servo ON | NET | | | External | | | |
| | | 24 | MRS | Output stop | Combined | | | External | | | Pr. 79 ≠ "7" |
| | | | | PU operation interlock | External | | | | | | Pr. 79 = "7" When X12 signal is not assigned. |
| | | 25 | STP (STOP) | Start self-holding selection | - | | | External | | | |
| | | 26 | MC | Control mode switchover | NET | | | External | | | |
| | | 27 | TL | Torque limit selection | NET | | | External | | | |
| | | 28 | X28 | Start-time tuning start external input | NET | | | External | | | |
| | | 37 | X37 | Traverse function selection | NET | | | External | | | |

***Tab. 5-108:*** *Writing operation and speed commands (1)*

| Operation location selection | | | Pr. 338 "Communication operation command source" | | 0: NET | | | 1: EXT | | | REMARKS |
|---|---|---|---|---|---|---|---|---|---|---|---|
| | | | Pr. 339 "Communication speed command source" | | 0: NET | 1: EXT | 2: EXT | 0: NET | 1: EXT | 2: EXT | |
| Selectable function | Pr. 178 to Pr. 189 setting | 42 | X42 | Torque bias selection 1 | NET | | | External | | | |
| | | 43 | X43 | Torque bias selection 2 | NET | | | External | | | |
| | | 44 | X44 | P/PI control switchover | NET | | | External | | | |
| | | 45 | BRI2 | Second brake sequence open completion | NET | | | External | | | |
| | | 46 | TRG | Trace trigger input | NET | | | External | | | |
| | | 47 | TRC | Trace sampling start/end | NET | | | External | | | |
| | | 50 | SQ | Sequence start | External, NET | | | External | | | Pr. 414 = "1": Valid when there is external or network input<br>Pr. 414 = "2": External |
| | | 51 | X51 | Fault clear signal | Combined | | | External | | | |
| | | 60 | STF | Forward rotation command | NET | | | External | | | |
| | | 61 | STR | Reverse rotation command | NET | | | External | | | |
| | | 62 | RES | Inverter reset | External | | | | | | |
| | | 64 | X64 | PID forward/reverse action switchover | NET | External | | NET | External | | |
| | | 65 | X65 | PU/NET operation switchover | External | | | | | | |
| | | 66 | X66 | External/NET operation switchover | External | | | | | | |
| | | 67 | X67 | Command source switchover | External | | | | | | |
| | | 68 | NP | Simple position pulse train sign | External | | | | | | |
| | | 69 | CLR | Simple position droop pulse clear | External | | | | | | |
| | | 70 | X70 | DC feeding operation permission | NET | | | External | | | |
| | | 71 | X71 | DC feeding cancel | NET | | | External | | | |
| | | 72 | X72 | PID integral value reset | NET | External | | NET | External | | |
| | | 73 | X73 | Second PID P control switchover | NET | External | | NET | External | | |
| | | 74 | X74 | Magnetic flux decay output shutoff signal | NET | | | External | | | |
| | | 76 | X76 | Proximity dog | External | | | | | | |
| | | 77 | X77 | Pre-charge end command | NET | External | | NET | External | | |
| | | 78 | X78 | Second pre-charge end command | NET | External | | NET | External | | |
| | | 79 | X79 | Second PID forward/reverse action switchover | NET | External | | NET | External | | |
| | | 80 | X80 | Second PID control valid terminal | NET | External | | NET | External | | |
| | | 87 | X87 | Sudden stop | Combined | | | Extermal | | | |
| | | 92 | X92 | Emergency stop | External | | | | | | |
| | | 93 | X93 | Torque limit selection | NET | | | External | | | |

***Tab. 5-108:*** *Writing operation and speed commands (2)*

**Explanation of terms in table**

External (EXT) : Commands from external terminal are only valid.
NET : Commands via communication are only valid.
Combined : Command from both external terminal and communication is valid.
— : Command from either of external terminal and communication is invalid.
Compensation : Commands are valid only from external terminal signals when Pr. 28 "Multi-speed input compensation selection" = "1".

**NOTES**

The command source of communication follows the Pr. 550 and Pr. 551 settings.

The Pr. 338 and Pr. 339 settings can be changed while the inverter is running when Pr. 77 = "2". Note that the setting change is applied after the inverter has stopped. Until the inverter has stopped, communication operation command source and communication speed command source before the setting change are valid.

**Command source switchover via external terminals (X67)**

- In the Network operation mode, the start command source and speed command source can be switched over by the command source switchover signal (X67). This can be used to control signal inputs from both the external terminals and via communication.
- For the X67 signal, set "67" to any of Pr. 178 to Pr. 189 (input terminal function selection) to assign the function to a control terminal.
- When the X67 signal is OFF, the start command source and speed command source are given via control terminals.

| X67 signal state | Start command source | Speed command source |
|---|---|---|
| Signal not assigned | According to Pr. 338 | According to Pr. 339 |
| ON | | |
| OFF | Commands from external terminals are only valid. | |

***Tab. 5-109:*** *Switching of command source by the signal X67*

**NOTES**

The ON/OFF state of the X67 signal is applied only during a stop. When the terminals are switched during operation, the ON/OFF state is applied after a stop.

When the X67 is OFF, a reset via communication is disabled.

Changing the terminal assignment using Pr. 178 to Pr. 189 (input terminal function selection) may affect the other functions. Set parameters after confirming the function of each terminal.

| Parameters referred to | | | |
|---|---|---|---|
| Pr. 28 | Multi-speed input compensation selection | => | page 5-182 |
| Pr. 59 | Remote function selection | => | page 5-239 |
| Pr. 79 | Operation mode selection | => | page 5-255 |

## 5.9.4 Reverse rotation prevention selection

This function can prevent reverse rotation fault resulting from the incorrect input of the start signal.

| Pr. | Name | Initial value | Setting range | Description |
|---|---|---|---|---|
| 78<br>D020 | Reverse rotation prevention selection | 0 | 0 | Both forward and reverse rotations allowed |
| | | | 1 | Reverse rotation disabled |
| | | | 2 | Forward rotation disabled |

- Set this parameter to limit the motor rotation to only one direction.
- This parameter is valid for all of the reverse rotation and forward rotation keys of the operation panel (FR-DU08) and of parameter unit (FR-PU07), the start signals (STF, STR signals) via external terminals, and the forward and reverse rotation commands through communication.

## 5.9.5 Frequency setting via pulse train input

A pulse train input to the terminal JOG can be used to set the inverter's speed command.

Moreover, speed synchronized operation of an inverter can be performed by using the pulse train output together with the terminal JOG.

| Pr. | Name | Initial value | | Setting range | Description | |
|---|---|---|---|---|---|---|
| | | FM | CA | | | |
| 291 D100 | Pulse train I/O selection | 0 | | | **Pulse train input (terminal JOG)** | **Pulse train output ① (terminal FM)** |
| | | | | 0 | JOG signal ① | FM output ② |
| | | | | 1 | Pulse train input | FM output ② |
| | | | | 10 ② | JOG signal ① | High-speed pulse train output (50% duty) |
| | | | | 11 ② | Pulse train input | High-speed pulse train output (50% duty) |
| | | | | 20 ② | JOG signal ① | High-speed pulse train output (ON width fixed) |
| | | | | 21 ② | Pulse train input | High-speed pulse train output (ON width fixed) |
| | | | | 100 ② | Pulse train input | High-speed pulse train output (ON width fixed)<br>Output of pulse train input as is |
| 384 D101 | Input pulse division scaling factor | 0 | | 0 | Pulse train input disabled | |
| | | | | 1 to 250 | Division ratio on the input pulse. The frequency resolution on the input pulse changes according to this setting. | |
| 385 D110 | Frequency for zero input pulse | 0 Hz | | 0 to 590 Hz | Sets the frequency when the input pulse is zero (bias). | |
| 386 D101 | Frequency for maximum input pulse | 60 Hz | 50 Hz | 0 to 590 Hz | Sets the frequency when the input pulse is maximum (gain). | |

① Function assigned to Pr. 185 "JOG terminal function selection".

② Valid only for the FM type inverters.

### Selection of pulse train input (Pr. 291)

- Setting Pr. 291 "Pulse train I/O selection" = "1, 11, 21, 100" and Pr. 384 "Input pulse division scaling factor" ≠ "0" changes the function of terminal JOG to a pulse train input so that the frequency can be set to the inverter. In the initial setting, the JOG signal is assigned to terminal JOG. A maximum pulse train of 100k pulses/s can be input.
- Connection with an open collector output system pulse generator

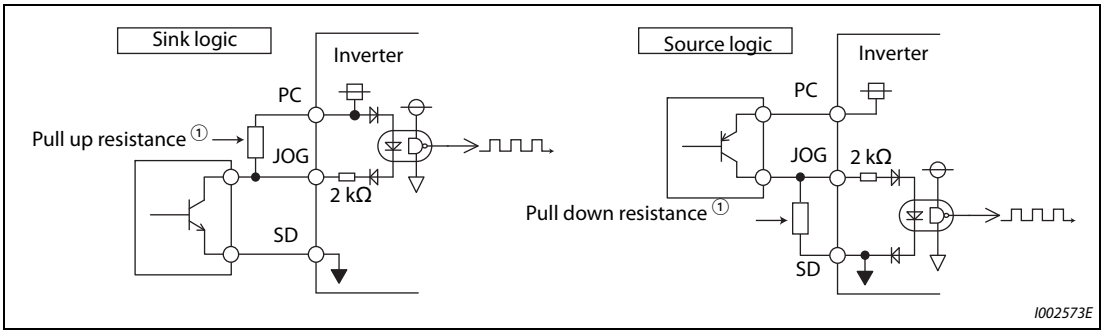


***Fig. 5-107:*** *Pulse train input*

① When the wiring length is long with open collector outputs, the influence of stray capacitance causes the pulse to flatten out and prevents the input pulse from being recognized.
When the wiring length is long (10 m or longer of shielded twisted pair cable with a recommended cable gauge of 0.75 $mm^2$), connect the open collector output signal to the power supply by an external pull-up resistance. The table below shows the reference resistance values for wiring length. The stray capacitance of the wiring changes considerably according to how the cable is laid, thus the above wiring lengths are not guaranteed values. When using a pull-up/down resistance, check the permissible load of the resistor and the permissible load current of the output transistor, and use within the permissible range.

| Wiring length | Less than 10 m | 10 to 50 m | 50 to 100 m |
|---|---|---|---|
| Pull-up/down resistance | Not required | 1 kΩ | 470 Ω |
| Load current (reference) | 10 mA | 35 mA | 65 mA |

***Tab. 5-110:*** *Resistance values for pull up and pull down resistances*

- Connection with a complementary output system pulse generator

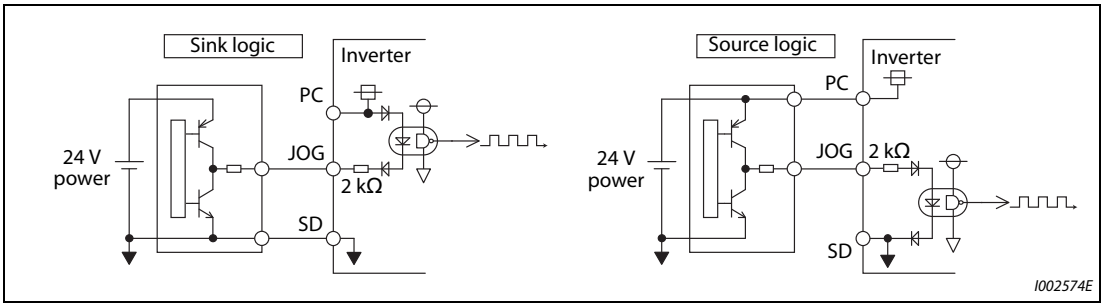


***Fig. 5-108:*** *Pulse generator output*

**NOTES**

When pulse train input is selected, the function assigned to terminal JOG by Pr. 185 "JOG terminal function selection" is invalid.

When "2" (simple position pulse train command by pulse train input) is set to Pr. 419 "Position command source selection", the JOG terminal becomes the simple position pulse train terminal regarding of the Pr. 291 setting.

Pr. 291 is the selection parameter for pulse train output/FM output. Thus, before changing the setting, check the specifications of the device connected to the terminal FM. (For the pulse train output, refer to page 5-335.)

### Pulse train input specification

| Item | | Specification |
|---|---|---|
| Supported pulse method | | Open collector output.<br>Complementary output. (24 V power supply voltage) |
| HIGH input level | | 20 V or more (voltage between JOG and SD) |
| LOW input level | | 5 V or less (voltage between JOG and SD) |
| Maximum input pulse rate | | 100 kpps |
| Minimum input pulse width | | 2.5 µs |
| Input resistance/load current | | 2 kΩ (typ)/10 mA (typ) |
| Maximum wiring length (reference value) | Open collector output method | 10 m (0.75 $mm^2$/twisted pair) |
| | Complementary output method | 100 m (output resistance 50 Ω) ① |
| Detection resolution | | 1/3750 |

***Tab. 5-111:*** *Pulse train input specification*

① The wiring length of complementary output is dependent on the output wiring specification of the complementary output unit. The stray capacitance of the wiring changes considerably according to how the cable is laid, thus the maximum wiring length is not a guaranteed value.

### Adjustment of pulse train and frequency (Pr. 385, Pr. 386)

The frequency during zero input pulse and maximum input pulse can be set with Pr. 385 "Frequency for zero input pulse" and Pr. 386 "Frequency for maximum input pulse", respectively.

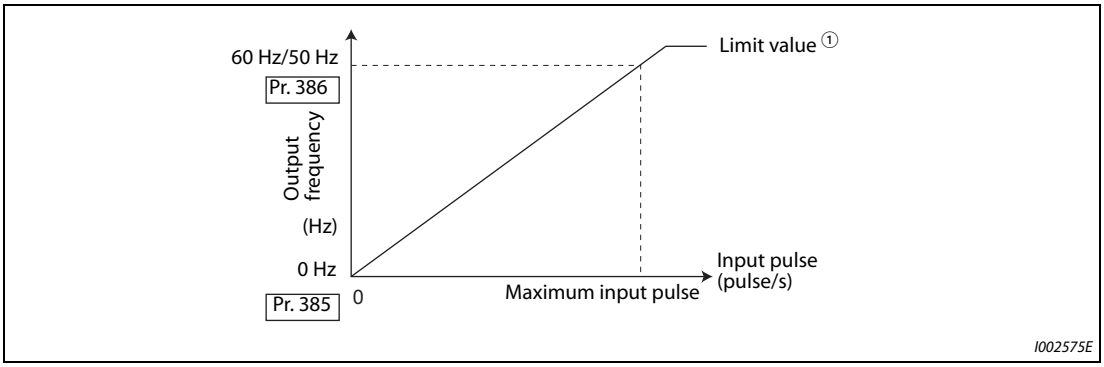


***Fig. 5-109:*** *Adjustment of pulse train input*

① Limit value = (Pr. 386 - Pr. 385) x 1.1 + Pr. 385

### How to calculate the input pulse division scaling factor (Pr. 384)

- The maximum number of pulses can be calculated by the following formula with Pr. 384 "Input pulse division scaling factor":
  Maximum number of pulses (pulse/s) = Pr. 384 × 400 (maximum 100k pulses/s)
  (number of detectable pulses = 11.45 pulses/s)
- For example, to run the invert at 0 Hz when pulse train input is zero and at 30 Hz when pulse train is 4000 pulses/sec, set the inverter as follows:
  Pr. 384 = 10 (maximum number of input pulses 4000 pulses/s)
  Pr. 385 = 0 Hz, Pr. 386 = 30 Hz (pulse train limit value 33 Hz)

**NOTE**

The priority of the frequency command by the external signals is "Jog operation > multi-speed operation > terminal 4 analog input". When pulse train input is enabled (Pr. 291 = "1, 11, 21, 100" and Pr. 384 ≠ "0"), terminal 2 analog input becomes invalid.

**Speed synchronized operation by pulse input/output**

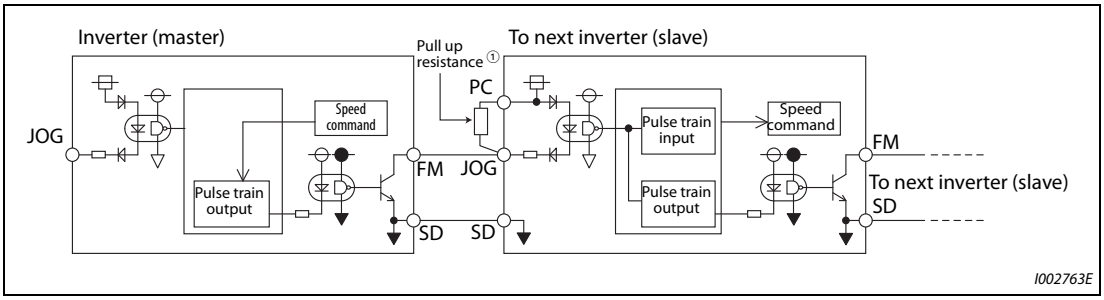


***Fig. 5-110:*** *Speed synchronization*

① When the wiring length between FM and JOG is long, the influence of stray capacitance causes the pulse to flatten out and prevents the input pulse from being recognized. When the wiring length is long (10 m or longer of shielded twisted pair cable with a recommended cable size of 0.75 $mm^2$), connect the terminal JOG to the terminal PC by an external pull-up resistance. The table below shows the reference resistance values for wiring length.

| Wiring length | Less than 10 m | 10 to 50 m | 50 to 100 m |
|---|---|---|---|
| Pull-up resistance | Not required | 1 kΩ | 470 Ω |
| Load current (reference) | 10 mA | 35 mA | 65 mA |

***Tab. 5-112:*** *Resistance values for pull up and pull down resistances*

The stray capacitance of the wiring changes considerably according to how the cable is laid, thus the above wiring lengths are not guaranteed values.
When using a pull-up/down resistance, check the permissible load of the resistor and the permissible load current (terminal PC: 100 mA, high-speed pulse train output: 85 mA), and use within the permissible range.

- Setting "100" to Pr. 291 enables out of the pulse train input as it is to the pulse train output (terminal FM). Connecting in a daisy chain enables speed synchronized operation of multiple inverters.
- Set Pr. 384 to "125" for inverters that receive pulse train since the maximum pulse train output is 50k pulses/s.
- The maximum number of input pulses should be 50k pulses/s.
- When performing synchronized operation, wire according to the following procedure. (This is to prevent contact input of 24 V from being applied to the terminal FM.)

  ① Set pulse train output (setting other than "0, 1") to Pr. 291 on the master side inverter.
  ② Turn the inverter power supply OFF.
  ③ Wire the slave side terminal JOG-SD to the master side terminal FM-SD.
  ④ Turn the inverter power supply ON.

**NOTES**

After changing the Pr. 291 setting, connect the JOG terminal to the terminal FM-SD. When FM output (voltage output) is taken as the pulse train, take caution to prevent voltage from being applied to the terminal FM.

Use the sink logic (factory setting) for the slave side inverter. The inverter does not operate properly with source logic.

**Speed synchronized operation specification**

| Item | Specification |
|---|---|
| Output pulse format | Pulse width fixed (10 µs) |
| Pulse rate | 0 to 50 kpps |
| Pulse propagation delay | 1 to 2 µs/1 unit ① |

***Tab. 5-113:*** *Speed synchronized operation specification*

① A pulse transmission delay of about 1 to 2 µs in the slave occurs and further increases when the wiring length is long.

| Parameters referred to | | | |
|---|---|---|---|
| Pr. 291 | (Pulse train output) | => | page 5-330 |
| Pr. 419 | Position command source selection | => | page 5-167 |

## 5.9.6 JOG operation

The frequency and acceleration/deceleration time for JOG operation can be set. JOG operation is possible in both External operation and PU.

JOG operation can be used for conveyor positioning, test run, etc.

| Pr. | Name | Initial value | Setting range | Description |
|---|---|---|---|---|
| 15<br>D200 | Jog frequency | 5 Hz | 0 to 590 Hz | Sets the frequency during JOG operation. |
| 16<br>F002 | Jog acceleration/ deceleration time | 0.5 s | 0 to 3600 s<br>(360 s ①) | Sets motor acceleration/deceleration time during JOG operation. For the acceleration/deceleration time, set the time until the frequency ② set to Pr. 20 "Acceleration/deceleration reference frequency" is reached.<br>The acceleration/deceleration times cannot be set separately. |

The above parameter is displayed as a simple mode parameter when the parameter unit (FR-PU07) is mounted. Setting of this parameter is enabled when the operation panel (FR-DU08) is connected and "0" is set to Pr. 160 "User group read selection". (Refer to page 5-208.)

① When Pr. 21 "Acceleration/deceleration time increments" = "0" (initial value), the setting range is "0 to 3600 s" and the setting increment is "0.1 s". When Pr. 21 = "1" is set, this means a setting range of "0 to 360 s" and the setting increment is "0.01 s".

② The Pr. 20 initial value is set to 60 Hz for the FM type and to 50 Hz for the CA type.

### JOG operation in the External operation

- Operation can be started and stopped by the start signals (STF and STR signals) when the Jog operation selection (JOG) signal is ON. (For the operation method, refer to page 4-30.)
- In the initial setting, the JOG signal is assigned to the terminal JOG.

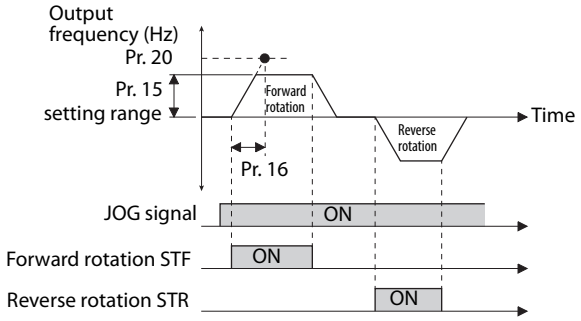


***Fig. 5-111:*** *Jog operation signal timing chart*

### JOG operation in PU

When the operation panel (FR-DU08) or parameter unit (FR-PU07) is in the JOG operation mode, the motor jogs only while the start button is pressed.
(For the operation method, refer to page 4-31.)

**NOTES**

The reference frequency of the acceleration/deceleration time differs according to the Pr. 29 "Acceleration/deceleration pattern selection" setting. (Refer to page 5-232.)

The Pr. 15 setting should be equal to or higher than the Pr. 13 "Starting frequency" setting.

The JOG signal can be assigned to an input terminal by setting Pr. 178 to Pr. 189 (input terminal function selection). Changing the terminal assignment may affect other functions. Set parameters after confirming the function of each terminal.

During JOG operation, the second acceleration/deceleration cannot be selected with the RT signal. (Other second functions are enabled. (Refer to page 5-415.))

When Pr. 79 "Operation mode selection" = "4", JOG operation is started by one push of FWD/REV key on the operation panel (FR-DU08) and stopped by STOP/RESET key.

This function is invalid when Pr. 79 = "3".

Under the position control, when the position command speed creation is completed and the droop pulse is within in-position width, the external JOG operation can be operated. (The JOG operation cannot be performed from PU.)

| Parameters referred to | | | |
|---|---|---|---|
| Pr. 13 | Starting frequency | => | page 5-243 |
| Pr. 20 | Acceleration/deceleration reference frequency | => | page 5-225 |
| Pr. 21 | Acceleration/deceleration time increments | => | page 5-225 |
| Pr. 29 | Acceleration/deceleration pattern selection | => | page 5-232 |
| Pr. 79 | Operation mode selection | => | page 5-255 |
| Pr. 178 to Pr. 182 | (input terminal function selection) | => | page 5-409 |

## 5.9.7 Operation by multi-speed setting

Use these parameters to change among pre-set operation speeds with the terminals. The speeds are pre-set with parameters.

Any speed can be selected by simply turning ON/OFF the contact signals (RH, RM, RL, and REX signals).

| Pr. | Name | Initial value | | Setting range | Description |
|---|---|---|---|---|---|
| | | FM | CA | | |
| 28<br>D300 | Multi-speed input compensation selection | 0 | | 0 | Without compensation |
| | | | | 1 | With compensation |
| 4<br>D301 | Multi-speed setting (high speed) | 60 Hz | 50 Hz | 0 to 590 Hz | Sets the frequency when RH is ON. |
| 5<br>D302 | Multi-speed setting (middle speed) | 30 Hz | | 0 to 590 Hz | Sets the frequency when RM is ON. |
| 6<br>D303 | Multi-speed setting (low speed) | 10 Hz | | 0 to 590 Hz | Sets the frequency when RL is ON. |
| 24<br>D304 | Multi-speed setting (speed 4) | 9999 | | 0 to 590 Hz, 9999 | Frequency from 4th speed to 15th speed can be set according to the combination of the RH, RM, RL and REX signals.<br>9999: Not selected |
| 25<br>D305 | Multi-speed setting (speed 5) | | | | |
| 26<br>D306 | Multi-speed setting (speed 6) | | | | |
| 27<br>D307 | Multi-speed setting (speed 7) | | | | |
| 232<br>D308 | Multi-speed setting (speed 8) | | | | |
| 233<br>D309 | Multi-speed setting (speed 9) | | | | |
| 234<br>D310 | Multi-speed setting (speed 10) | | | | |
| 235<br>D311 | Multi-speed setting (speed 11) | | | | |
| 236<br>D312 | Multi-speed setting (speed 12) | | | | |
| 237<br>D313 | Multi-speed setting (speed 13) | | | | |
| 238<br>D314 | Multi-speed setting (speed 14) | | | | |
| 239<br>D315 | Multi-speed setting (speed 15) | | | | |

**Multi-speed setting (Pr. 4 to Pr. 6)**

The inverter operates at frequencies set in Pr. 4 when RH signal is ON, Pr. 5 when RM signal is ON and Pr. 6 when RL signal is ON.

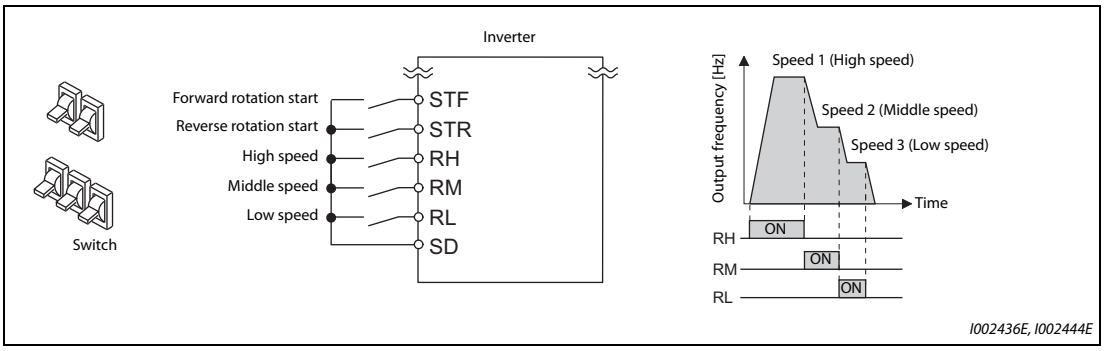


***Fig. 5-112:*** *Multi-speed selection by external terminals*

**NOTES**

In the initial setting, when two or more of multi-speed settings are simultaneously selected, priority is given to the set frequency of the lower signal.
For example, when RH and RM signals turn ON, RM signal (Pr. 5) has a higher priority.

The RH, RM and RL signals are assigned to the terminals RH, RM and RL in the initial status.
Set "0 (RL)", "1 (RM)", and "2 (RH)" in any of Pr. 178 to Pr. 189 (input terminal function selection) to assign the signals to other terminals.

**Multi-speed setting for 4th speed or more (Pr. 24 to Pr. 27, Pr. 232 to Pr. 239)**

- The frequency from 4th speed to 15th speed can be set by the combination of the RH, RM, RL, and REX signals. Set the running frequencies in Pr. 24 to Pr. 27, Pr. 232 to Pr. 239. (In the initial status, 4th to 15th speeds are invalid.)
- For the terminal used for REX signal input, set "8" in any of Pr. 178 to Pr. 189 (input terminal function selection) to assign the function.

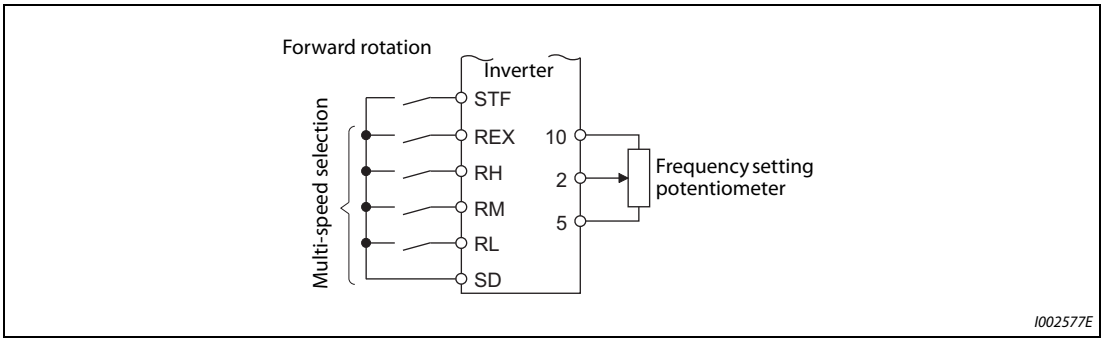


***Fig. 5-113:*** *Connection example*

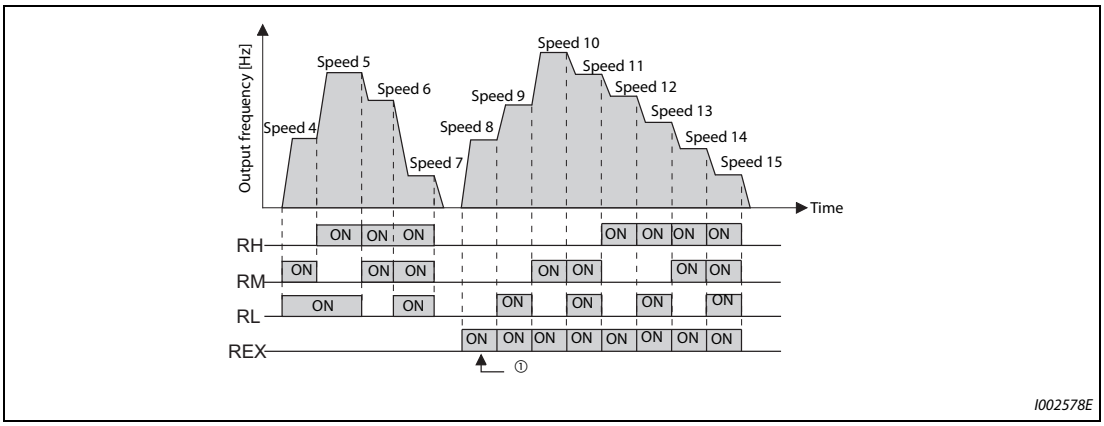


***Fig. 5-114:*** *Multi-speed selection by external terminals*

① When RH, RM and RL is set to OFF and REX is set to ON when "9999" is set to Pr. 232 "Multi-speed setting (speed 8)", the inverter runs by the frequency set to Pr. 6.

**Input compensation of multi-speed setting (Pr. 28)**

Speed (frequency) compensation can be applied for the multi-speed setting and the remote setting by inputting the frequency setting compensation signal (terminals 1, 2).

**NOTES**

The priority of the frequency commands by the external signals are "Jog operation > multi-speed operation > terminal 4 analog input > pulse train input > terminal 2 analog input". (For details on frequency commands by analog input, refer to page 5-388.)

Valid in the External operation mode or PU/External combined operation mode (Pr. 79 = "3" or "4").

Multi-speed parameters can also be set during PU operation or External operation.

The Pr. 24 to Pr. 27 and Pr. 232 to Pr. 239 settings have no priority among them.

When Pr. 59 "Remote function selection" ≠ "0", the multi-speed setting is invalid since the RH, RM, and RL signals are for remote setting.

When performing analog input compensation, set Pr. 28 "Multi-speed input compensation selection" to "1".

Select the terminals (terminals 1, 2) to use for compensation input voltage (0 to ± 5 V, 0 to ± 10 V) at Pr. 73 "Analog input selection".

When using terminal 1 for compensation input, set Pr. 868 "Terminal 1 function assignment" to "0" (initial value).

Changing the terminal assignment using Pr. 178 to Pr. 189 (input terminal function selection) may affect the other functions. Set parameters after confirming the function of each terminal.

| Parameters referred to | | | |
|---|---|---|---|
| Pr. 15 | Jog frequency | => | page 5-278 |
| Pr. 59 | Remote function selection | => | page 5-239 |
| Pr. 73 | Analog input selection | => | page 5-376 |
| Pr. 79 | Operation mode selection | => | page 5-255 |
| Pr. 178 to Pr. 189 | (input terminal function selection) | => | page 5-409 |
| Pr. 868 | Terminal 1 function assignment | => | page 5-381 |

# 5.10 (H) Protective function parameter

| Purpose | Parameter to set | | | Refer to page |
|---|---|---|---|---|
| To protect the motor from overheating | Electronic thermal O/L relay | P.H000, P.H006, P.H010, P.H016, P.H020 | Pr. 9, Pr. 51, Pr. 561, Pr. 607, Pr. 608 | 5-284 |
| To set the overheat protection characteristics for the motor | Free thermal O/L relay setting | P.H001 to P.H005, P.H011 to P.H015 | Pr. 600 to Pr. 604, Pr. 692 to Pr. 696 | 5-291 |
| To decelerate and stop when the motor thermal protection is activated | Fault definition | P.H030 | Pr. 875 | 5-292 |
| To extend the life of the cooling fan | Cooling fan operation selection | P.H100 | Pr. 244 | 5-293 |
| To detect ground fault at start | Ground fault at start enable/disable | P.H101 | Pr. 249 | 5-294 |
| To vary the operating level of the undervoltage protective function | Undervoltage level | P.H102 | Pr. 598 | 5-294 |
| To initiate an inverter protective function | Fault initiation | P.H103 | Pr. 997 | 5-295 |
| To disable the I/O phase loss protective function | I/O phase loss protection selection | P.H200, P.H201 | Pr. 251, Pr. 872 | 5-296 |
| To restart using the retry function when the protective function is activated | Retry operation | P.H300 to P.H303 | Pr. 65, Pr. 67 to Pr. 69 | 5-297 |
| To set the upper and lower limits of the output frequency | Maximum/minimum frequency | P.H400 to P.H402 | Pr. 1, Pr. 2, Pr. 18 | 5-300 |
| To prevent the motor from overspeeding under torque control | Speed limit | P.H410 to P.H412 | Pr. 807 to Pr. 809 | 5-133 |
| To avoid overdriving the motor during speed control | Overdriving prevention | P.H415 to P.H417 | Pr. 265, Pr. 853, Pr. 873 | 5-115 |
| To operate by avoiding resonance points | Frequency jump | P.H420 to P.H425, P.H429 | Pr. 31 to Pr. 36, Pr. 552 | 5-302 |
| To limit the output current so that the inverter protective function does not activate | Stall prevention | P.H500, P.H501, P.H600 to P.H603, P.H610, P.H611, P.H620, P.H621, P.H631, P.M430, P.T010, P.T040 | Pr. 22, Pr. 23, Pr. 48, Pr. 49, Pr. 66, Pr. 114, Pr. 115, Pr. 148, Pr. 149, Pr. 154, Pr. 156, Pr. 157, Pr. 858, Pr. 868 | 5-304 |
| To limit the torque during speed control | Torque limit | P.H500, P.H700 to P.H703, P.H710, P.H720, P.H721, P.H730, P.T010, P.T040,P. G210 | Pr. 22, Pr. 803, Pr. 810, Pr. 812 to Pr. 817, Pr. 858, Pr. 868, Pr. 874 | 5-83 |
| To shut off the output during acceleration | Overspeed detection level | P.H800 | Pr. 374 | 5-312 |
| To shut off the output when deceleration is not possible | Deceleration check | P.H880 | Pr. 690 | 5-115 |

## 5.10.1 Motor overheat protection (electronic thermal O/L relay)

Set the current of the electronic thermal O/L relay function to protect the motor from overheating. Such settings will provide the optimum protective characteristic considering the low cooling capability of the motor during low-speed operation.

| Pr. | Name | Initial value | Setting range | Description |
|---|---|---|---|---|
| 9<br>H000 | Electronic thermal O/L relay | Rated inverter current ① | 0 to 500 A ②<br>0 to 3600 A ③ | Set the rated motor current. |
| 600<br>H001 | First free thermal reduction frequency 1 | 9999 | 0 to 590 Hz<br>9999 | The electronic thermal O/L relay operation level can be changed to match the motor temperature characteristics with the combination of these three points (Pr. 600, Pr. 601), (Pr. 602, Pr. 603), (Pr. 604, Pr. 9).<br>9999: Free thermal O/L relay invalid |
| 601<br>H002 | First free thermal reduction ratio 1 | 100% | 1 to 100%<br>9999 | |
| 602<br>H003 | First free thermal reduction frequency 2 | 9999 | 0 to 590 Hz<br>9999 | |
| 603<br>H004 | First free thermal reduction ratio 2 | 100% | 1 to 100%<br>9999 | |
| 604<br>H005 | First free thermal reduction frequency 3 | 9999 | 0 to 590 Hz<br>9999 | |
| 607<br>H006 | Motor permissible load level | 150% | 110 to 150% | Set the permissible load according to the motor characteristics. |
| 51<br>H010 | Second electronic thermal O/L relay | 9999 | 0 to 500 A ②<br>0 to 3600 A ③ | Enabled when the RT signal is ON.<br>Set the rated motor current. |
| | | | 9999 | Second electronic thermal O/L relay invalid |
| 692<br>H011 | Second free thermal reduction frequency 1 | 9999 | 0 to 590 Hz<br>9999 | The electronic thermal O/L relay operation level can be changed to match the second motor temperature characteristics with the combination of these three points (Pr. 692, Pr. 693), (Pr. 694, Pr. 695), (Pr. 696, Pr. 51).<br>9999: Second free thermal O/L relay invalid |
| 693<br>H012 | Second free thermal reduction ratio 1 | 100% | 1 to 100%<br>9999 | |
| 694<br>H013 | Second free thermal reduction frequency 2 | 9999 | 0 to 590 Hz<br>9999 | |
| 695<br>H014 | Second free thermal reduction ratio 2 | 100% | 1 to 100%<br>9999 | |
| 696<br>H015 | Second free thermal reduction frequency 3 | 9999 | 0 to 590 Hz<br>9999 | |
| 608<br>H016 | Second motor permissible load level | 9999 | 110 to 150% | Set the permissible load when the RT signal is ON. |
| | | | 9999 | The Pr.607 setting is applied even when the RT signal is ON. |
| 561<br>H020 | PTC thermistor protection level | 9999 | 0.5 to 30 kΩ | Set the PTC thermistor protection level (resistance). |
| | | | 9999 | PTC thermistor protection disabled |

① For FR-A820-00077(0.75K) or lower and FR-A840-00038(0.75K) or lower, the current is set to 85% of the rated current.

② The setting range for FR-A820-03160(55K) or lower and FR-A840-01800(55K) or lower. The minimum setting increment is "0.01 A".

③ The setting range for FR-A820-03800(75K) or higher, and FR-A840-02160(75K) or higher. The minimum setting increment is "0.1 A".

**Electronic thermal O/L relay operation characteristic for induction motor (Pr. 9, E.THM)**

- This function detects the overload (overheat) of the motor and trips the inverter by stopping the operation of the transistor at the inverter output side.
- Set the rated current (A) of the motor in Pr. 9. (If the motor has both 50 Hz and 60 Hz ratings and the Pr. 3 "Base frequency" is set to 60 Hz, set to 1.1 times the 60 Hz rated motor current.)
- Set "0" in Pr. 9 to avoid activating the electronic thermal O/L relay function; for example, when using an external thermal relay for the motor. (Note that the output transistor protection of the inverter is activated. (E.THT))
- When using the Mitsubishi constant-torque motor, set Pr. 71 "Applied motor" = "1, 13 to 16, 50, 53, 54". (This will set a 100% continuous torque characteristic in the low-speed range.)

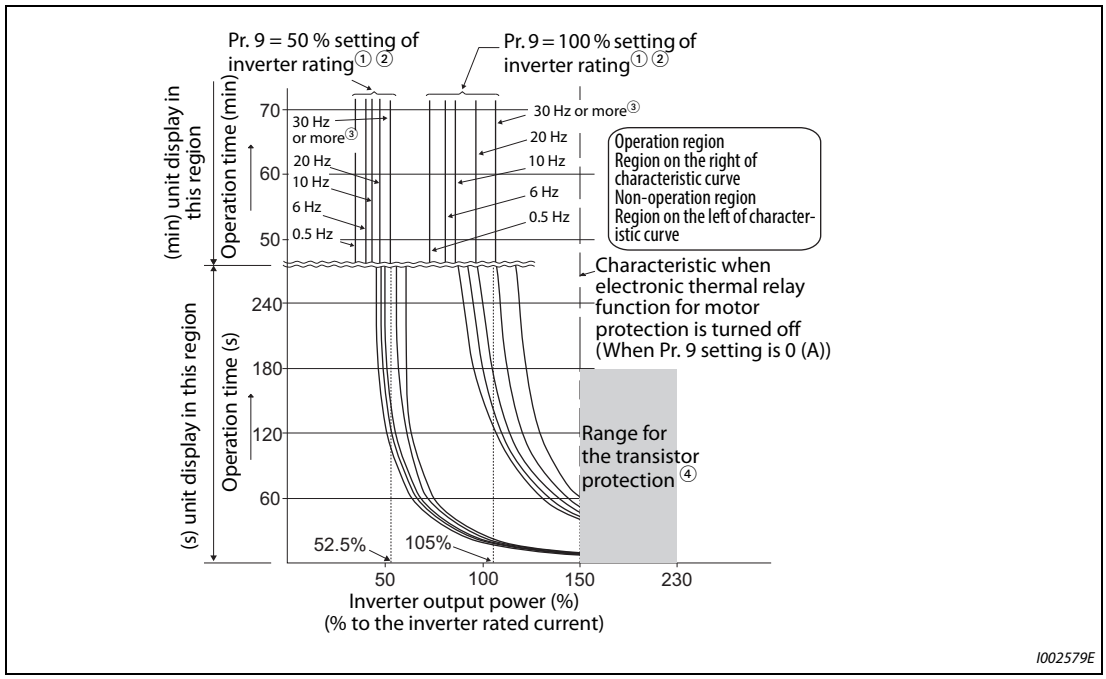


***Fig. 5-115:*** *Electronic thermal relay function operation characteristic*

① When setting Pr. 9 to a value (current value) of 50% of the inverter rated current

② The % value denotes the percentage to the rated inverter current. It is not the percentage to the rated motor current.

③ When the electronic thermal O/L relay of the Mitsubishi constant-torque motor is set, the characteristic curve is as shown in this diagram at 6 Hz or higher. (For selection of the operation characteristic , refer to page 5-421.)

④ Transistor protection is activated depending on the temperature of the heatsink. The protection may be activated even with less than 150% depending on the operating conditions.

**NOTES**

The internal accumulated heat value of the electronic thermal relay function is reset to the initial value by the inverter's power reset and reset signal input. Avoid unnecessary reset and power-OFF.

Install an external thermal relay (OCR) between the inverter and motors to operate several motors, a multi-pole motor or a dedicated motor with one inverter. When setting an external thermal relay, note that the current indicated on the motor rating plate is affected by the line-to-line leakage current. (Refer to page 3-1.) The cooling effect of the motor drops during low-speed operation. Use a thermal protector or a motor with built-in thermistor.

The protective characteristic of the electronic thermal O/L relay is degraded when there is a large difference in capacity between the inverter and motor, and when the set value is small. In such case, use an external thermal relay.

A dedicated motor cannot be protected by an electronic thermal O/L relay. Use an external thermal relay.

Set Pr. 9 = "0" for vector-control-dedicated motors (SF-V5RU) because they are equipped with thermal protectors.

If the electronic thermal O/L relay is set to 3% or lower of the rated inverter current, the electronic thermal O/L relay may not operate.

The transistor protection thermal O/L relay is activated early when the Pr. 72 "PWM frequency selection" is increased.

**Electronic thermal O/L relay when using IPM motor (Pr. 9, E.THM)**

- This function detects the overload (overheat) of the motor and trips the inverter by stopping the operation of the transistor at the inverter output side. (The operation characteristic is shown below.)
- Set the rated current (A) of the motor in Pr. 9. Performing IPM parameter initialization automatically sets the rated current of the IPM motor. (Refer to page 5-72.)
- Set "0" in Pr. 9 to avoid activating the electronic thermal O/L relay function; for example, when using an external thermal relay for the motor.
  (Note that the output transistor protection of the inverter is activated. (E.THT))

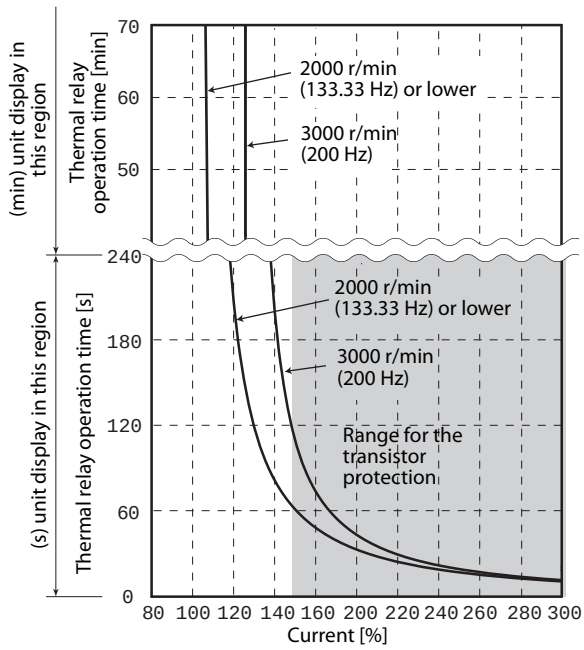


***Fig. 5-116:*** *Electronic thermal relay function operation characteristic (MM-CF)*

* The % value denotes the percentage to the rated motor current.
  – Protective function activated area: the area right of the characteristic curve
  – Normal operation area: the area left of the characteristic curve

**NOTES**

The internal accumulated heat value of the electronic thermal relay function is reset to the initial value by the inverter's power reset and reset signal input. Avoid unnecessary reset and power-OFF.

When using a PM motor other than MM-CF, set the free thermal parameters (Pr. 600 to Pr. 604) in accordance with the motor characteristic.

The transistor protection thermal O/L relay is activated early when the Pr. 72 "PWM frequency selection" is increased.

**Set two types of electronic thermal O/L relays (Pr. 51)**

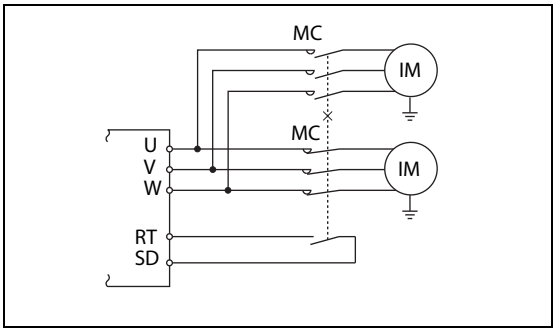


***Fig. 5-117:*** *Operating two motors by a single inverter*

- These settings are used when rotating two motors with different rated current separately by a single inverter. (When rotating two motors together, use an external thermal relay.)
- Set the rated motor current for the second motor in Pr. 51.
- When the RT signal is ON, thermal protection is provided based on the Pr. 51 setting.

| Pr. 450 "Second applied motor" | Pr. 9 "Electronic thermal O/L relay" | Pr. 51 "Second electronic thermal O/L relay" | RT-OFF | | RT-ON | |
|---|---|---|---|---|---|---|
| | | | No.1 Motor | No.2 Motor | No.1 motor | No.2 motor |
| 9999 | 0 | 9999 | × | × | × | × |
| | | 0 | × | × | × | × |
| | | 0.01 to 500 (0.1 to 3600) | × | Δ | × | ○ |
| 9999 | Other than 0 | 9999 | ○ | × | ○ | × |
| | | 0 | ○ | × | Δ | × |
| | | 0.01 to 500 (0.1 to 3600) | ○ | Δ | Δ | ○ |
| Other than 9999 | 0 | 9999 | × | × | × | × |
| | | 0 | × | × | × | × |
| | | 0.01 to 500 (0.1 to 3600) | × | Δ | × | ○ |
| Other than 9999 | Other than 0 | 9999 | ○ | Δ | Δ | ○ |
| | | 0 | ○ | × | Δ | × |
| | | 0.01 to 500 (0.1 to 3600) | ○ | Δ | Δ | ○ |

○: Values are accumulated by using the output current.
Δ: Values are accumulated by assuming the output current is "0 A" (cooling processing).
×: Electronic thermal O/L relay does not operate.

***Tab. 5-114:*** *Switching of the electronic thermal relay*

**NOTES**

The RT signal is a second function selection signal. The RT signal also enables other second functions. (Refer to page 5-415.)

The RT signal is assigned to the terminal RT in the initial setting. Set "3" in any of Pr. 178 to Pr. 189 (input terminal function selection), to assign the RT signal to another terminal.

### Motor permissible load level setting (Pr. 607, Pr. 608)

The electronic thermal O/L relay operation characteristic can be changed by setting the permissible load level according to the motor characteristics.

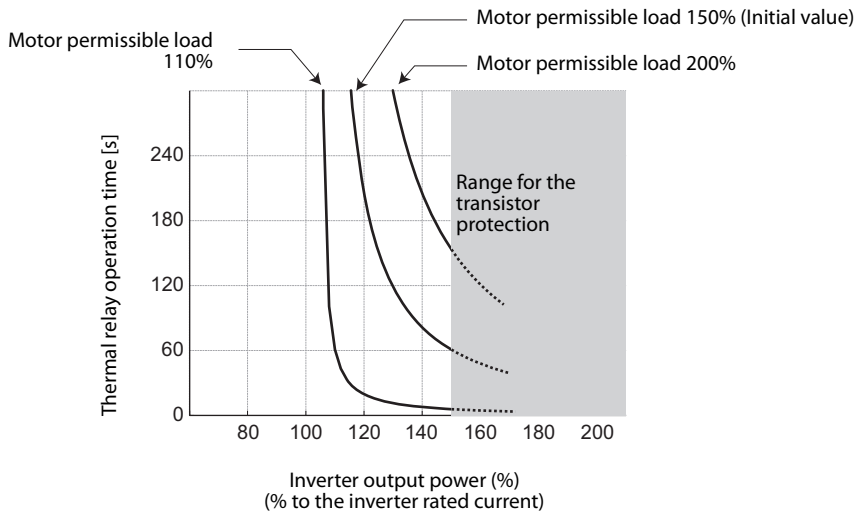


***Fig. 5-118:*** *Example of motor permissible load setting (when Pr. 9 = "100% of the inverter rating")*

### Electronic thermal O/L relay pre-alarm (TH) and warning signal (THP signal)

- If the accumulated electronic thermal value reaches 85% of the Pr. 9 or Pr. 51 setting, electronic thermal O/L relay function pre-alarm (TH) is displayed and the electronic thermal O/L relay pre-alarm (THP) signal is output. If the value reaches 100% of the Pr. 9 setting, the motor thermal protection (E.THM/E.THT) is activated to shut off the inverter output. The inverter output is not shut off with the TH display.
- The inverter output is not shut off with the warning signal (THP).
- For the terminal used for THP signal output, set "8 (positive logic)" or "108 (negative logic)" in any of Pr. 190 to Pr. 196 (output terminal function selection) to assign the function.

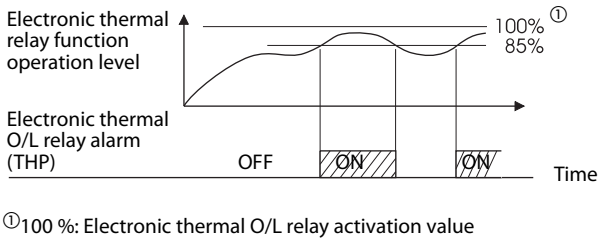


***Fig. 5-119:*** *Prealarm signal output*

**NOTE**

Changing the terminal assignment using Pr. 190 to Pr. 196 (output terminal function selection) may affect the other functions. Set parameters after confirming the function of each terminal.

**External thermal relay input (OH signal, E.OHT)**

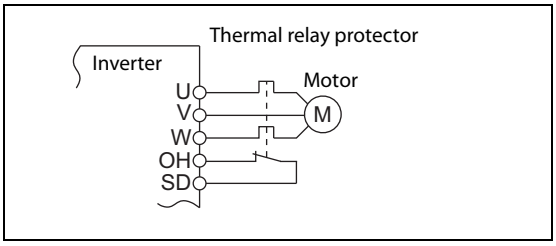


***Fig. 5-120:*** *Connection of an external thermal relay*

**External thermal relay input connection diagram**

- The external thermal relay input (OH) signal is used when using an external thermal relay or a thermal protector built into the motor to protect the motor from overheating.
- When the thermal relay function is activated, the external thermal operation (E.OHT) shuts off the inverter output.
- For the terminal used for the OH signal input, set "7" in any of Pr. 178 to Pr. 189 (input terminal function selection) to assign the function.
- Vector-control-dedicated motors (SF-V5RU) are equipped with thermal protectors.

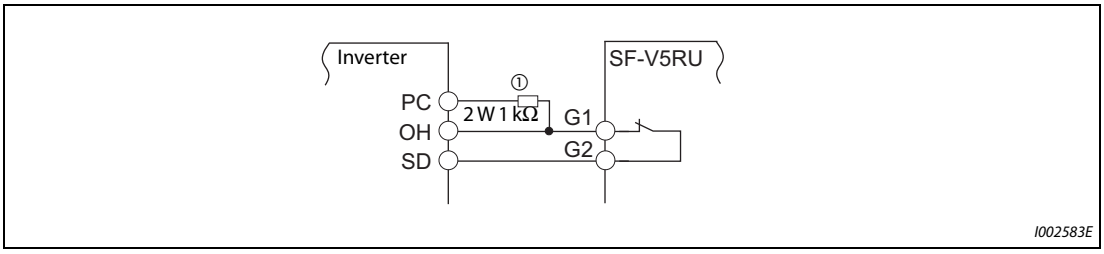


***Fig. 5-121:*** *Connecting the SF-V5RU thermal protector*

① Connect the recommended 2 W 1 kΩ resistor between the terminal PC and OH. (Refer to page 2-67.)

**NOTE**

Changing the terminal assignment using Pr. 178 to Pr. 189 (input terminal function selection) may affect the other functions. Set parameters after confirming the function of each terminal.

**PTC thermistor input (Pr. 561, E.PTC)**

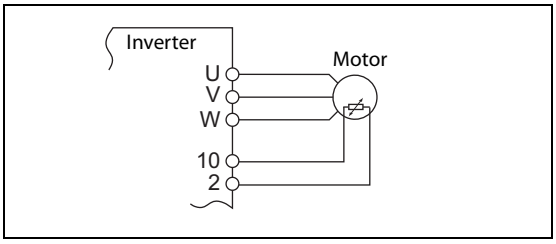


***Fig. 5-122:*** *PTC thermistor input connection diagram*

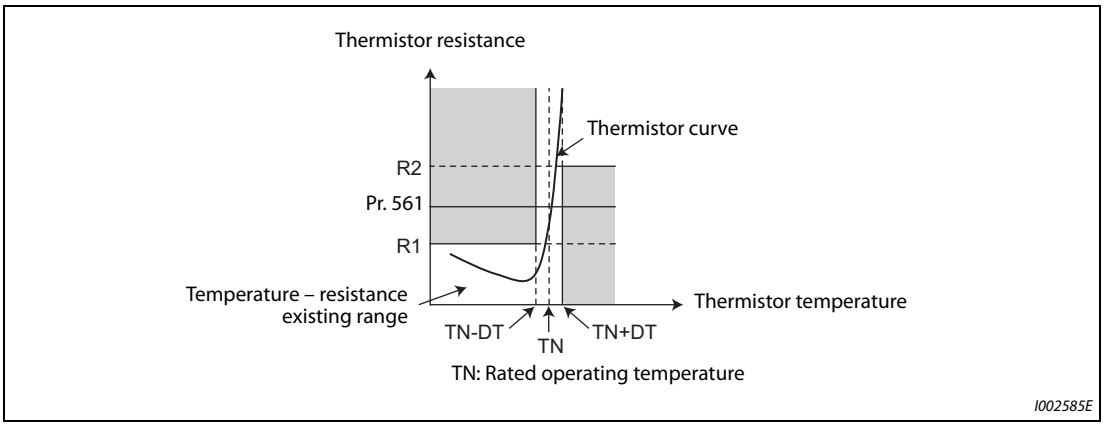


***Fig. 5-123:*** *Example of PTC thermistor characteristics*

- Output from the PTC thermistor, which is built into the motor, can be input to the terminals 2 and 10. If the input from the PTC thermistor reaches the resistor value set in Pr. 561 "PTC thermistor protection level", the PTC thermistor operation (E.PTC) shuts off the inverter output.
- Confirm the characteristic of the PTC thermistor to be used, and set the resistance for Pr. 561 around the center of the R1 and R2 values shown on the figure above so that it does not deviate from the protective function activating temperature TN. If the Pr. 561 setting becomes too close to R1 or R2, the protective function activating temperature may be too hot (protection is delayed), or too cold (too much protection).
- When the PTC thermistor protection is enabled (Pr. 561 ≠ "9999"), the resistance value for the PTC thermistor can be displayed on the operation panel (FR-DU08), parameter unit (FR-PU07) or via RS-485 communication. (Refer to page 5-317.)

**NOTES**

When using terminal 2 for PTC thermistor input (Pr. 561 ≠ "9999"), the terminal 2 will not operate as an analog frequency command terminal. The PID and dancer control functions assigned to the terminal 2 will be also disabled. Use Pr. 133 "PID action set point" to set the set point for the PID function.

To input power to the PTC thermistor power supply, always use the terminal 10. Do not use any other terminals or an external power supply Otherwise, the PTC thermistor protection (E.PTC) does not operate properly.

When E.PTC is activated, the alarm display, "External protection (AU terminal)", may appear on the parameter unit (FR-PU07), but it is not a fault.

**Overheat protection to match the characteristic of the motor (Pr. 600 to Pr. 604, Pr. 692 to Pr. 696)**

- The activation level of the electronic thermal O/L relay can be varied to match the motor temperature characteristic.
- The electronic thermal O/L relay's activation level can be set using the combination of three points (Pr. 600, Pr. 601), (Pr. 602, Pr. 603), (Pr. 604, Pr. 9). Two or more points are required for setting.
- The electronic thermal O/L relay's activation level can be set to using the combination of three points (Pr. 692, Pr. 693), (Pr. 694, Pr. 695), (Pr. 696, Pr. 51) when the RT signal is ON.

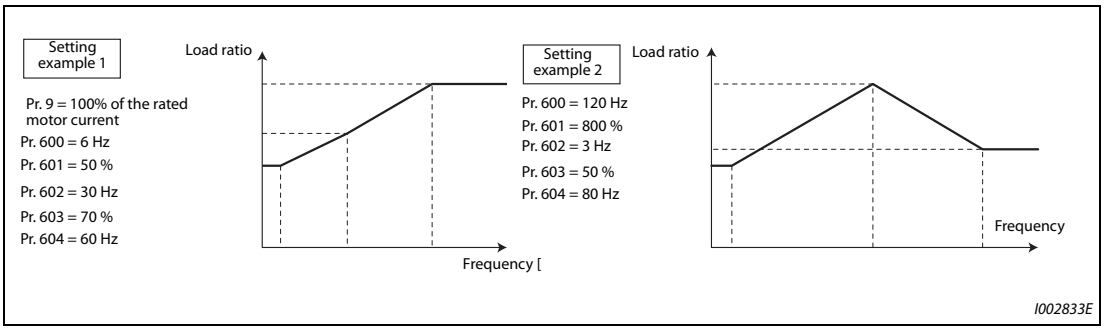


***Fig. 5-124:*** *Setting examples*

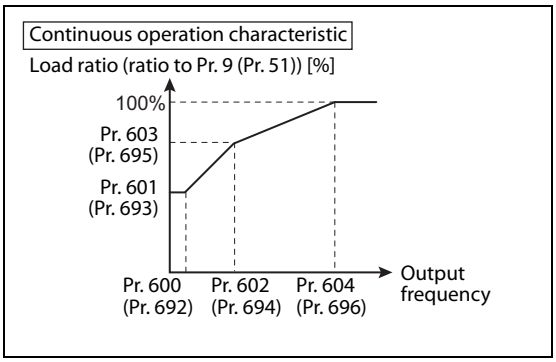


***Fig. 5-125:***
*Overheat protection setting*

- When setting Pr. 600, Pr. 602, Pr. 604 (Pr. 692, Pr. 694, Pr. 696) to the same frequency, the following graph's upper level will be applied.

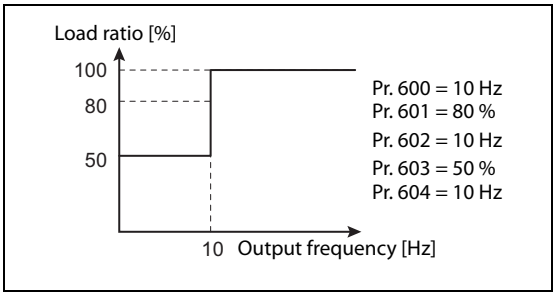


***Fig. 5-126:***
*Overheat protection setting example*

**NOTE** Make sure to set the parameters according to the motor temperature characteristic used.

| Parameters referred to | | | |
|---|---|---|---|
| Pr. 71 | Applied motor | => | page 5-421 |
| Pr. 72 | PWM frequency selection | => | page 5-211 |
| Pr. 178 to Pr. 189 | (input terminal function selection) | => | page 5-409 |
| Pr. 190 to Pr. 196 | (output terminal function selection) | => | page 5-350 |

## 5.10.2 Fault definition

Fault output can be done after deceleration stop when motor thermal protection is activated.

| Pr. | Name | Initial value | Setting range | Description |
|---|---|---|---|---|
| 875<br>H030 | Fault definition | 0 | 0 | Normal operation |
| | | | 1 | Decelerates to stop at activation of motor thermal protection. |

**Output shutoff at activation of any protective function (Pr. 875 = "0", initial value)**

At activation of a protective function, output is shut off, and the alarm output 2 signal (ER) and the fault signal (ALM) are output.

**Deceleration stop at motor thermal protection activation (Pr. 875 = "1")**

- At activation of the external thermal relay (E.OHT), motor load (electronic thermal O/L relay) (E.THM) and PTC thermistor (E.PTC) protective functions, the alarm output 2 (ER) signal is displayed, and the motor decelerates to stop. After it stops, a fault signal (ALM) is output.
- When the ER signal comes ON, reduce the load or take other measures to allow the inverter to decelerate.
- During fault occurrence aside from the E.OHT, E.THM and E.PTC, the output is immediately shut off, and the fault signal (ALM) is output.
- To use the ER signal, set "97 (positive logic)" or "197 (negative logic)" in any of Pr. 190 to Pr. 196 (output terminal function selection) to assign the function to the output terminal.

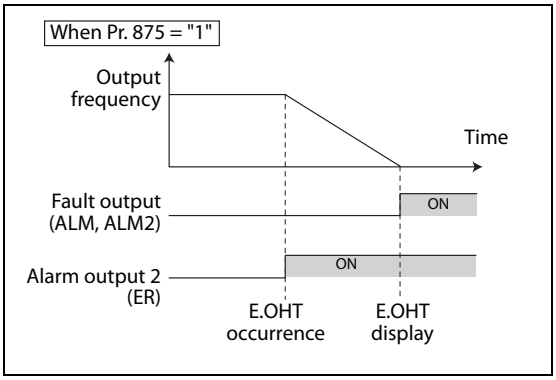


***Fig. 5-127:***
*Alarm output (Pr. 875 = 1)*

**NOTES**

Regardless of the Pr. 875 setting, when the protective function is operating during position control, output is immediately shut off. (No deceleration stop)

For systems with a large load-side torque that prevents deceleration, setting value "0" is recommended.

Changing the terminal assignment using Pr. 190 to Pr. 196 (output terminal function selection) may affect the other functions. Set parameters after confirming the function of each terminal.

## 5.10.3 Cooling fan operation selection

A cooling fan is built into the inverter and its operation can be controlled.

| Pr. | Name | Initial value | Setting range | Description |
|---|---|---|---|---|
| 244<br>H100 | Cooling fan operation selection | 1 | 0 | A cooling fan operates at power ON.<br>Cooling fan ON/OFF control is invalid.<br>(The cooling fan is always ON at power ON) |
| | | | 1 | Cooling fan ON/OFF control is valid.<br>The fan is always ON while the inverter is running.<br>During a stop, the inverter status is monitored and the fan switches ON/OFF according to the temperature. |
| | | | 101 to 105 | Cooling fan ON/OFF control is valid.<br>Set the cooling fan stop waiting time within 1 to 5 s. |

**Cooling fan always ON (Pr. 244 = "0")**

- When Pr. 244 = "0", the cooling fan operates at power ON. If the fan stops at this time, fan operation is regarded as faulty, Fan alarm FN [FN] is displayed on the operation panel, and the fan fault (FAN) and alarm (LF) signals are output.
- For the terminal used for the FAN signal output, set "25 (positive logic)" or "125 (negative logic)" in any of Pr. 190 to Pr. 196 (output terminal function selection). For the LF signal, set "98 (positive logic)" or "198 (negative logic)".

**Cooling fan operation control (Pr. 244 = "1" (initial value), "101 to 105")**

- The cooling fan operation is controlled when Pr. 244 = "1". When the inverter is running, the cooling fan operates; and when it is stopped, the cooling fan operates according to the temperature of the inverter heatsink. If the fan stops although it meets the conditions for running, fan operation is regarded as faulty, [FN] is displayed on the operation panel, and the fan signal and LF signals are output.
- To prevent the cooling fan from turning ON and OFF repeatedly during frequent starts/stops (inching), the cooling fan stop waiting time can be set. The waiting time when Pr. 244 = "101 to 105" is Pr. 244 – 100 (or 1 s, if the Pr. 244 = "101").

**Cooling fan operation command signal (Y206 signal)**

- The cooling fan operation command signal (Y206 signal) can be output when the inverter cooling fan meets the conditions for running. The function can be used when the fan installed on the enclosure is synchronized with the inverter cooling fan.
- Y206 signal indicates the operating command condition of the inverter cooling fan depending on the power supply ON/OFF or the Pr. 244 settings. The signal does not indicate the actual operation of the cooling fan. (The signal is output even if the cooling fan is stopped due to a fault.)
- To use the Y206 signal, set "206 (positive logic) or 306 (negative logic)" in one of Pr. 190 to Pr. 196 (output terminal function selection) to assign function to an output terminal.

**NOTES**

The cooling fan is installed on the FR-A820-00105(1.5K) or higher and FR-A840-00083(2.2K) or higher.

Changing the terminal assignment using Pr. 190 to Pr. 196 (output terminal function selection) may affect the other functions. Set parameters after confirming the function of each terminal.

| Parameters referred to | | | |
|---|---|---|---|
| Pr. 190 to Pr. 196 | (output terminal function selection) | => | page 5-350 |

## 5.10.4 Earth (ground) fault detection at start

Select whether to enable/disable earth (ground) fault detection at start. When enabled, earth (ground) fault detection is performed immediately after a start signal input to the inverter.

| Pr. | Name | Initial value | Setting range | Description |
|---|---|---|---|---|
| 249<br>H101 | Earth (ground) fault detection at start | 0 | 0 | Without the earth (ground) fault detection at start |
| | | | 1 | With the earth (ground) fault detection at start |

- If a ground fault is detected at start while Pr. 249 = "1", the output-side earth (ground) fault overcurrent (E.GF) is displayed and the outputs are shut off. (Refer to page 6-25.)
- The Pr. 249 setting is enabled during V/F control and Advanced magnetic flux vector control.
- When the Pr. 72 "PWM frequency selection" setting is high, enable the ground fault detection at start.

**NOTES**

Because of the detection performed at start, the output is delayed by approximately 20 ms at every start.

Use Pr. 249 to enable/disable ground fault detection at operation start. Ground faults are detected always during operation regardless of the Pr. 249 setting.

If a smaller-capacity motor is used with the FR-A820-00340(5.5K) or higher and FR-A840-00170(5.5K) or higher, ground fault protection may be insufficient.

## 5.10.5 Varying the activation level of the undervoltage protective function

If the undervoltage protection (E.UVT) activates due to unstable voltage in the power supply, the undervoltage level (DC bus voltage value) can be changed (only available for 400 V class).

| Pr. | Name | Initial value | Setting range | Description |
|---|---|---|---|---|
| 598<br>H102 | Undervoltage level | 9999 | 350 to 430 V DC | Set the DC voltage value at which E.UVT occurs. |
| | | | 9999 | E.UVT occurs at 430 V DC |

**NOTES**

Do not use this function when switching to an external battery, since the inrush current when power is restored increases, as the undervoltage level is decreased.

The Pr. 598 settings are only valid for 400 V class inverters.

The Pr. 598 setting is disabled during PM sensorless vector control. The Pr. 598 setting is also invalid during PM sensorless vector control for the first or second functions.

## 5.10.6 Initiating a protective function

A fault (protective function) is initiated by setting the parameter.

This function can be used to check how the system operates at activation of a protective function.

| Pr. | Name | Initial value | Setting range | Description |
|---|---|---|---|---|
| 997<br>H103 | Fault initiation | 9999 | 16 to 253 | The setting range is same with the one for fault data codes of the inverter (which can be read through communication).<br>Written data is not stored in EEPROM. |
| | | | 9999 | The read value is always "9999".<br>With this setting, the protective function does not activate. |

- To initiate a fault (protective function), set the assigned number of the protective function you want to initiate in Pr. 997.
- The value set in Pr. 997 is not stored in EEPROM.
- When a protective function activates, the inverter trips, a fault is displayed, and a fault signal (ALM, ALM2) is output.
- The latest fault in the faults history is displayed while the fault initiation function is in operation. After a reset, the faults history goes back to the previous status. (The protective function generated by the fault is not saved in the faults history.)
- Perform inverter reset to cancel the protective function.
- For the selectable parameter by Pr. 997 and the corresponding protective functions, refer to page 6-9.

**NOTES**

If a protective function is already operating, no fault can be activated by Pr. 997.

The retry function is disabled when a protective function has been initiated by the fault initiation function.

If a fault occurs after a protective function has been activated, the protective function indication does not change. The fault is not saved in the faults history either.

## 5.10.7 I/O phase loss protection selection

The output phase loss protection function, which stops the inverter output if one of the three phases (U, V, W) on the inverter's output side (load side) is lost, can be disabled.

The input phase loss protective function on the inverter input side (R/L1, S/L2, T/L3) can be enabled.

| Pr. | Name | Initial value | Setting range | Description |
|---|---|---|---|---|
| 251<br>H200 | Output phase loss protection selection | 1 | 0 | Without output phase loss protection |
| | | | 1 | With output phase loss protection |
| 872<br>H201 ① | Input phase loss protection selection | 0 | 0 | Without input phase loss protection |
| | | | 1 | With input phase loss protection |

① The setting is available only for standard models and IP55 compatible models.

**Output phase loss protection selection (Pr. 251)**

- When Pr. 251 = "0", output phase loss (E.LF) protection is disabled.

**Input phase loss protection selection (Pr. 872) (Standard models and IP55 compatible models)**

When Pr. 872 = "1", input phase loss (E.ILF) protection will be activated if one of three phases is detected to be lost for 1 s continuously.

**NOTES**

When several motors are connected, output phase loss cannot be detected even if the wiring to one motor loses phase.

If an input phase is lost while Pr. 872 = "1" (with input phase loss protection), Pr. 261 "Power failure stop selection" ≠ "0" (power failure stop function enabled), the motor decelerates to stop without outputting E.ILF.

In the case of R/L1, S/L2 phase loss, the input phase loss protection will not operate, and the inverter will trip.

If an input phase loss continues for a long time, the converter section and capacitor lives of the inverter will be shorter.

| Parameters referred to | | | |
|---|---|---|---|
| Pr. 261 | Power failure stop selection | => | page 5-558 |

## 5.10.8 Retry function

This function allows the inverter to reset itself and restart at activation of the protective function (fault indication). The retry generating protective functions can be also selected.

When the automatic restart after instantaneous power failure function is selected (Pr. 57 "Restart coasting time" ≠ 9999), the restart operation is also performed after a retry operation as well as after an instantaneous power failure. (Refer to page page 5-540 and page 5-549 for the restart operation.)

| Pr. | Name | Initial value | Setting range | Description |
|---|---|---|---|---|
| 65<br>H300 | Retry selection | 0 | 0 to 5 | A retry-making fault can be selected.<br>(Refer to tab. 5-116 on page 5-298.) |
| 67<br>H301 | Number of retries at fault occurrence | 0 | 0 | No retry function |
| | | | 1 to 10 | Set the number of retries at a fault occurrence.<br>A fault output is not provided during the retry operation. |
| | | | 101 to 110 | Set the number of retries at a fault occurrence.<br>(The setting value minus 100 is the number of retries.)<br>A fault output is provided during the retry operation. |
| 68<br>H302 | Retry waiting time | 1 s | 0.1 to 600 s | Set the waiting time from a fault occurrence to a retry. |
| 69<br>H303 | Retry count display erase | 0 | 0 | Clears the number of successful restarts made by retries. |

**Setting the retry function (Pr. 67, Pr. 68)**

- When the inverter protective function is operating (fault indication), the retry function automatically cancels (resets) the protective function after the time set in Pr. 68. The retry function then restarts the operation from the starting frequency.
- Retry operation is enabled when Pr. 67 ≠ "0". For Pr. 67, set the number of retries at activation of the protective function.

| Pr. 67 setting | Fault output during retry operation | Retry count |
|---|---|---|
| 0 | — | No retry function |
| 1 to 10 | Not provided | 1 to 10 times |
| 101 to 110 | Provided | 1 to 10 times |

***Tab. 5-115:*** *Setting the retry function parameters*

- When retries fail consecutively more than the number of times set in Pr. 67, a retry count excess (E.RET) occurs, resulting in an inverter retries. (Refer to the retry failure example.)
- Use Pr. 68 to set the waiting time from a protective function activation to a retry in the range of 0.1 to 600 s.
- During retry operation, the during retry (Y64) signal is ON. For the Y64 signal, set "64 (positive operation)" or "164 (negative operation)" in any of Pr. 190 to Pr. 196 (output terminal function selection) to assign the function.

### Retry count check (Pr. 69)

- Reading the Pr. 69 value provides the cumulative number of successful restart times made by retries. The cumulative count in Pr. 69 increases by 1 when a retry is successful. Retry is regarded as successful when normal operation continues without a fault for the Pr. 68 setting multiplied by four or longer (3.1 s at the shortest). (When retry is successful, the cumulative number of retry failures is cleared.)
- Writing "0" in Pr. 69 clears the cumulative count.

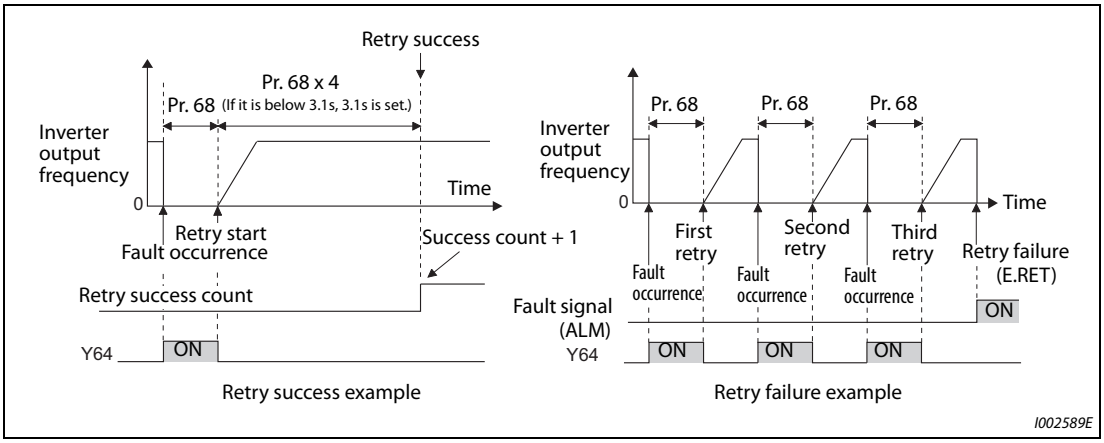


***Fig. 5-128:*** *Retry success and retry failure example*

### Selecting retry generating faults (Pr. 65)

Using Pr. 65, you can select the fault that will cause a retry. No retry will be made for the fault not indicated. (For the fault details, refer to page 6-9.)
"●" indicates the faults selected for retry.

| Retry generating fault | Pr. 65 setting | | | | | |
|---|---|---|---|---|---|---|
| | 0 | 1 | 2 | 3 | 4 | 5 |
| E.OC1 | ● | ● | | ● | ● | ● |
| E.OC2 | ● | ● | | ● | ● | |
| E.OC3 | ● | ● | | ● | ● | ● |
| E.OV1 | ● | | ● | ● | ● | |
| E.OV2 | ● | | ● | ● | ● | |
| E.OV3 | ● | | ● | ● | ● | |
| E.THM | ● | | | | | |
| E.THT | ● | | | | | |
| E.IPF | ● | | | | ● | |
| E.UVT | ● | | | | ● | |
| E. BE | ● | | | | ● | |
| E. GF | ● | | | | ● | |
| E.OHT | ● | | | | | |
| E.OLT | ● | | | | ● | |
| E.OPT | ● | | | | ● | |
| E.OP3 | ● | | | | ● | |
| E. PE | ● | | | | ● | |
| E.MB1 | ● | | | | ● | |

| Retry generating fault | Pr. 65 setting | | | | | |
|---|---|---|---|---|---|---|
| | 0 | 1 | 2 | 3 | 4 | 5 |
| E.MB2 | ● | | | | ● | |
| E.MB3 | ● | | | | ● | |
| E.MB4 | ● | | | | ● | |
| E.MB5 | ● | | | | ● | |
| E.MB6 | ● | | | | ● | |
| E.MB7 | ● | | | | ● | |
| E.OS | ● | | | | ● | |
| E.OSD | ● | | | | ● | |
| E.PTC | ● | | | | | |
| E.CDO | ● | | | | ● | |
| E.SER | ● | | | | ● | |
| E.USB | ● | | | | ● | |
| E.ILF | ● | | | | ● | |
| E.PID | ● | | | | ● | |
| E.PCH | ● | | | | ● | |
| E.SOT | ● | ● | | ● | ● | ● |
| E.LCI | ● | | | | ● | |

***Tab. 5-116:*** *Errors selected for retry*

**NOTES**

Use the retry function only when the operation can be resumed after resetting a protective function activation. Making a retry against the protective function, which is activated by an unknown condition, will lead the inverter and motor to be faulty. Identify in what condition the protective function was activated, and eliminate such condition before resuming the operation.

If the retry function operates during PU operations, the operating conditions (forward/reverse rotation) are stored; and operations resume after retry reset.

Only the fault details for the first fault that occurred are stored in the faults history.

The reset by the retry function does not clear the accumulated data of the electronic thermal O/L relay, regenerative brake duty, etc. (This is different from power supply reset or reset by RES signal.)

When the parameter storage device fault (E.PE) is occurring and reading of the retry-function-related parameters is not possible, retry cannot operated.

Changing the terminal assignment using Pr. 190 to Pr. 196 (output terminal function selection) may affect the other functions. Set parameters after confirming the function of each terminal.

**CAUTION:**

***When the retry function is set enabled, stay away from the motor and machine in the case of an inverter trip. The motor and machine will start suddenly (after the reset time has elapsed) after the inverter trip. When the retry function is set enabled, apply in easily visible places the CAUTION stickers supplied to this product.***

| Parameters referred to | | | |
|---|---|---|---|
| Pr. 57 | Restart coasting time | => | page 5-540, page 5-549 |

## 5.10.9 Limiting the output frequency (maximum/minimum frequency)

Motor speed can be limited. Clamp the output frequency at the upper and lower limits.

| Pr. | Name | Initial value | Setting range | Description |
|---|---|---|---|---|
| 1<br>H400 | Maximum frequency | 120 Hz ①<br>60 Hz ② | 0 to 120 Hz | Set the upper limit of the output frequency. |
| 2<br>H401 | Minimum frequency | 0 Hz | 0 to 120 Hz | Set the lower limit of the output frequency. |
| 18<br>H402 | High speed maximum frequency | 120 Hz ①<br>60 Hz ② | 0 to 590 Hz | Set when operating at 120 Hz or higher. |

① For the FR-A820-03160(55K)or lower and FR-A840-01800(55K) or lower.

② For the FR-A820-03800(75K)or higher and FR-A840-02160(75K) or higher.

**Setting the maximum frequency (Pr. 1, Pr. 18)**

- Set Pr. 1 "Maximum frequency" to the upper limit of the output frequency. If the value of the frequency command entered is higher than the setting, the output frequency is clamped at the maximum frequency.
- To operate at a frequency higher than the 120 Hz, adjust the upper output frequency limit with Pr. 18 "High speed maximum frequency". (When setting a frequency in Pr. 18, the Pr. 1 setting automatically changes to the frequency set in Pr. 18. Also, when setting a frequency in Pr. 1, the Pr. 18 setting automatically changes to the frequency set in Pr. 1.)

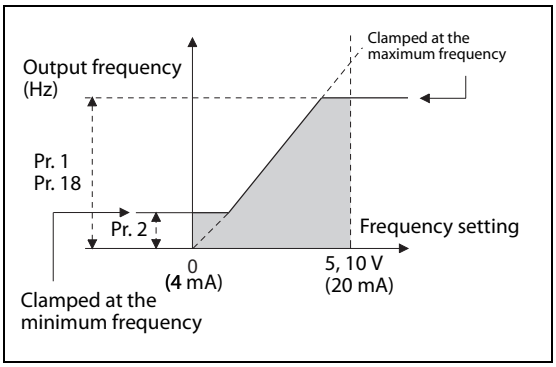


***Fig. 5-129:***
*Maximum and minimum output frequency*

I002590E

**Setting the minimum frequency (Pr. 2)**

- Set Pr. 2 "Minimum frequency" to the lower limit of the output frequency.
- If the set frequency is Pr. 2 or less, the output frequency is clamped at Pr. 2 (will not fall below Pr. 2).

**NOTES**

To operate with a frequency higher than 60 Hz using frequency-setting analog signals, change the Pr. 125 (Pr. 126) (frequency setting gain) setting. Simply changing the Pr. 1 and Pr. 18 settings does not enable operation at a frequency higher than 60 Hz.

During Real sensorless vector control, vector control, and PM sensorless vector control, the upper and lower limits are for the commanded frequency.

When Pr. 15 "Jog frequency" setting is equal to or less than Pr. 2 setting, the Pr. 15 setting has precedence over the Pr. 2 setting.

When stall prevention is activated to decrease the output frequency, the output frequency may drop to Pr. 2 or below.

If a jump frequency that exceeds Pr. 1 (Pr. 18) "Maximum frequency" is set for the 3-point jump, the maximum frequency setting is the set frequency. If the set frequency is less than the jump frequency Pr. 2 "Minimum frequency", the jump frequency is the set
frequency. (The set frequency can be equal to or lower than the frequency lower limit.)

**CAUTION:**

***When Pr. 13 "Starting frequency" is set to a value equal to or greater than Pr. 2, simply turning ON the start signal will run the motor at the preset speed in the preset acceleration time even if the frequency command frequency is not given. Take caution with this operation.***

| Parameters referred to | | | |
|---|---|---|---|
| Pr. 13 | Starting frequency | => | page 5-243, page 5-245 |
| Pr. 15 | Jog frequency | => | page 5-278 |
| Pr. 125 | Terminal 2 frequency setting gain frequency | => | page 5-388 |
| Pr. 126 | Terminal 4 frequency setting gain frequency | => | page 5-388 |

## 5.10.10 Avoiding the mechanical resonance points (frequency jump)

When it is desired to avoid resonance attributable to the natural frequency of a mechanical system, these parameters allow resonant frequencies to be jumped.

| Pr. | Name | Initial value | Setting range | Description |
|---|---|---|---|---|
| 31<br>H420 | Frequency jump 1A | 9999 | 0 to 590 Hz, 9999 | 1A to 1B, 2A to 2B, 3A to 3B are frequency jumps. (3-point jump)<br>9999: Function disabled |
| 32<br>H421 | Frequency jump 1B | | | |
| 33<br>H422 | Frequency jump 2A | | | |
| 34<br>H423 | Frequency jump 2B | | | |
| 35<br>H424 | Frequency jump 3A | | | |
| 36<br>H425 | Frequency jump 3B | | | |
| 552<br>H429 | Frequency jump range | 9999 | 0 to3 (0 Hz) | Set the jump range for the frequency jumps (6-point jump). |
| | | | 9999 | 3-point jump |

**3-point frequency jump (Pr. 31 to Pr. 36)**

- Up to three areas may be set, with the jump frequencies set to either the top or bottom point of each area.
- The settings of frequency jumps 1A, 2A, 3A are jump points, and operation is performed at these frequencies in the jump areas.

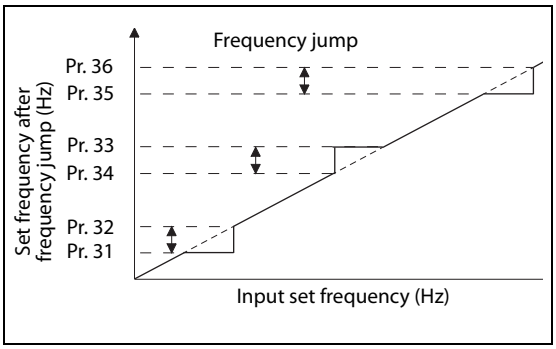


***Fig. 5-130:***
*Definition of the jump areas*

**Example ▽** Example 1:
To fix the frequency to 30 Hz in the range of 30 Hz to 35 Hz, set 35 Hz in Pr. 34 and 30 Hz in Pr. 33.

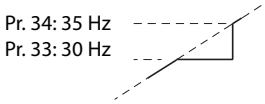


△

**Example ▽** Example 2:
To jump the frequency to 35 Hz in the range of 30 Hz to 35 Hz, set 35 Hz in Pr. 33 and 30 Hz in Pr. 34.

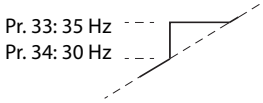


△

**6-point frequency jump (Pr. 552)**

- A total of six jump areas can be set by setting the common jump range for the frequencies set in Pr. 31 to Pr. 36.
- When frequency jump ranges overlap, the lower limit of the lower jump range and the upper limit of the upper jump range are used.
- When the set frequency decreases and falls within the jump range, the upper limit of the jump range is the set frequency. When the set frequency increases and falls within the jump range, the lower limit of the jump range is the set frequency.

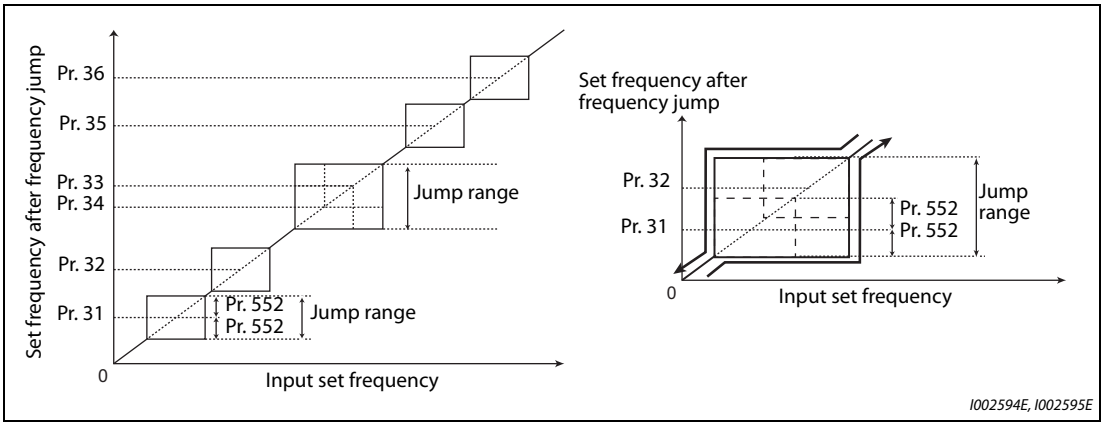


***Fig. 5-131:*** *6-point frequency jump*

**NOTES**

During acceleration/deceleration, the running frequency within the set area is valid.

If the setting ranges of individual groups (1A and 1B, 2A and 2B, 3A and 3B) overlap, write disable error (Er1) will occur.

Setting Pr. 552 = "0" disables frequency jumps.

If a jump frequency that exceeds Pr. 1 (Pr. 18) "Maximum frequency" is set for the 3-point jump, the maximum frequency setting is the set frequency. If the set frequency is less than the jump frequency Pr. 2 "Minimum frequency", the jump frequency is the set frequency. (The set frequency can be equal to or lower than the frequency lower limit.)
Example with 6-point frequency jump

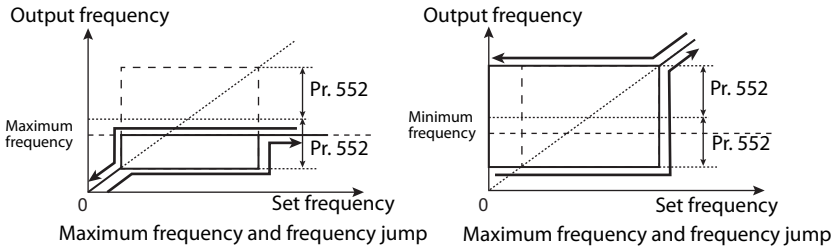


| Parameters referred to | | | |
|---|---|---|---|
| Pr. 1 | Maximum frequency | => | page 5-300 |
| Pr. 18 | High speed maximum frequency | => | page 5-300 |
| Pr. 2 | Minimum frequency | => | page 5-300 |

## 5.10.11 Stall prevention operation V/F Magnetic flux

This function monitors the output current and automatically changes the output frequency to prevent the inverter from tripping due to overcurrent, overvoltage, etc. It can also limit the stall prevention and fast-response current limit operation during acceleration/deceleration and power/regenerative driving.

This function is disabled during Real sensorless vector control, vector control and PM sensorless vector control.

- Stall prevention
  If the output current exceeds the stall prevention operation level, the output frequency of the inverter is automatically changed to reduce the output current.
  Also the second stall prevention function can limit the output frequency range in which the stall prevention function is enabled.
- Fast-response current limit
  If the current exceeds the limit value, the output of the inverter is shut off to prevent an overcurrent.

| Pr. | Name | Initial value FM | Initial value CA | Setting range | Description | |
|---|---|---|---|---|---|---|
| 22<br>H500 | Stall prevention operation level | 150% | | 0 | Stall prevention operation disabled. | |
| | | | | 0.1 to 400% ① | Set the current limit at which the stall prevention operation will start. | |
| 156<br>H501 | Stall prevention operation selection | 0 | | 0 to 31,<br>100 to 101 | Enable/disable the stall prevention operation and the fast-response current limit operation. | |
| 48<br>H600 | Second stall prevention operation level | 150% | | 0 | Second stall prevention operation disabled. | |
| | | | | 0.1 to 400% ① | The stall prevention operation level can be changed using the RT signal. | |
| 49<br>H601 | Second stall prevention operation frequency | 0Hz | | 0 | Second stall prevention operation disabled. | |
| | | | | 0.01 to 590 Hz | Set the frequency at which the Pr. 48 stall prevention operation will start. | |
| | | | | 9999 | Pr. 48 is enabled when RT signal is ON. | |
| 114<br>H602 | Third stall prevention operation level | 150% | | 0 | Third stall prevention operation disabled. | |
| | | | | 0.1 to 400% ① | The stall prevention operation level can be changed using the X9 signal. | |
| 115<br>H603 | Third stall prevention operation frequency | 0 Hz | | 0 | Third stall prevention operation disabled. | |
| | | | | 0.01 to 590 Hz | Set the frequency at which the stall prevention operation will start when the X9 signal turns ON. | |
| 23<br>H610 | Stall prevention operation level compensation factor at double speed | 9999 | | 0 to 200% | The stall operation level when running at high speeds above the rated frequency can be reduced. | |
| | | | | 9999 | Always Pr. 22. | |
| 66<br>H611 | Stall prevention operation reduction starting frequency | 60 Hz | 50 Hz | 0 to 590 Hz | Set the frequency at which the stall operation level reduction will start. | |
| 148<br>H620 | Stall prevention level at 0 V input | 150% | | 0 to 400% ① | The stall prevention operation level can be changed by the analog signal input to the terminal 1 (terminal 4). | |
| 149<br>H621 | Stall prevention level at 10 V input | 200% | | 0 to 400% ① | | |
| 154<br>H631 | Voltage reduction selection during stall prevention operation | 1 | | 0 | Output voltage reduction enabled. | Enable/disable the output voltage reduction during stall prevention operation. |
| | | | | 1 | Output voltage reduction disabled. | |
| | | | | 10 | Output voltage reduction enabled. | Use this setting when the overvoltage protective function (E.OV[ ]) activates during stall prevention operation in an application with large load inertia. |
| | | | | 11 | Output voltage reduction disabled. | |

| Pr. | Name | Initial value | | Setting range | Description |
|---|---|---|---|---|---|
| | | FM | CA | | |
| 157<br>M430 | OL signal output timer | 0s | | 0 to 25 s | Set the OL signal output start time when stall prevention is activated. |
| | | | | 9999 | No OL signal output. |
| 858<br>T040 | Terminal 4 function assignment | 0 | | 0, 1, 4, 9999 | When set "4", the stall prevention level can be changed with the signal to the terminal 4. |
| 868<br>T010 | Terminal 1 function assignment | 0 | | 0 to 6, 9999 | When set "4", the stall prevention level can be changed with the signal to the terminal 1. |

① The upper limit of stall prevention operation is limited internally to the following:
120% (SLD rating), 150% (LD rating), 220% (ND rating), or 280% (HD rating)

### Setting the stall prevention operation level (Pr. 22)

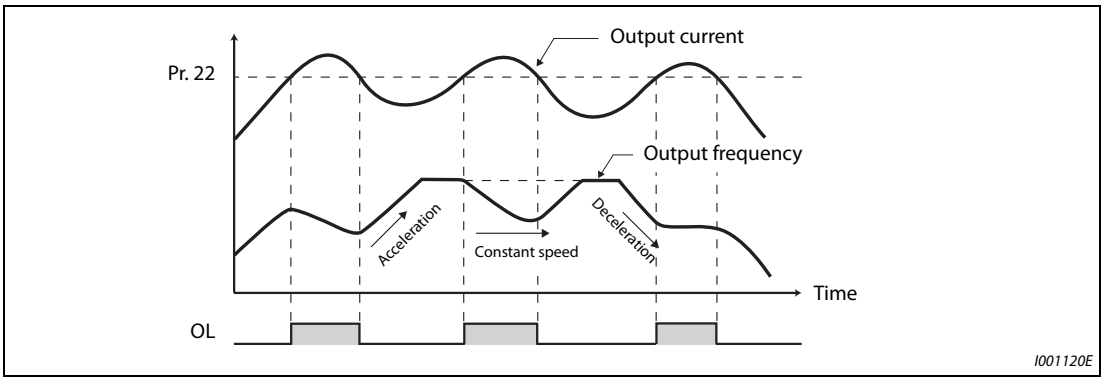


***Fig. 5-132:*** *Stall prevention operation example*

- For Pr. 22 "Stall prevention operation level", set the ratio of the output current to the inverter's rated current at which the stall prevention operation will be activated. Normally, this should be set at 150% (initial value).
- Stall prevention operation stops acceleration (makes deceleration) during acceleration, makes deceleration during constant speed, and stops deceleration during deceleration.
- When the stall prevention operation is performed, the Overload warning (OL) signal is output.

**NOTES**

A continuous overloaded condition may activate a protective function such as motor overload trip (electronic thermal O/L relay function) (E.THM).

When Pr. 156 has been set to activate the fast response current limit (initial value), the Pr. 22 setting should not be higher than 170%. Such setting will prevent torque generation

When Real sensorless vector control or vector control is selected using Pr. 800 "Control method selection", Pr. 22 serves as torque limit level.
For the FR-A820-00250(3.7K) or lower and FR-A840-00126(3.7K) or lower, the initial value of Pr. 22 is 200% instead of 150%.

### Disabling the stall prevention operation and fast-response current limit according to operating conditions (Pr. 156)

Referring to the table below, enable/disable the stall prevention operation and the fast-response current limit operation, and also set the operation at OL signal output.

| Pr. 156 setting | | Fast response current limit ○: enabled ●: disabled | Stall prevention operation selection ○: enabled ●: disabled | | | OL signal output ○: operation continued ●: operation stopped ① | Pr. 156 setting | | Fast response current limit ○: enabled ●: disabled | Stall prevention operation selection ○: enabled ●: disabled | | | OL signal output ○: operation continued ●: operation stopped ① |
|---|---|---|---|---|---|---|---|---|---|---|---|---|---|
| | | | Acceleration | Constant speed | Deceleration | | | | | Acceleration | Constant speed | Deceleration | |
| 0 (initial value) | | ○ | ○ | ○ | ○ | ○ | 16 | | ○ | ○ | ○ | ○ | ● |
| 1 | | ● | ○ | ○ | ○ | ○ | 17 | | ● | ○ | ○ | ○ | ● |
| 2 | | ○ | ● | ○ | ○ | ○ | 18 | | ○ | ● | ○ | ○ | ● |
| 3 | | ● | ● | ○ | ○ | ○ | 19 | | ● | ● | ○ | ○ | ● |
| 4 | | ○ | ○ | ● | ○ | ○ | 20 | | ○ | ○ | ● | ○ | ● |
| 5 | | ● | ○ | ● | ○ | ○ | 21 | | ● | ○ | ● | ○ | ● |
| 6 | | ○ | ● | ● | ○ | ○ | 22 | | ○ | ● | ● | ○ | ● |
| 7 | | ● | ● | ● | ○ | ○ | 23 | | ● | ● | ● | ○ | ● |
| 8 | | ○ | ○ | ○ | ● | ○ | 24 | | ○ | ○ | ○ | ● | ● |
| 9 | | ● | ○ | ○ | ● | ○ | 25 | | ● | ○ | ○ | ● | ● |
| 10 | | ○ | ● | ○ | ● | ○ | 26 | | ○ | ● | ○ | ● | ● |
| 11 | | ● | ● | ○ | ● | ○ | 27 | | ● | ● | ○ | ● | ● |
| 12 | | ○ | ○ | ● | ● | ○ | 28 | | ○ | ○ | ● | ● | ● |
| 13 | | ● | ○ | ● | ● | ○ | 29 | | ● | ○ | ● | ● | ● |
| 14 | | ○ | ● | ● | ● | ○ | 30 | | ○ | ● | ● | ● | ● |
| 15 | | ● | ● | ● | ● | —② | 31 | | ● | ● | ● | ● | —② |
| 100 ③ | Power driving | ○ | ○ | ○ | ○ | ○ | 101 ③ | Power driving | ● | ○ | ○ | ○ | ○ |
| | Regenerative driving | ● | ● | ● | ● | —② | | Regenerative driving | ● | ● | ● | ● | —② |

***Tab. 5-117:*** *Setting of parameter 156*

① When "operation stop at OL signal output" is selected, the fault output "E. OLT" (stop due to stall prevention) is displayed, and operation stops.

② The OL signal and E.OLT are not output because fast-response current limit and stall prevention are not operating.

③ Setting values "100, 101" can be individually set for power driving and regenerative driving. The setting value "101" disables the fast-response current limit during power driving.

**NOTES**

When the load is heavy or the acceleration/deceleration time is short, stall prevention operates and acceleration/deceleration may not be performed according to the time set. In such case, set the Pr. 156 and the stall prevention operation level to the optimum values.

For lift applications, make settings to disable the fast-response current limit. Otherwise, the torque may be insufficient, causing the load to drop.

**Adjusting the stall prevention operation signal output and output timing (OL signal, Pr. 157)**

- If the output current exceeds the stall prevention operation level and stall prevention is activated, Overload warning (OL) signal will turn ON for 100 ms or more. The output signal turns OFF when the output current falls to the stall prevention operation level or less.
- Pr. 157 "OL signal output timer" can set whether to output the OL signal immediately, or to output it after a certain time period.
- This function also operates during regeneration avoidance operation oL (overvoltage stall).

| Pr. 157 setting | Description |
|---|---|
| 0 (initial value) | Output immediately. |
| 0.1 to 25 | Output after the set time (s). |
| 9999 | Not output. |

***Tab. 5-118:*** *Setting of parameter 157*

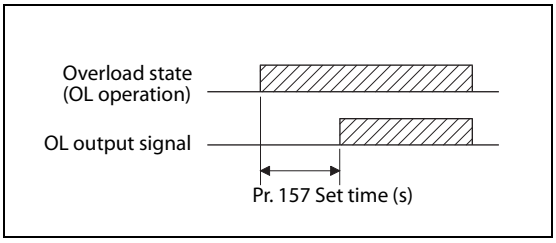


***Fig. 5-133:***
*Output of the OL signal*

**NOTES**

OL signal is assigned to the terminal OL in the initial status. The OL signal can be assigned to other terminals by setting "3 (positive logic) or 103 (negative logic)" in any of Pr. 190 to Pr. 196 (output terminal function selection).

If the stall prevention operation has lowered the output frequency to 0.5 Hz and kept the level for 3 s, the stall prevention stop (E.OLT) is activated to shut off the inverter output.

Changing the terminal assignment using Pr. 190 to Pr. 196 (output terminal function selection) may affect the other functions. Set parameters after confirming the function of each terminal.

**Setting for stall prevention operation in the high-frequency range (Pr. 22, Pr. 23, Pr. 66)**

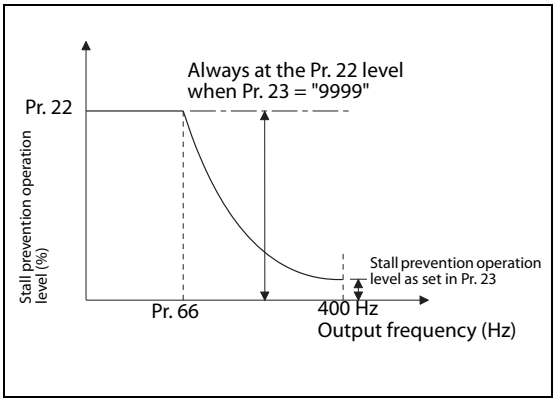


I002597E

***Fig. 5-134:***
*Stall prevention operation level*

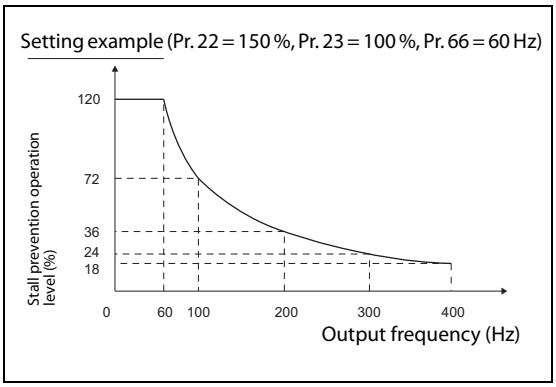


I002598E

***Fig. 5-135:***
*Stall prevention operation level when*
*Pr. 22 = 150 %, Pr. 23 = 100 % and Pr. 66 = 60 Hz*

- When operating at the rated motor frequency or higher, acceleration may not be made because the motor current does not increase. Also, when operating in the high-frequency range, the current flowing to the locked motor becomes less than the rated output current of the inverter; and even if the motor is stopped, the protective function will not operate (OL).
  In a case like this, the stall prevention level can be reduced in the high-frequency range to improve the motor's
  operating characteristics. This is useful when operating up to the high speed range, such as when using a centrifuge. Normally, set Pr. 66 "Stall prevention operation reduction starting frequency" to 60 Hz, and Pr. 23 "Stall prevention operation level compensation factor at double speed" to 100%.

- Calculation formula for stall prevention operation level

$$\text{Stall prevention operation level (\%) in the high-frequency range} = A + B \times \left[\frac{\text{Pr. 22} - A}{\text{Pr. 22} - B}\right] \times \left[\frac{\text{Pr. 23} - 100}{100}\right]$$

$$\text{Where } A = \frac{\text{Pr. 66 (Hz)} \times \text{Pr. 22 (\%)}}{\text{Output frequency (Hz)}}, \quad B = \frac{\text{Pr. 66 (Hz)} \times \text{Pr. 22 (\%)}}{\text{400 (Hz)}}$$

- When Pr. 23 = "9999" (initial value), the stall prevention operation level is constant at the Pr. 22 level up to 590 Hz.

**Setting multiple stall prevention operation levels (Pr. 48, Pr. 49, Pr. 114, Pr. 115)**

- By setting Pr. 49 "Second stall prevention operation frequency" = "9999" and turning ON the RT signal, Pr. 48 "Second stall prevention operation level" will be enabled.
- For Pr. 48 (Pr. 114), set the stall prevention operation level that is effective in the output frequency range between 0 Hz and Pr. 49 (Pr. 115). However, the operation level is Pr. 22 during acceleration.
- Stop-on-contact operation can be used by decreasing the Pr. 48 (Pr. 114) setting and loosening the reduction torque (torque when stopped).
- Pr. 114 and Pr. 115 are enabled when the X9 signal is ON. To input the X9 signal, set "9" in any of Pr. 178 to Pr. 189 (input terminal function selection) to assign the function to the terminal.

| Pr. 49 setting | Pr. 115 setting | Operation |
|---|---|---|
| 0 (initial value) | | The second (third) stall prevention function disabled. |
| 0.01 Hz to 590 Hz | | The second (third) stall prevention function operates according to the frequency. ① |
| 9999 ② | Setting not available | The second stall prevention function operates according to the RT signal.<br>RT signal ON: stall level Pr. 48<br>RT signal OFF: stall level Pr. 22 |

***Tab. 5-119:*** *Settings of parameter 49 and 115*

① For the stall prevention operation level, the smaller of Pr. 22 and Pr. 48 (Pr. 115) has precedence.

② When Pr. 858 = "4 (analog input to terminal 4 for stall prevention operation level)" or Pr. 868 = "4 (analog input to terminal 1 for stall prevention operation level)", turning ON the RT (X9) signal will not enable the second (third) stall prevention function. (Input to the terminal 4 or terminal 1 is valid.)

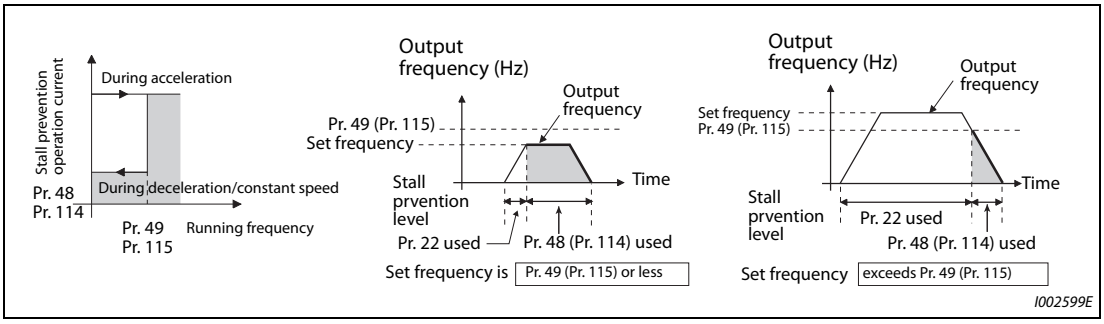


***Fig. 5-136:*** *Stall prevention operation level setting example*

**NOTES**

When Pr. 49 ≠ "9999" (level change according to frequency) and Pr. 48 = "0%", the stall prevention function will be disabled at or lower than the frequency set in Pr. 49.

The RT signal is assigned to the terminal RT in the initial status. Set "3" in any of Pr. 178 to Pr. 189 (input terminal function selection) to assign the RT signal to another terminal.

Changing the terminal assignment using Pr. 178 to Pr. 189 (input terminal function selection) may affect the other functions. Set parameters after confirming the function of each terminal.

The RT (X9) signal acts as the second (third) function selection signal and makes the other second (third) functions valid. (Refer to page 5-415.)

**Stall prevention operation level setting (analog variable) from terminal 1 (terminal 4) (Pr. 148, Pr. 149, Pr. 858, Pr. 868)**

- To use the terminal 1 (analog voltage input) to set the stall prevention operation level, set Pr. 868 "Terminal 1 function assignment" = "4". Then, input a 0 to 5 V (or 0 to 10 V) to the terminal 1. To choose whether 5 V or 10 V, use Pr. 73 "Analog input selection". In the initial status, Pr. 73 = "1 (initial value)" is set to choose 0 to ±10 V input.
- When setting the stall prevention operation level from terminal 4 (analog current input), set Pr. 858 "Terminal 4 function assignment" = "4".
- Input 0 to 20 mA into terminal 4. There is no need to turn ON the AU signal.
- Set Pr. 148 "Stall prevention level at 0 V input" to the current limit level when input voltage is 0 V (0 mA).
- Set Pr. 149 "Stall prevention level at 10 V input" to the current limit level when input voltage is 10 V/5 V (20 mA).

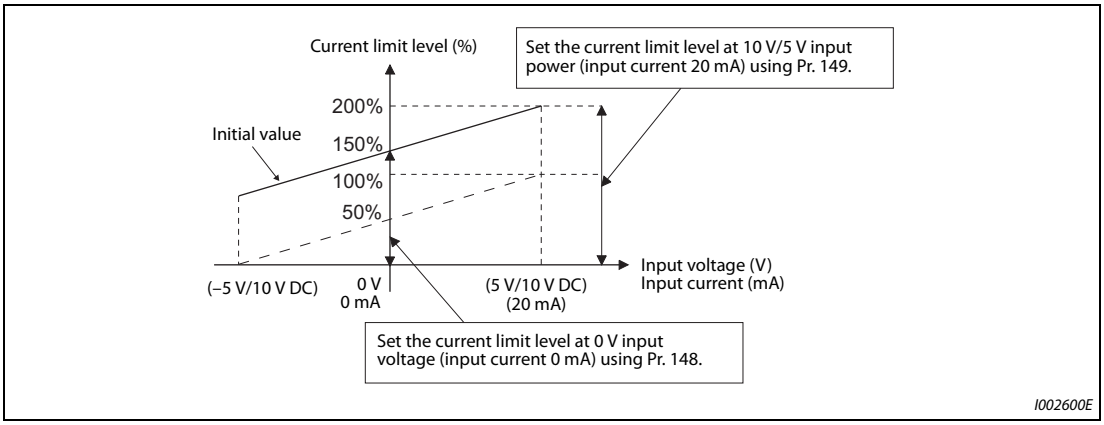


***Fig. 5-137:*** *Stall prevention operation level setting by terminal 1*

| Pr. 858 setting | Pr. 868 setting | V/F, Advanced magnetic flux vector control | |
|---|---|---|---|
| | | Terminal 4 function | Terminal 1 function |
| 0 (initial value) | 0 (initial value) | Frequency command (AU signal-ON) | Auxiliary frequency |
| | 1 | | — |
| | 2 | | — |
| | 3 | | — |
| | 4 ① | | Stall prevention |
| | 5 | | — |
| | 6 | | — |
| | 9999 | | — |
| 1 | 0 (initial value) | — | — |
| | 1 | | — |
| | 2 | | — |
| | 3 | | — |
| | 4 ① | | Stall prevention |
| | 5 | | — |
| | 6 | | — |
| | 9999 | | — |

***Tab. 5-120:*** *Functions of terminal 1 and 4 in dependence of the control mode (1)*

| Pr. 858 setting | Pr. 868 setting | V/F, Advanced magnetic flux vector control | |
|---|---|---|---|
| | | Terminal 4 function | Terminal 1 function |
| 4 ② | 0 (initial value) | Stall prevention | Auxiliary frequency |
| | 1 | | — |
| | 2 | | — |
| | 3 | — | — |
| | 4 ① | — ② | Stall prevention |
| | 5 | Stall prevention | — |
| | 6 | | — |
| | 9999 | | — |
| 9999 | — | — | — |

***Tab. 5-120:*** *Functions of terminal 1 and 4 in dependence of the control mode (2)*

① When Pr. 868 = "4" (analog stall prevention), the other functions for terminal 1 (auxiliary input, override function, PID control) will be disabled.

② When Pr. 858 = "4" (analog stall prevention), PID control and speed commands using terminal 4 will not operate, even if the AU signal turns ON.

③ When both of Pr. 858 and Pr. 868 are set to "4" (stall prevention), terminal 1 functions take priority and terminal 4 has no function.

**NOTE** The fast-response current limit cannot be set.

**To further prevent a trip (Pr. 154)**

- When Pr. 154 "Voltage reduction selection during stall prevention operation" = "0, 10", the output voltage is reduced. By making this setting, an overcurrent trip becomes less likely to occur. Use this setting when torque reduction does not pose a problem. (Under V/F control, the output voltage is reduced only during the stall prevention operation is activated.)
- Set Pr. 154 = "10, 11" when the overvoltage protective function (E.OV□) activates during stall prevention operation in an application with large load inertia. Note that turning OFF the start signal (STF/STR) or varying the frequency command during stall prevention operation may delay the acceleration/deceleration start.

| Pr. 154 | E.OC□ countermeasure | E.OV□ countermeasure |
|---|---|---|
| 0 | Effective | — |
| 1 (initial value) | — | — |
| 10 | Effective | Effective |
| 11 | — | Effective |

***Tab. 5-121:*** *Settings of parameter 154*

**CAUTION:**

- ***Do not set the stall prevention operation current too low.***
  ***Doing so will reduce the generated torque.***
- ***Be sure to perform a test run.***
  ***Stall prevention operation during acceleration may extend the acceleration time.***
  ***Stall prevention operation during constant-speed operation may cause sudden speed changes.***
  ***Stall prevention operation during deceleration may extend the deceleration time.***

| Parameters referred to | | | |
|---|---|---|---|
| Pr. 22 | Torque limit level | => | page 5-83 |
| Pr. 73 | Analog input selection | => | page 5-376 |
| Pr. 178 to Pr. 189 | (Input terminal function selection) | => | page 5-409 |
| Pr. 190 to Pr. 196 | (Output terminal function selection) | => | page 5-350 |
| Pr. 858 | Terminal 4 function assignment | => | page 5-381 |
| Pr. 868 | Terminal 1 function assignment | => | page 5-381 |

## 5.10.12 Motor overspeeding detection

The Overspeed occurrence (E.OS) is activated when the motor speed exceeds the overspeed detection level. This function prevents the motor from accidentally speeding over the specified value, due to an error in parameter setting, etc.

| Pr. | Name | Initial value | Setting range | Description |
|---|---|---|---|---|
| 374<br>H800 | Overspeed detection level | 9999 | 0 to 590 Hz | If the motor rotation speed exceeds the speed set in Pr. 374 during encoder feedback control, Real sensorless vector control, vector control or PM sensorless vector control, Overspeed occurrence (E.OS) occurs, the inverter output is shut off. |
| | | | 9999 | If the speed exceeds "the maximum speed (Pr. 1, Pr. 18) + 20 Hz" during encoder feedback control, Real sensorless vector control, or vector control, E.OS occurs.<br>During PM sensorless vector control, E.OS occurs when the speed exceeds "the motor maximum frequency + 10 Hz" ① |

① The motor maximum frequency is set in Pr. 702 "Maximum motor frequency." When Pr. 702 = "9999 (initial value)", the Pr. 84 "Rated motor frequency" setting is applied as the motor maximum frequency.

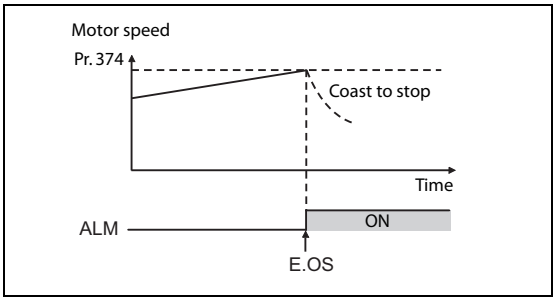


***Fig. 5-138:***
*Overspeed detection level and alarm occurrence*

**NOTE**

During encoder feedback control and vector control, the motor speed is compared against Pr. 374. During Real sensorless vector control and PM sensorless vector control, the output frequency is compared against Pr. 374.

# 5.11 (M) Monitor display and monitor output signal

| Purpose | Parameter to set | | | Refer to page |
|---|---|---|---|---|
| To display the motor speed.<br>To set by rotations per minute. | Speed display and rotations per minute setting | P.M000 to P.M002, P.D030 | Pr. 37, Pr. 144, Pr. 505, Pr. 811 | 5-314 |
| To change the monitored item on the operation panel and parameter unit | Operation panel monitored item selection, clearing the cumulative monitor | P.M020 to P.M023, P.M030, P.M031, P.M044, P.M050 to P.M052, P.M100 to P.M104 | Pr. 52, Pr. 170, Pr. 171, Pr. 268, Pr. 290, Pr. 563, Pr. 564, Pr. 774 to Pr. 776, Pr. 891, Pr. 992, Pr.1106 to Pr.1108 | 5-317 |
| To change the monitored item output from the terminal FM(CA) and AM | Terminal FM(CA) function selection | P.M040 to P.M042, P.M044, P.M300, P.M301, P.D100 | Pr. 54, Pr. 55, Pr. 56, Pr. 158, Pr. 290, Pr. 291, Pr. 866 | 5-330 |
| To adjusting the terminal FM, terminal CA, and AM output | Terminal FM(CA), AM calibration | P.M310, P.M320, P.M321, P.M330 to P.M334 | Pr. 867, Pr. 869, C0 (Pr. 900), C1 (Pr. 901), C8 (Pr. 930) to C11 (Pr. 931) | 5-337 |
| To check the effects of energy saving | Energy saving monitor | P.M023, P.M100, P.M200 to P.M207, P.M300, P.M301 | Pr. 52, Pr. 54, Pr. 158, Pr. 891 to Pr. 899 | 5-182 |
| To assign functions to the output terminals | Output terminal function assignment | P.M400 to P.M406, P.M431 | Pr. 190 to Pr. 196, Pr. 289 | 5-350 |
| To detect the output frequency | Up-to-frequency sensitivity<br>Output frequency detection<br>Low speed detection | P.M440 to P.M446 | Pr. 41 to Pr. 43, Pr. 50, Pr. 116, Pr. 865, Pr. 870 | 5-361 |
| To detect the output current | Output current detection<br>Zero current detection | P.M460 to P.M464 | Pr. 150 to Pr. 153, Pr. 166, Pr. 167 | 5-365 |
| To detecting the output torque | Output torque detection | P.M470 | Pr. 864 | 5-367 |
| To use the remote output function | Remote output | P.M500 to P.M502 | Pr. 495 to Pr. 497 | 5-368 |
| To use the analog remote output function | Analog remote output | P.M530 to P.M534 | Pr. 655 to Pr. 659 | 5-370 |
| To output the fault code from a terminal | Fault code output function | P.M510 | Pr. 76 | 5-373 |
| To detect the specified output power | Pulse train output of output power | P.M520 | Pr. 799 | 5-374 |
| To detect the control circuit temperature. | Control circuit temperature monitor | P.M060 | Pr. 663 | 5-375 |

## 5.11.1 Speed display and rotations per minute setting

The monitor display unit and the frequency setting on PU(FR-DU08/FR-PU07) can be switched to motor speed and machine speed.

| Pr. | Name | Initial value | | Setting range | Description | |
|---|---|---|---|---|---|---|
| | | FM | CA | | | |
| 37<br>M000 | Speed display | 0 | | 0 | Frequency display and setting | |
| | | | | 1 to 9998 ① | Set the machine speed for Pr. 505. | |
| 505<br>M001 | Speed setting reference | 60 Hz | 50 Hz | 1 to 590 Hz | Set the reference speed for Pr. 37. | |
| 144<br>M002 | Speed setting switchover | 4 | | 0, 2, 4, 6, 8, 10, 12, 102, 104, 106, 108, 110, 112 | Set the number of motor poles when displaying the motor speed. | |
| 811<br>D030 | Set resolution switchover | 0 | | | **Speed setting, running speed monitor increments on PU, RS-485 communication, communication options** | **Torque limit setting increments Pr. 22, Pr. 812 to Pr. 817** |
| | | | | 0 | 1 r/min | 0.1% |
| | | | | 1 | 0.1 r/min | |
| | | | | 10 | 1 r/min | 0.01% |
| | | | | 11 | 0.1 r/min | |

① The maximum value of the setting range differs according to the Pr. 1 "Maximum frequency", Pr. 505 "Speed setting reference", and it can be calculated from the following formula.

The maximum value of Pr. 37 < 65535 × Pr. 505 / Pr. 1 setting value (Hz).

The maximum setting value of Pr. 37 is 9998 if the result of the above formula exceeds 9998.

**Display in speed (Pr. 37, Pr. 144)**

- Set the number of motor poles (2, 4, 6, 8, 10, 12) for Pr. 144, or the number of motor poles + 100 (102, 104, 106, 108, 110, 112) to display the motor speed.
- The Pr. 144 setting will change automatically when setting the motor poles with Pr. 81 "Number of motor poles". Pr. 81 will not automatically change when Pr. 144 is changed.
- Example 1: Changing the initial value of Pr. 81 to "2" or "12" will change Pr. 144 from "4" to "2".
- Example 2: When setting Pr. 81 = "2" while Pr. 144 = "104", Pr. 144 will change from "104" to "102".

**Display in motor speed (Pr. 37, Pr. 505)**

- To display in the machine speed, set Pr. 37 to the machine speed at the frequency set in Pr. 505.
- For example, when Pr. 505 = "60 Hz" and Pr. 37 = "1000", the running speed monitor will display "1000" at the running speed of 60 Hz.When running frequency is 30 Hz, "500" is displayed.

**Changing the monitored value and speed setting increment (Pr. 811)**

- When Pr. 811 = "1 or 11", the speed setting for PU input and RS-485 communication, speed setting from communication option and the running speed monitor will be in increments of 0.1 r/min.
- For availability of changing the speed setting increments via communication options, refer to the Instruction Manual of each communication option.

**Monitor display (setting) increments**

- When both Pr. 37 and Pr. 144 have been set, their priorities are as given below.
  Pr. 144 = 102 to 112 > Pr. 37 = 1 to 9998 > Pr. 144 = 2 to 12
- The combination of the Pr. 37 and Pr. 144 settings as shown below determines the setting increment for each monitor. (The initial values are shown in grey shaded fields.)

| Pr. 37 Setting | Pr. 144 Setting | Output frequency monitor | Set frequency monitor | Running speed monitor | Frequency setting parameter setting |
|---|---|---|---|---|---|
| 0 (initial value) | 0 | 0.01 Hz | 0.01 Hz | 1 r/min ① ② | 0.01 Hz |
| | 2 to 12 | 0.01 Hz | 0.01 Hz | 1 r/min ① ② | 0.01 Hz |
| | 102 to 112 | 1 r/min ① ② | 1 r/min ① ② | 1 r/min ① ② | 1 r/min ① |
| 1 to 9998 | 0 | 0.01 Hz | 0.01 Hz | 1 (machine speed ①) | 0.01 Hz |
| | 2 to 12 | 1 (machine speed ①) | 1 (machine speed ①) | 1 (machine speed ①) | 1 (machine speed ①) |
| | 102 to 112 | 0.01 Hz | 0.01 Hz | 1 r/min ① ② | 0.01 Hz |

***Tab. 5-122:*** *Setting range of parameter 37 and 144*

① Motor speed r/min conversion formula: Frequency ×120 / Number of motor poles (Pr. 144)
Machine speed conversion formula: Pr. 37 × Frequency / Pr. 505
For Pr. 144 in the above formula, the value is "Pr. 144 – 100" when "102 to 112" is set in Pr. 144; and the value is "4" when Pr. 37 = 0 and Pr. 144 = 0.
Pr. 505 is always set as frequency (Hz).

② Use Pr. 811 to change the increment from 1 r/min to 0.1 r/min.

**NOTES**

The inverter's output frequency is displayed as synchronous speed under V/F control. The displayed value is "actual motor speed" + "motor slip." When Advanced magnetic flux vector control, Real sensorless vector control or PM sensorless vector control is selected, the actual motor speed (estimated value by motor slip calculation) is used. When the encoder feedback control or vector control is selected, the actual motor speed from the encoder is used.

When Pr. 37 = "0" and Pr. 144 = "0", the running speed monitor is displayed with the number of motor poles 4. (Displays 1800 r/min at 60 Hz)

To change the PU main monitor (PU main display), refer to Pr. 52.

If the setting increment is changed to 1 r/min (Pr. 811 = "0,10") after setting the running speed in 0.1 r/min (Pr. 811 = "1,11"), the 0.1 r/min increment may be dropped, in order for the rotations per minute resolution to change from 0.1 r/min to 0.3 r/min (when using four poles).

When using the machine speed display for the parameter unit (FR-PU07), do not change the speed with the up/down key if a set speed above 65535 is being displayed. The set speed may become an undetermined value.

When the FR-A8ND option is connected, the frequency display (setting) will be used regardless of the Pr. 37, Pr. 144 settings.

When Pr. 811 = "1 or 11" with the 0.1 r/min increment, the upper limit is as follows.
Speed command setting range: 6000 r/min for 2 to 10 motor poles, 5900 r/min for 12 motor poles
Running speed monitor such as the operation panel: 6553.5 r/min
Full scale of the running speed motor for analog output (terminals FM, CA and AM): 6000 r/min

**CAUTION:**

***Make sure to set the running speed and the number of motor poles.***
***Otherwise, the motor might run at extremely high speed, damaging the machine.***

| Parameters referred to | | | |
|---|---|---|---|
| Pr. 1 | Maximum frequency | => | page 5-300 |
| Pr. 22 | Torque limit level | => | page 5-83 |
| Pr. 52 | Operation panel main monitor selection | => | page 5-317 |
| Pr. 81 | Number of motor poles | => | page 5-55 |
| Pr. 800 | Control method selection | => | page 5-55 |
| Pr. 811 | Set resolution switchover | => | page 5-83 |

## 5.11.2 Monitor indicator selection using operation panel or via communication

The monitored item to be displayed on the operation panel (FR-DU08) or the parameter unit (FR-PU07) can be selected.

| Pr. | Name | Initial value | Setting range | Description |
|---|---|---|---|---|
| 52<br>M100 | Operation panel main monitor selection | 0<br>(output frequency) | 0, 5 to 14, 17 to 20, 22 to 35, 38, 40 to 45, 50 to 57, 61, 62, 64, 67, 87 to 98, 100 | Select the monitor to be displayed on the operation panel and parameter unit.<br>Refer to page 5-318 for the monitor description. |
| 774<br>M101 | Operation panel monitor selection 1 | 9999 | 1 to 3, 5 to 14, 17 to 20, 22 35, 38, 40 to 45, 50 to 57, 61, 62, 64, 67, 87 to 98, 100, 9999 | The output frequency, output current and output voltage monitor that are displayed in monitor mode on the operation panel and parameter unit can be switched to a specified monitor.<br>9999: Follows the Pr. 52 setting. |
| 775<br>M102 | Operation panel monitor selection 2 | | | |
| 776<br>M103 | Operation panel monitor selection 3 | | | |
| 992<br>M104 | Operation panel setting dial push monitor selection | 0<br>(Set frequency) | 0 to 3, 5 to 14, 17 to 20, 22 35, 38, 40 to 45, 50 to 57, 61, 62, 64, 67, 87 to 98, 100 | Select the monitor to be displayed when the setting dial on the operation panel is pushed. |
| 170<br>M020 | Watt-hour meter clear | 9999 | 0 | Set "0" to clear the watt-hour meter monitor. |
| | | | 10 | Set the maximum value for monitoring via communication. Set it in the range of 0 and 9999 kWh. |
| | | | 9999 | Set the maximum value for monitoring via communication. Set it in the range of 0 and 65535 kWh. |
| 563<br>M021 | Energization time carrying-over times | 0 | (0 to 65535)<br>(Read-only) | Displays the numbers of times that the cumulative energization time monitor exceeded 65535 h. Read-only. |
| 268<br>M022 | Monitor decimal digits selection | 9999 | 0 | Displays as integral value. |
| | | | 1 | Displays in 0.1 increments. |
| | | | 9999 | No function |
| 891<br>M023 | Cumulative power monitor digit shifted times | 9999 | 0 to 4 | Set the number of times to shift the cumulative power monitor digit.<br>The monitor value is clamped at the maximum value. |
| | | | 9999 | No shift<br>Monitor value is cleared when it exceeds the maximum value. |
| 171<br>M030 | Operation hour meter clear | 9999 | 0 | Set "0" to clear the operation hour monitor. |
| | | | 9999 | The read value is always 9999.<br>Nothing happens when "9999" is set. |
| 564<br>M031 | Operating time carrying-over times | 0 | (0 to 65535)<br>(Read-only) | Displays the numbers of times that the operating time monitor exceeded 65535 h. Read-only. |
| 290<br>M044 | Monitor negative output selection | 0 | 0 to 7 | Set the availability of output with a minus sign for the terminal AM, the operation panel display, or monitoring via communication.<br>(Refer to page 5-328.) |
| 1106<br>M050 | Torque monitor filter | 9999 | 0 to 5 s | The filter time constant is selectable for monitoring of the torque. A larger setting results in slower response. |
| | | | 9999 | 0.3 s filter |
| 1107<br>M051 | Running speed monitor filter | 9999 | 0 to 5 s | The filter time constant is selectable for monitoring of the running speed. A larger setting results in slower response. |
| | | | 9999 | 0.08 s filter |

| Pr. | Name | Initial value | Setting range | Description |
|---|---|---|---|---|
| 1108<br>M052 | Excitation current monitor filter | 9999 | 0 to 5 s | The filter time constant is selectable for monitoring of the motor excitation current. A larger setting results in slower response. |
| | | | 9999 | 0.3 s filter |

**Monitor description list (Pr. 52, Pr. 774 to Pr. 776, Pr. 992)**

- Set the monitor to be displayed on the operation panel (FR-DU08) and parameter unit (FR-PU07) in Pr. 52, Pr. 774 to Pr. 776, Pr. 992.
- Refer to the following table and set the monitor to be displayed. (The monitor marked — cannot be selected. "○" in the [Minus (-) display] indicates a display with a minus sign.)

| Types of monitor | Unit | Pr. 52, Pr. 774 to Pr. 776, Pr. 992 | | RS-485 communication dedicated monitor (hexadecimal) | Modbus-RTU real time monitor | Minus (-) display | Description |
|---|---|---|---|---|---|---|---|
| | | Operation panel | PU main monitor | | | | |
| Output frequency/ speed ⑰ | 0.01 Hz/1 ⑯ | 1/0/100 | | H01 | 40201 | | Displays the inverter output frequency. |
| Output current ⑥⑧⑰ | 0.01 A/ 0.1 A ⑤ | 2/0/100 | | H02 | 40202 | | Displays the inverter output current effective value. |
| Output voltage ⑥⑰ | 0.1 V | 3/0/100 | | H03 | 40203 | | Displays the inverter output voltage. |
| Fault display | — | 0/100 | | — | — | | Displays 8 past faults individually. |
| Frequency setting value/ speed setting | 0.01 Hz/1 ⑯ | 5 | ① | H05 | 40205 | | Displays the set frequency |
| Running speed | 1 (r/min) | 6 | ① | H06 | 40206 | | Displays the motor speed (by the Pr. 37, Pr. 144 settings). (Refer to page 5-314) The actual motor speed by encoder signal is used during encoder feedback control and vector control. |
| Motor torque | 0.1% | 7 | ① | H07 | 40207 | ○ | Displays motor torque as a percentage (0% under V/F control), considering the rated torque as 100%. |
| Converter output voltage ⑥ | 0.1 V | 8 | ① | H08 | 40208 | | Displays the DC bus voltage value. |
| Regenerative brake duty ⑦ | 0.1% | 9 | ① | H09 | 40209 | | Brake duty set in Pr. 30 and Pr. 70 |
| Electronic thermal O/L relay load factor | 0.1% | 10 | ① | H0A | 40210 | | Displays the motor thermal cumulative value, considering the thermal operation level as 100%. |
| Output current peak value ⑥ | 0.01 A/ 0.1 A ⑤ | 11 | ① | H0B | 40211 | | Saves and displays the output current monitor peak value. (Cleared with each start.) |
| Converter output voltage peak value ⑥ | 0.1 V | 12 | ① | H0C | 40212 | | Saves and displays the DC bus voltage peak value. (Cleared with each start.) |
| Input power | 0.01 kW/ 0.1 kW ⑤ | 13 | ① | H0D | 40213 | | Displays the power at the inverter input side. |
| Output power ⑧ | 0.01 kW/ 0.1 kW ⑤ | 14 | ① | H0E | 40214 | | Displays the power at the inverter output side. |

***Tab. 5-123:*** *Monitor description list (1)*

| Types of monitor | Unit | Pr. 52, Pr. 774 to Pr. 776, Pr. 992 | | RS-485 communication dedicated monitor (hexadecimal) | Modbus-RTU real time monitor | Minus (-) display | Description |
|---|---|---|---|---|---|---|---|
| | | Operation panel | PU main monitor | | | | |
| Load meter | 0.1% | 17 | | H11 | 40217 | | Displays torque current as a percentage, considering Pr. 56 setting value as 100% (motor rated torque is considered as 100% during Sensorless vector and vector control). |
| Motor excitation current ⑥ | 0.01 A/ 0.1 A ⑤ | 18 | | H12 | 40218 | | Displays the motor excitation current |
| Position pulse | — | 19 | | H13 | 40219 | | Displays the number of pulses per motor rotation during orientation control and position control. (Dedicated for FR-A8AP. Voltage monitor will appear when FR-A8AP is not connected.) |
| Cumulative energization time ② | 1 h | 20 | | H14 | 40220 | | Displays the cumulative energization time since the inverter shipment.<br>Check how many times the monitor value exceeded 65535 h with Pr. 563. |
| Orientation status ⑩ | 1 | 22 | | H16 | 40222 | | Displays values only when orientation control is enabled. (Voltage monitor will appear when FR-A8AP is not connected.) (Refer to page page 5-487) |
| Actual operation time ②③ | 1 h | 23 | | H17 | 40223 | | Displays the cumulative time since the inverter began running. The number of times the monitor value exceeded 65535 h can be checked with Pr. 564.<br>This can be cleared with Pr. 171. (Refer to page 5-327) |
| Motor load factor | 0.1% | 24 | | H18 | 40224 | | Displays the output current value as a percentage, considering the inverter rated current value as 100%.<br>Monitor value = output current monitor value / inverter rated current × 100 [%] |
| Cumulative power ⑥ | 0.01 kWh/ 0.1 kWh ④⑤ | 25 | | H19 | 40225 | | Displays the cumulative energy based on the output power monitor.<br>This can be cleared with Pr. 170. (Refer to page 5-327.) |
| Position command (lower digits) | 1 | 26 | | H1A | 40226 | ○ | Displays the position command (decimal) before the electronic gear is set. ⑨ |
| Position command (upper digits) | 1 | 27 | | H1B | 40227 | ○ | |
| Current position (lower digits) | 1 | 28 | | H1C | 40228 | ○ | Displays the value of the position feedback pulse after converting it into the number of pulses before the electronic gear is set. ⑨ |
| Current position (upper digits) | 1 | 29 | | H1D | 40229 | ○ | |
| Droop pulse (lower digits) | 1 | 30 | | H1E | 40230 | ○ | Displays the droop pulse before the electronic gear. ⑨ |
| Droop pulse (upper digits) | 1 | 31 | | H1F | 40231 | ○ | |
| Torque command | 0.1% | 32 | | H20 | 40232 | ○ | Displays the torque command value obtained from the vector control results. |
| Torque current command | 0.1% | 33 | | H21 | 40233 | ○ | Displays the commanded current for the torque. |

***Tab. 5-123:*** *Monitor description list (2)*

| Types of monitor | Unit | Pr. 52, Pr. 774 to Pr. 776, Pr. 992 | | RS-485 communication dedicated monitor (hexadecimal) | Modbus-RTU real time monitor | Minus (-) display | Description |
|---|---|---|---|---|---|---|---|
| | | Operation panel | PU main monitor | | | | |
| Motor output | 0.01 kW/ 0.1 kW ⑤ | 34 | | H22 | 40234 | | Multiplies the output torque at that time with the motor speed, and displays the machine output for the motor shaft end. |
| Feedback pulse ⑩ | — | 35 | | H23 | 40235 | | Display the number of pulses fed back from the encoder during one sampling (also displays during stop). (Voltage monitor will appear when FR-A8AP is not connected.)<br>The sampling time varies with the Pr. 369 "Number of encoder pulses setting".<br>1050 or less: 1 s<br>1051 to 2100: 0.5 s<br>2101 to 4096: 0.25 s |
| Trace status | 1 | 38 | | H26 | 40238 | | Displays the trace status. (Refer to page page 5-568) |
| PLC function user monitor 1 | According to the SD1215 setting | 40 | | H28 | 40240 | | Displays the arbitrary monitoring item using the PLC function.<br>Displays the following special register values.<br>SD1216: Displays in No. 40<br>SD1217: Displays in No. 41<br>SD1218: Displays in No. 42<br>(Refer to the FR-A800 PLC Function Programming Manual.) |
| PLC function user monitor 2 | | 41 | | H29 | 40241 | | |
| PLC function user monitor 3 | | 42 | | H2A | 40242 | | |
| Station number (RS-485 terminals) | 1 | 43 | | H2B | 40243 | | Displays which station number (0 to 31) can currently be used for communication from the RS-485 terminal block. |
| Station number (PU) | 1 | 44 | | H2C | 40244 | | Displays which station number (0 to 31) can currently be used for communication from the PU connector. |
| Station number (CC-Link) | 1 | 45 | | H2D | 40245 | | Displays which station number (0 to 31) can currently be used for CC-Link communication.<br>Displays "0" when the FR-A8NC is not connected. |
| Energy saving effect | Changeable by parameter setting. | 50 | | H32 | 40250 | | Displays the energy saving effect monitor.<br>Conversion to power saving, average power saving, price display, and percentage display can be done using parameters.<br>(Refer to page 5-182.) |
| Cumulative energy saving | | 51 | | H33 | 40251 | | |
| PID set point | 0.1% | 52 | | H34 | 40252 | | Displays the set point, measured value, and deviation under PID control.<br>(Refer to page page 5-516) |
| PID measured value | 0.1% | 53 | | H35 | 40253 | | |
| PID deviation | 0.1% | 54 | | H36 | 40254 | ○ | |
| Input terminal status | — | 55 | ① | H0F ⑪ | 40215 ⑪ | | Displays input terminal ON/OFF state of the inverter. (Refer to page 5-326 for DU display.) |
| Output terminal status | — | | ① | H10 ⑫ | 40216 ⑫ | | Displays output terminal ON/OFF state of the inverter. (Refer to page 5-326 for DU display.) |
| Option input terminal status ⑩ | — | 56 | — | — | — | | Displays input terminal ON/OFF state of the digital input option (FR-A8AX) on the DU.<br>(Refer to page 5-326 for details.) |

***Tab. 5-123:*** *Monitor description list (3)*

| Types of monitor | Unit | Pr. 52, Pr. 774 to Pr. 776, Pr. 992 | | RS-485 communication dedicated monitor (hexadecimal) | Modbus-RTU real time monitor | Minus (-) display | Description |
|---|---|---|---|---|---|---|---|
| | | Operation panel | PU main monitor | | | | |
| Option output terminal status ⑩ | — | 57 | — | — | — | | Displays output terminal ON/OFF state of the digital output option (FR-A8AY) and the relay output option (FR-A8AR) on the DU. (Refer to page 5-326 for details.) |
| Option input terminal status 1 (for communication) ⑩ | — | — | | H3A ⑬ | 40258 ⑬ | | Input terminal X0 to X15 ON/OFF state of the digital input option (FR-A8AX) can be monitored via RS-485 communication and the communication option. |
| Option input terminal status 2 (for communication) ⑩ | — | — | | H3B ⑭ | 40259 ⑭ | | Input terminal DY ON/OFF state of the digital input option (FR-A8AX) can be monitored via RS-485 communication and the communication option. |
| Option output terminal status 1 (for communication) ⑩ | — | — | | H3C ⑮ | 40260 ⑮ | | Output terminal ON/OFF state of the digital output option (FR-A8AY) and relay output option (FR-A8AR) can be monitored via RS-485 communication and the communication option. |
| Motor thermal load factor | 0.1% | 61 | | H3D | 40261 | | Displays the accumulated heat value of the motor thermal O/L relay. The motor overload trip (E.THM) occurs at 100%. |
| Inverter thermal load factor | 0.1% | 62 | | H3E | 40262 | | Displays the accumulated heat value of the inverter thermal O/L relay. The inverter overload trip (E.THT) occurs at 100%. |
| PTC thermistor resistance | 0.01 kΩ | 64 | | H40 | 40264 | | Displays the PTC thermistor resistance when Pr. 561 "PTC thermistor protection level" ≠ 9999 (voltage monitor when Pr. 561 = 9999). |
| PID measured value 2 | 0.1% | 67 | | H43 | 40267 | | Displays the PID control measured value even when PID control is disabled. (Refer to page page 5-516) |
| 32-bit cumulative power (lower 16 bits) | 1 kWh | × | | H4D | 40277 | | Displays the 32-bit cumulative power value in multiples of 16 bits. Monitoring can be performed via RS-485 communication and communication options. (To find the monitor codes for each communication option, refer to the Instruction Manual of each communication option.) |
| 32-bit cumulative power (upper 16 bits) | 1 kWh | × | | H4E | 40278 | | |
| 32-bit cumulative power (lower 16 bits) | 0.01 kWh/ 0.1 kWh ⑤ | × | | H4F | 40279 | | |
| 32-bit cumulative power (upper 16 bits) | 0.01 kWh/ 0.1 kWh ⑤ | × | | H50 | 40280 | | |
| Remote output value 1 | 0.1% | 87 | | H57 | 40287 | ○ | Displays the setting values of Pr. 656 to Pr. 659 (analog remote output). (Refer to page 5-370.) |
| Remote output value 2 | 0.1% | 88 | | H58 | 40288 | | |
| Remote output value 3 | 0.1% | 89 | | H59 | 40289 | | |
| Remote output value 4 | 0.1% | 90 | | H5A | 40290 | | |
| PID manipulated variable | 0.1% | 91 | | H5B | 40291 | ○ | Displays the PID control manipulated amount. (Refer to page 5-516) |

***Tab. 5-123:*** *Monitor description list (4)*

| Types of monitor | Unit | Pr. 52, Pr. 774 to Pr. 776, Pr. 992 | | RS-485 communication dedicated monitor (hexadecimal) | Modbus-RTU real time monitor | Minus (-) display | Description |
|---|---|---|---|---|---|---|---|
| | | Operation panel | PU main monitor | | | | |
| Second PID set point | 0.1% | 92 | | H5C | 40292 | | Displays the set point, measured value, and deviation under second PID control. (Refer to page 5-516) |
| Second PID measured value | 0.1% | 93 | | H5D | 40293 | | |
| Second PID deviation | 0.1% | 94 | | H5E | 40294 | ○ | |
| Second PID measured value 2 | 0.1% | 95 | | H5F | 40295 | | Displays the second PID control measured value even when the second PID control is disabled. (Refer to page 5-516) |
| Second PID manipulated variable | 0.1% | 96 | | H60 | 40296 | ○ | Displays the second PID control manipulated amount. (Refer to page 5-516) |
| Dancer main speed setting | 0.01 Hz | 97 | | H61 | 40297 | | Displays the main speed setting under step control. |
| Control circuit temperature | 1 °C | 98 | | H62 | 40298 | ○ | Displays the temperature of the control circuit board. Without minus sign: 0 to 100 °C With minus sign: –20 to 100 °C |

***Tab. 5-123:*** *Monitor description list (5)*

① Frequency setting to output terminal status on the PU main monitor is selected by "other monitor selection" of the parameter unit (FR-PU07).

② The cumulative energization time and actual operation time are accumulated from 0 to 65535 hours, then cleared, and accumulated again from 0.

③ The actual operation time does not increase if the cumulative running time before power OFF is less than an hour.

④ When using the parameter unit (FR-PU07), "kW" is displayed.

⑤ Differs according to capacities. (FR-A820-03160(55K) or lower, FR-A840-01800(55K) or lower / FR-A820-03800(75K) or higher, FR-A840-02160(75K) or higher)

⑥ Since the voltage and current display on the operation panel (FR-DU08) is shown in four digits, a monitor value of more than "9999" is displayed as "—".

⑦ The setting is available only for standard models.

⑧ When the output current is less than the specified current level (5% of the rated inverter current), the output current is monitored as 0 A. Therefore, the monitored value of an output current and output power may be displayed as "0" when using a much smaller-capacity motor compared to the inverter or in other instances that cause the output current to fall below the specified value.

⑨ Can be changed to the pulse display after the electronic gear using Pr. 430 "Pulse monitor selection".

⑩ Available when the plug-in option is connected.

⑪ Input terminal monitor details ("1" denotes terminal ON, "0" denotes terminal OFF, and "—" denotes undetermined value.)

| b15 | | | | | | | | | | | | | | | b0 |
|---|---|---|---|---|---|---|---|---|---|---|---|---|---|---|---|
| — | — | — | — | CS | RES | STP (STOP) | MRS | JOG | RH | RM | RL | RT | AU | STR | STF |

⑫ Output terminal monitor details ("1" denotes terminal ON, "0" denotes terminal OFF , and "—" denotes undetermined value.)

| b15 | | | | | | | | | | | | | | | b0 |
|---|---|---|---|---|---|---|---|---|---|---|---|---|---|---|---|
| — | — | — | — | — | — | — | — | SO | ABC2 | ABC1 | FU | OL | IPF | SU | RUN |

⑬ Option input terminal monitor 1 details (FR-A8AX input terminal status, "1" denotes terminal ON and "0" denotes terminal OFF.)
All are OFF when the option is not connected.

| b15 | | | | | | | | | | | | | | | b0 |
|---|---|---|---|---|---|---|---|---|---|---|---|---|---|---|---|
| X15 | X14 | X13 | X12 | X11 | X10 | X9 | X8 | X7 | X6 | X5 | X4 | X3 | X2 | X1 | X0 |

⑭ Option input terminal monitor 2 details (FR-A8AX input terminal status. "1" denotes terminal ON , "0" denotes terminal OFF, "—" denotes undetermined value.)
All are OFF when the option is not connected.

| b15 | | | | | | | | | | | | | | | b0 |
|---|---|---|---|---|---|---|---|---|---|---|---|---|---|---|---|
| — | — | — | — | — | — | — | — | — | — | — | — | — | — | — | DY |

⑮ Option output terminal monitor details (FR-A8AY/A8AR output terminal status. "1" denotes terminal ON, "1" denotes terminal OFF, and "—" denotes undetermined value.)
All are OFF when the option is not connected.

| b15 | | | | | | | | | | | | | | | b0 |
|---|---|---|---|---|---|---|---|---|---|---|---|---|---|---|---|
| — | — | — | — | — | — | RA3 | RA2 | RA1 | Y6 | Y5 | Y4 | Y3 | Y2 | Y1 | Y0 |

⑯ The increment is 1 when Pr. 37 = "1 to 9998" or when Pr. 144 = "2 to 12" or "102 to 112". (Refer to page 5-314.)

⑰ The monitored values are retained even if an inverter fault occurs. Resetting will clear the retained values.

**Monitor display for operation panel (Pr. 52, Pr. 774 to Pr. 776)**

- When Pr. 52 = "0" (initial value), the monitoring of output frequency, output current, output voltage and fault display can be selected in sequence by pressing the SET key.
- The Load meter, Motor excitation current and Motor load factor are displayed on the second monitor (output current) position, among the monitors set in Pr. 52. Other monitors are displayed in the third monitor (output voltage) position.
- The monitor displayed at power ON is the first monitor (the output frequency monitor, according to the initial value). Display the monitor that will be the first monitor, and continue pressing the SET key for 1 s. (To return to the output frequency monitor, display the output frequency monitor and press SET key for 1 s.)

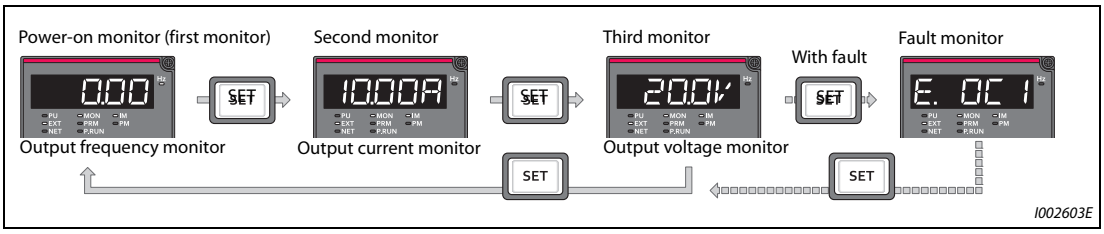


***Fig. 5-139:*** *Displaying various types of monitor*

- For example, when Pr. 52 = "20" (cumulative energization time), the monitor is displayed on the operation panel as shown below.

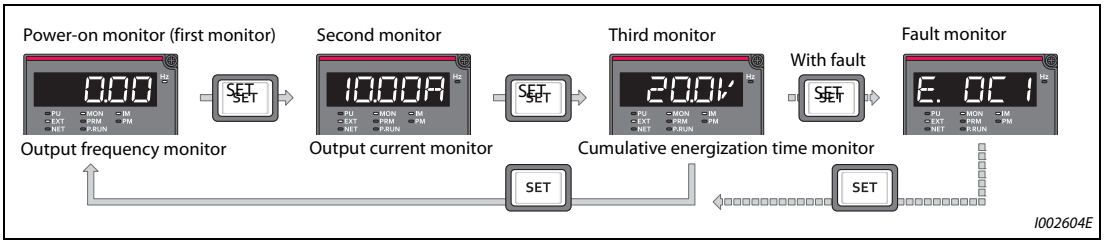


***Fig. 5-140:*** *Selection of the third monitor*

- Pr. 774 sets the output frequency monitor, Pr. 775 sets the output current monitor, and Pr. 776 sets the monitor
  description to be displayed at the output voltage monitor position. When Pr. 774 to Pr. 776 = "9999" (initial value), the Pr. 52 setting value is used.

**NOTE**

On the operation panel (FR-DU08), the "Hz" unit indicator is lit while displaying the output frequency, the "Hz" flickers when displaying the set frequency.

### Displaying the set frequency during stop (Pr. 52)

When Pr. 52 = "100", the set frequency is displayed during stop, and output frequency is displayed during running. (LED of Hz flickers during stop and is lit during operation.)

| Pr. 52 setting | Status | Output frequency | Output current | Output voltage | Fault or alarm indication |
|---|---|---|---|---|---|
| 0 | During running/ stop | Output frequency | Output current | Output voltage | Fault or alarm indication |
| 100 | During stop | Set frequency ① | | | |
| | Running | Output frequency | | | |

***Tab. 5-124:*** *Display during running and stop*

① Displays the frequency that is output when the start command is ON. The value considers the maximum/minimum frequency and frequency jumps. It is different from the frequency setting displayed when Pr. 52 = "5".

**NOTES**

During an error, the output frequency at error occurrence appears.

During output shutoff by the MRS signal, the values displayed are the same as during a stop.

During offline auto tuning, the tuning state monitor takes priority.

### Operation panel setting dial push display (Pr. 992)

- Use Pr. 992 to select the monitor that appears when the setting dial on the operation panel (FR-DU08) is pushed.
- When Pr. 992 = "0 (initial value)", keep pressing the setting dial when in PU operation mode or External/PU combined operation mode 1 (Pr. 79 "Operation mode selection" = "3") to show the presently set frequency.
- When Pr. 992 = "100", the set frequency is displayed during stop, and output frequency is displayed during running.

| Pr. 992 setting | Status | Monitor displayed by the setting dial push |
|---|---|---|
| 0 | During running/stop | Set frequency (PU direct-in frequency) |
| 100 | During stop | Set frequency ① |
| | Running | Output frequency |

***Tab. 5-125:*** *Display, when the setting dial is pushed*

① Displays the frequency that is output when the start command is ON. The value considers the maximum/minimum frequency and frequency jumps. It is different from the frequency setting displayed when Pr. 992 = "5".

**Operation panel (FR-DU08) I/O terminal monitor (Pr. 52)**

- When Pr. 52 = "55 to 57", the I/O terminal state can be monitored on the operation panel (FR-DU08).
- The output terminal monitor is displayed on the third monitor.
- The LED is ON when the terminal is ON, and the LED is OFF when the terminal is OFF. The center line of LED is always ON.

| Pr. 52 setting | Monitor description |
|---|---|
| 55 | Displays the I/O terminal ON/OFF state of the inverter. |
| 56 ① | Displays input terminal ON/OFF state of the digital input option (FR-A8AX) |
| 57 ① | Displays output terminal ON/OFF state of the digital output option (FR-A8AY) or the relay output option (FR-A8AR). |

***Tab. 5-126:*** *I/O terminal monitor*

① The setting values "56, 57" can be set even if the option is not installed. All are OFF when the option is not connected.

- On the I/O terminal monitor (Pr. 52 = "55"), the upper LEDs denote the input terminal state, and the lower LEDs denote the output terminal state.

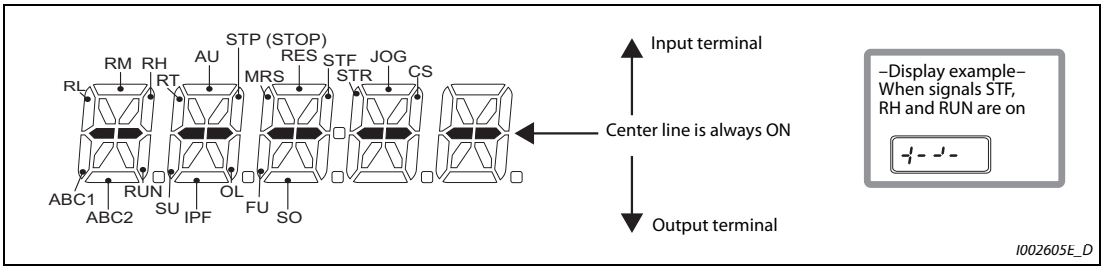


***Fig. 5-141:*** *Displaying the signal states of the I/O terminals*

- The decimal point of the first digit on the LED will light for the input option terminal monitor (Pr. 52 = "56").

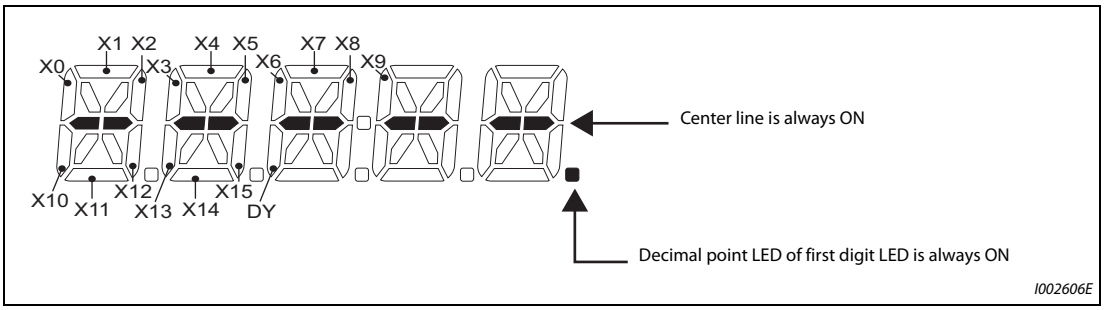


***Fig. 5-142:*** *Displaying the signal states when the input option is mounted*

- The decimal point of the second digit on the LED will light for the output option terminal monitor (Pr. 52 = "57").

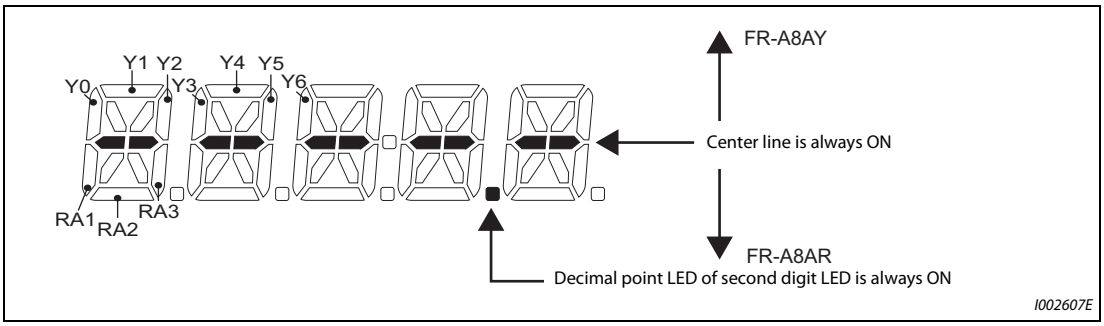


***Fig. 5-143:*** *Displaying the signal states when the output option is mounted*

**Cumulative power monitor and clear (Pr. 170, Pr. 891)**

- On the cumulative power monitor (Pr. 52 = "25"), the output power monitor value is added up and updated in 100 ms increments. (The values are saved in EEPROM every hour.)
- Display increments and display ranges of the operation panel (FR-DU08), parameter unit (FR-PU07) and communication (RS-485 communication, communication option) are as indicated below.

| Operation panel, parameter unit ① | | Communication | | |
|---|---|---|---|---|
| Range | Unit | Range | | Unit |
| | | Pr. 170 = 10 | Pr. 170 = 9999 | |
| 0 to 999.99 kWh | 0.01 kWh | 0 to 9999 kWh | 0 to 65535 kWh (initial value) | 1 kWh |
| 1000.0 to 9999.9 kWh | 0.1 kWh | | | |
| 10000 to 99999 kWh | 1 kWh | | | |

***Tab. 5-127:*** *Units and range of the cumulative energizing monitor*

① Power is measured in the range of 0 to 99999.99 kWh, and displayed in five digits.When the monitor value exceeds "999.99", a carry occurs, for example "1000.0", so the value is displayed in 0.1 kWh increments.

- The monitor data digit can be shifted to the right by the number of Pr. 891.
  For example, if the cumulative power value is 1278.56 kWh when Pr. 891 = "2", the operation panel display is 12.78 (display in 100 kWh increments) and the communication data is 12.
- If the maximum value is exceeded at Pr. 891 = "0 to 4", the monitor value is clamped at the maximum value, indicating that a digit shift is necessary. If the maximum value is exceeded at Pr. 891 = "9999", the monitor value returns to 0, and the counting starts again.
- Writing "0" in Pr. 170 clears the cumulative power monitor.

**NOTE**

If "0" is written to Pr. 170, and Pr. 170 is read again, "9999" or "10" is displayed.

**Cumulative energization time and actual operation time monitor (Pr. 171, Pr. 563, Pr. 564)**

- Cumulative energization time monitor (Pr. 52= "20") accumulates energization time from shipment of the inverter every one hour.
- On the actual operation time monitor (Pr. 52 = "23"), the inverter running time is added up every hour. (Time is not added up during a stop.)
- If the number of monitor value exceeds 65535, it is added up from 0. Pr. 563 allows the user to check how many times the cumulative energization time monitor has exceeded 65535h. Pr. 564 allows the use to check how many times the actual operation time monitor has exceeded 65535h.
- Writing "0" in Pr. 171 clears the actual operation time monitor. (The cumulative energization time monitor cannot be cleared.)

**NOTES**

The cumulative energization time does not increase if the power is turned OFF after less than an hour.

The actual operation time does not increase if the cumulative running time before power OFF is less than an hour.

If "0" is written to Pr. 171 and Pr. 171 is read again, "9999" is always displayed. Setting "9999" does not clear the actual operation time meter.

### Hiding the decimal places for the monitors (Pr. 268)

As the operation panel (FR-DU08) display is 5 digits long, the decimal places may vary during analog input, etc. The decimal places can be hidden by selecting the decimal digits with Pr. 268.

| Pr. 268 setting | Description |
|---|---|
| 9999 (initial value) | No function |
| 0 | For the first or second decimal places (0.1 increments or 0.01 increments) of the monitor, numbers in the first decimal place and smaller are rounded to display an integral value (1 increments). The monitor value equal to or smaller than 0.99 is displayed as 0. |
| 1 | When monitoring with the second decimal place (0.01 increments), the 0.01 decimal place is dropped and the monitor displays the first decimal place (0.1 increments). When monitoring with the first decimal place, the display will not change. |

***Tab. 5-128:*** *Selection of decimal digits*

**NOTE**

The number of display digits on the cumulative energization time (Pr. 52 = "20"), actual operation time (Pr. 52 = "23"), cumulative power (Pr. 52 = "25") and cumulative energy saving (Pr. 52 = "51") does not change.

### Minus sign display for the monitors (Pr. 290)

Values with minus signs can be output from the terminal AM (analog voltage output) and can be displayed on the operation panel (FR-DU08). For a list of the monitors that can output values with minus signs, refer to the monitor description list (on page 5-318).

| Pr. 290 setting | Terminal AM output | Operation panel display | Monitoring via communication |
|---|---|---|---|
| 0 (initial value) | — | — | — |
| 1 | Output with a minus sign | — | — |
| 2 | — | Displayed with minus sign. | — |
| 3 | Output with a minus sign | Displayed with minus sign. | — |
| 4 | — | — | Output with a minus sign |
| 5 | Output with a minus sign | — | Output with a minus sign |
| 6 | — | Output with a minus sign | Output with a minus sign |
| 7 | Output with a minus sign | Output with a minus sign | Output with a minus sign |

—: Output without minus sign (positive values only)

***Tab. 5-129:*** *Minus sign display for the monitors*

**NOTES**

When terminal AM (analog voltage output) is "output with a minus sign", the output will be within the –10 V DC to +10 V DC range. Connect the meter with which output level is matched.

Parameter unit (FR-PU07) displays only positive values.

### Monitor filter (Pr. 1106 to Pr. 1108)

The response level (filter time constant) of the following monitor indicators can be adjusted.

| Pr. | Monitor number | Monitor indicator name |
|---|---|---|
| 1106 | 7 | Motor torque |
| | 17 | Load meter |
| | 32 | Torque command |
| | 33 | Torque current command |
| 1107 | 6 | Running speed |
| 1108 | 18 | Motor excitation current |

***Tab. 5-130:*** *Monitor filter*

| Parameters referred to | | | |
|---|---|---|---|
| Pr. 30 | Regenerative function selection | => | page 5-652 |
| Pr. 70 | Special regenerative brake duty | => | page 5-652 |
| Pr. 37 | Motor speed display | => | page 5-314 |
| Pr. 144 | Speed setting switchover | => | page 5-314 |
| Pr. 55 | Frequency monitoring reference | => | page 5-330 |
| Pr. 56 | Current monitoring reference | => | page 5-330 |
| Pr. 866 | Torque monitoring reference | => | page 5-330 |

## 5.11.3 Monitor output to terminals FM/CA and AM

The monitored statuses can be output as the following items: analog voltage (terminal AM), pulse train (terminal FM) for the FM-type inverter, analog current (terminal CA) for the CA-type inverter.

The signal (monitored item) to be output to terminal FM/CA and terminal AM can be selected.

| Pr. | Name | Initial value | | Setting range | Description | |
|---|---|---|---|---|---|---|
| | | FM | CA | | | |
| 54<br>M300 | FM/CA terminal function selection | 1<br>(output frequency) | | 1 to 3, 5 to 14, 17, 18, 21, 24, 32 to 34, 50, 52 to 53, 61, 62, 67, 87 to 90, 92, 93, 95, 97, 98 | Select the monitored item to be output to the terminal FM and terminal CA. | |
| 158<br>M301 | AM terminal function selection | | | 1 to 3, 5 to 14, 17, 18, 21, 24, 32 to 34, 50, 52 to 54, 61, 62, 67, 70, 87 to 98 | Select the monitored item to be output to the terminal AM. | |
| 55<br>M040 | Frequency monitoring reference | 60 Hz | 50 Hz | 0 to 590 Hz | Set the full-scale value when outputting the frequency monitor value to terminals FM, CA and AM. | |
| 56<br>M041 | Current monitoring reference | Inverter Rated current | | 0 to 500 A ① | Set the full-scale value when outputting the output current monitor value to terminals FM, CA and AM. | |
| | | | | 0 to 3600 A ② | | |
| 866<br>M042 | Torque monitoring reference | 150% | | 0 to 400% | Set the full-scale value when outputting the torque monitor value to terminals FM, CA and AM. | |
| 290<br>M044 | Monitor negative output selection | 0 | | 0 to 7 | Set the availability of output with a minus sign for the terminal AM, the operation panel display, or monitoring via communication. (Refer to page 5-328.) | |
| 291<br>D100 | Pulse train I/O selection | 0 | | | **Pulse train input (terminal JOG)** | **Pulse train output (terminal FM)** |
| | | | | 0 | JOG signal ③ | FM output ④ |
| | | | | 1 | Pulse train input | FM output ④ |
| | | | | 10 ④ | JOG signal ③ | High-speed pulse train output (50% duty) |
| | | | | 11 ④ | Pulse train input | High-speed pulse train output (50% duty) |
| | | | | 20 ④ | JOG signal ③ | High-speed pulse train output (ON width fixed) |
| | | | | 21 ④ | Pulse train input | High-speed pulse train output (ON width fixed) |
| | | | | 100 ④ | Pulse train input | High-speed pulse train output (ON width fixed) Output the pulse train input without changes. |

① FR-A820-03160(55K) or lower, FR-A840-01800(55K) or lower.

② FR-A820-03800(75K) or more, FR-A840-02160(75K) or more.

③ Function assigned to Pr. 185 "JOG terminal function selection".

④ Valid only for the FM type inverters.

**Monitor description list (Pr. 54, Pr. 158)**

- Set Pr. 54 "FM/CA terminal function selection" for the monitor to be output to the terminal FM (pulse train output) and terminal CA (analog current output).
- Set Pr. 158 "AM terminal function selection" for the monitor to be output to the terminal AM (analog voltage output). Output with a negative sign can be made (-10 V DC to +10 V DC) from the terminal AM. "○" in the [Negative (-) output] indicates the output value is negative at the terminal AM. (For setting of the output with/without minus sign, refer to page 5-330.)
- Refer to the following table and set the monitor to be displayed. (Refer to page 5-318 for the monitor description.)

| Types of monitor | Unit | Pr. 54 (FM/CA) Pr. 158 (AM) setting | Terminal FM, CA, AM Full-scale value | Negative (-) output | REMARKS |
|---|---|---|---|---|---|
| Output frequency | 0.01 Hz | 1 | Pr. 55 | | |
| Output current ② | 0.01 A/0.1 A ① | 2 | Pr. 56 | | |
| Output voltage | 0.1 V | 3 | 200 V class: 400 V<br>400 V class: 800 V | | |
| Frequency setting value | 0.01 Hz | 5 | Pr. 55 | | |
| Running speed | 1 (r/min) | 6 | Value is Pr. 55 converted by Pr. 37, Pr. 144.<br>(Refer to page 5-314.) | | Refer to page 5-314 for the running speed monitor. |
| Motor torque | 0.1% | 7 | Pr. 866 | ○ | |
| Converter output voltage ② | 0.1 V | 8 | 200 V class: 400 V<br>400 V class: 800 V | | |
| Regenerative brake duty ③ | 0.1% | 9 | Brake duty decided by Pr. 30 and Pr. 70. | | |
| Electronic thermal O/L relay load factor | 0.1% | 10 | Electronic thermal O/L relay operation level (100%) | | |
| Output current peak value | 0.01 A/0.1 A ① | 11 | Pr. 56 | | |
| Converter output voltage peak value | 0.1 V | 12 | 200 V class: 400 V<br>400 V class: 800 V | | |
| Input power | 0.01 kW/<br>0.1 kW ① | 13 | Rated inverter power × 2 | | |
| Output power ② | 0.01 kW/<br>0.1 kW ① | 14 | Rated inverter power × 2 | | |
| Load meter | 0.1% | 17 | Pr. 866 | | |
| Motor excitation current | 0.0 1 A/0.1 A ① | 18 | Pr. 56 | | |
| Reference voltage output | — | 21 | — | | Terminal FM:<br>1440 pulses/s is output when<br>Pr. 291 = 0,1.<br>50 k pulses/s is output when<br>Pr. 291 ≠ 0,1.<br>Terminal CA:<br>output is 20 mA<br>Terminal AM:<br>output is 10 V. |
| Motor load factor | 0.1% | 24 | 200% | | |
| Torque command | 0.1% | 32 | Pr. 866 | ○ | |
| Torque current command | 0.1% | 33 | Pr. 866 | ○ | |
| Motor output | 0.01 kW/<br>0.1 kW ① | 34 | Rated motor capacity | | |

***Tab. 5-131:*** *Monitor description list (1)*

| Types of monitor | Unit | Pr. 54 (FM/CA) Pr. 158 (AM) setting | Terminal FM, CA, AM Full-scale value | Negative (-) output | REMARKS |
|---|---|---|---|---|---|
| Energy saving effect | Changeable by parameter setting | 50 | Inverter capacity | | Regarding the energy saving monitor, refer to page 5-182 |
| PID set point | 0.1% | 52 | 100% | | Refer to page 5-516 for the PID control. |
| PID measured value | 0.1% | 53 | 100% | | |
| PID deviation | 0.1% | 54 ④ | 100% | ○ | Output with a negative sign (terminal AM) |
| Motor thermal load factor | 0.1% | 61 | Motor thermal operation level (100%) | | |
| Inverter thermal load factor | 0.1% | 62 | Inverter thermal operation level (100%) | | |
| PID measured value 2 | 0.1% | 67 | 100% | | |
| PLC function analog output | 0.1% | 70 | 100% | ○ | Refer to page 5-564 for the PLC function. |
| Remote output value 1 | 0.1% | 87 | 100% | ○ | Refer to page 5-370 for the analog remote output. |
| Remote output value 2 | 0.1% | 88 | 100% | | |
| Remote output value 3 | 0.1% | 89 | 100% | | |
| Remote output value 4 | 0.1% | 90 | 100% | | |
| PID manipulated variable | 0.1% | 91 ④ | 100% | ○ | Output with a minus sign (terminal AM) |
| Second PID set point | 0.1% | 92 | 100% | | Refer to page 5-516 for the PID control. |
| Second PID measured value | 0.1% | 93 | 100% | | |
| Second PID deviation | 0.1% | 94 ④ | 200% | ○ | |
| Second PID measured value 2 | 0.1% | 95 | 100% | | |
| Second PID manipulated variable | 0.1% | 96 ④ | 100% | ○ | |
| Dancer main speed setting | 0.01 Hz | 97 | Pr. 55 | | Refer to page 5-530 for the dancer control. |
| Control circuit temperature | 1 °C | 98 | 100 °C | ○ | Terminal FM/CA: 0 to 100°C<br>Terminal AM: -20 to 100°C |

***Tab. 5-131:*** *Monitor description list (2)*

① Differs according to capacities. (FR-A820-03160(55K) or lower, FR-A840-01800(55K) or lower/ FR-A820-03800(75K) or higher, FR-A840-02160(75K) or higher)

② When the output current is less than the specified current level (5% of the rated inverter current), the output current is monitored as 0 A. Therefore, the monitored value of an output current and output power may be displayed as "0" when using a much smaller-capacity motor compared to the inverter or in other instances that cause the output current to fall below the specified value.

③ The setting is available only for standard models.

④ The setting is available only with terminal AM (Pr. 158).

**Frequency monitor reference (Pr. 55)**

- Set the full-scale value for outputting the monitored items of output frequency, frequency setting value, and Dancer main speed setting to the terminals FM, CA and AM.

- For the FM-type inverters, set the full-scale value of the connected meter when the pulse speed of terminal FM is 1440 pulses/s (50k pulses/s). Set the frequency to be indicated as the full scale value on the frequency meter (1 mA analog meter) connected between terminal FM and SD. (For example, 60 Hz or 120 Hz.) Pulse speed is proportional to the output frequency of the inverter. (Maximum pulse train output is 2400 pulses/s (55k pulses/s).)

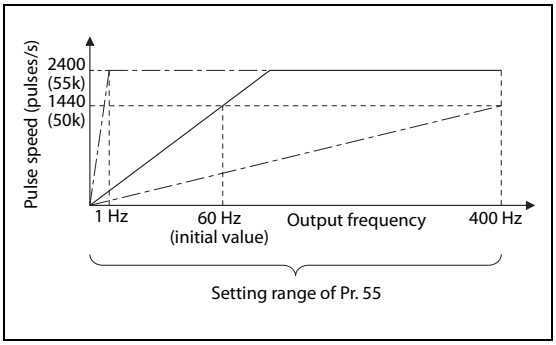


***Fig. 5-144:***
*Frequency monitoring reference for terminal FM*

- For the CA-type inverters, set the full-scale value of the connected meter when output current of terminal CA is 20 mA. Set the frequency to be indicated as the full scale value on the meter (20 mA DC ammeter connected between terminal CA and 5; for example, 60 Hz or 120 Hz. Output current is proportional to the frequency. (The maximum output current is 20 mA DC.)

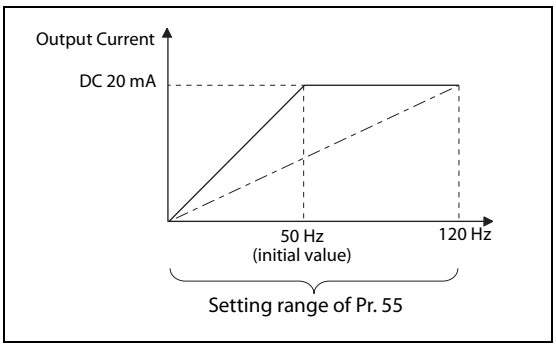


***Fig. 5-145:***
*Frequency monitoring reference for terminal CA*

- For the calibration of terminal AM, set the full-scale value of the connected meter when output voltage of terminal FM is 10 V DC. Set the frequency to be indicated as the full scale value on the meter (10 V DC voltmeter) connected between terminal AM and 5. (For example, 60 Hz or 120 Hz) Output voltage is proportional to the frequency. (The maximum output voltage is 10 V DC.)

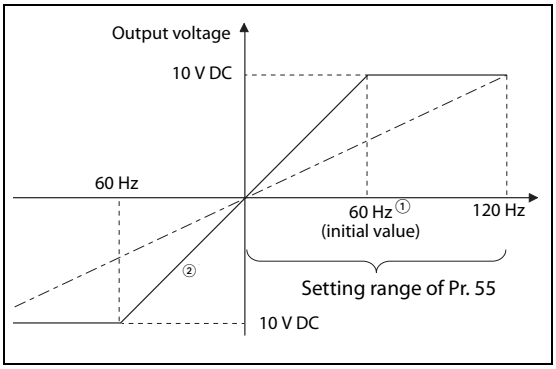


***Fig. 5-146:***
*Frequency monitoring reference for terminal AM*

① FM type: 60 Hz; CA type: 50 Hz

② Output with a negative sign available when Pr. 290 "Monitor negative output selection" = "1, 3"

**Current monitor reference (Pr. 56)**

- Output current, Output current peak value, Motor excitation current and monitor from the terminals FM, CA and AM.
- For the FM-type inverters, set the full-scale value of the connected meter when the pulse speed of terminal FM is 1440 pulses/s (50k pulses/s).
  Set the current to be indicated as the full scale value to the meter (1 mA analog meter) connected between terminal FM and SD.
  Pulse speed is proportional to the monitored value of output current. (Maximum pulse train output is 2400 pulses/s (55k pulses/s).)
- For the CA-type inverters, set the full-scale value of the connected current meter when output current of terminals CA is 20 mA. Set the current to be indicated as the full scale value on the meter (20 mADC ammeter) connected between terminals CA and 5.Output current is proportional to the monitored value of output current. (The maximum output current is 20 mA DC.)
- For the calibration of terminal AM, set the full-scale value of the connected current meter when the output voltage of terminal AM is 10 V DC.
  Set the current to be indicated as the full scale value on the meter (10 V DC voltmeter) connected between terminal AM and 5.
  Output voltage is proportional to the monitored value of output current. (The maximum output voltage is 10 V DC.)

**Torque monitor reference (Pr. 866)**

- Set the full scale value when outputting the current monitor from terminal the FM, CA or AM.
- For the FM-type inverters, set the full-scale value of the connected torque meter when the pulse speed of terminal FM is 1440 pulses/s (50k pulses/s). Set the torque to be indicated as the full scale value on the meter (1 mA analog meter) connected between terminals FM and SD.
  Pulse speed is proportional to the monitored value of torque. (Maximum pulse train output is 2400 pulses/s (55k pulses/s).)
- For the CA-type inverters, set the full-scale value of the connected torque meter when output current of the terminal CA is 20 mA DC.
  Set the torque to be indicated as the full scale value on the meter (20 mA DC ammeter) connected between terminals CA and 5.
  Output current is proportional to the monitored value of torque. (The maximum output voltage is 20 mA DC.)
- For the calibration of terminal AM, set the full-scale value of the connected torque meter when the output voltage of terminal AM is at 10 V DC.
  Set the torque to be indicated as the full scale value on the meter (10 V DC voltmeter) connected between terminal AM and 5.
  Output voltage is proportional to the monitored value of torque. (The maximum output voltage is 10 V DC.)

**Terminal FM pulse train output (Pr. 291)**

Two kinds of pulse trains can be output to the terminal FM.

- When Pr. 291 "Pulse train I/O selection" = "0 (initial value) or 1", output is made from FM, with maximum of 8 V DC and 2400 pulses/s.
  The pulse width can be adjusted by using the operation panel or parameter unit and calibration parameter C0 (Pr. 900) FM/CA terminal calibration.
- Commands can be sent (such as inverter output frequency) by connecting a 1 mA full-scale DC ammeter or a digital meter.

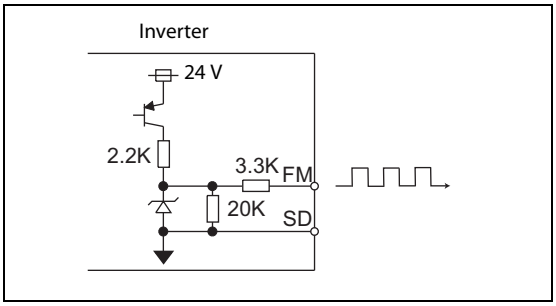


***Fig. 5-147:*** *FM output circuit*

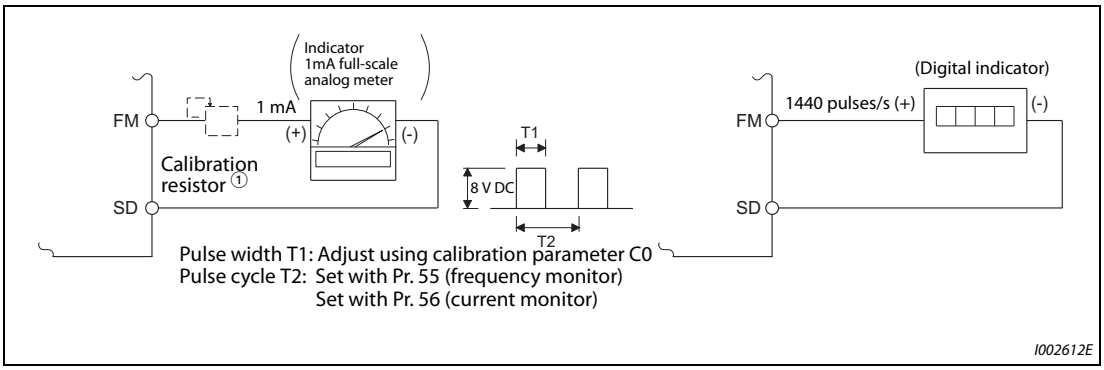


***Fig. 5-148:*** *Indicating the FM output*

① Not needed when the operation panel (FR-DU08) or parameter unit (FR-PU07) is used for calibration.
Use a calibration resistor when the indicator (frequency meter) needs to be calibrated by a neighboring device because the indicator is located far from the inverter.
However, the frequency meter needle may not deflect to full-scale if the calibration resistor is connected. In this case, calibrate additionally with the operation panel or parameter unit.

② In the initial setting, 1 mA full-scale and 1440 pulses/s terminal FM are used at 60 Hz.

- When Pr. 291 Pulse train I/O selection = "10, 11, 20, 21, 100", this is high-speed pulse train output for open collector output. A maximum pulse train of 55k pulses/s is output.
  There are two types of pulse width: "50% duty" and "fixed ON width"; this cannot be adjusted with the calibration parameter C0 (Pr. 900) "FM/CA terminal calibration".

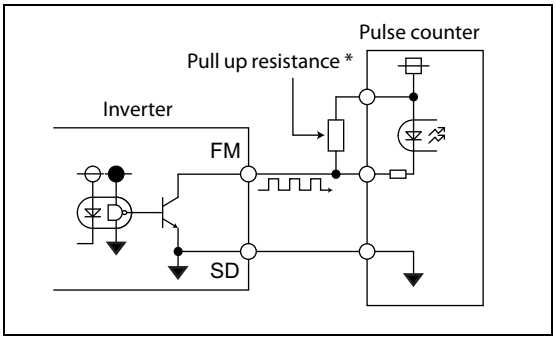


***Fig. 5-149:*** *High-speed pulse train output circuit (example of connection to pulse counter)*

* The pulses may weaken due to stray capacitance in the wiring if the wiring is long, and the pulse counter will be unable to recognize the pulses. Connect the open collector output to the power source with a pull-up resistor if the wiring is too long.
Check the pulse counter specs for the pull-up resistance. The resistance should be at 80 mA of the load current or less.

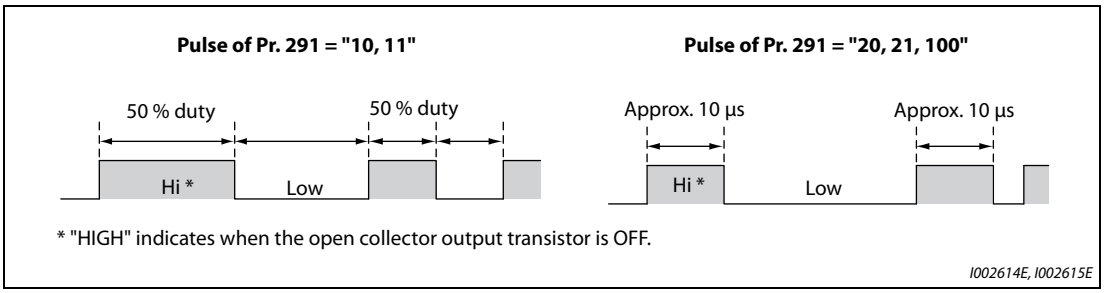


***Fig. 5-150:*** *The two types of pulse width*

- When Pr. 291 = "10, 11", the pulse cycle is 50 % duty (ON width and OFF width are the same).
- When Pr. 291 = "20, 21, 100", the pulse ON width is output at a fixed width (approx. 10 µs).
- At the "100" setting, the same pulse train from the pulse train input (terminal JOG) will be outputted. This is used when running at a synchronized speed with more than one inverter. (Refer to page 5-274.)

| Item | High-speed pulse train output specifications |
|---|---|
| Output method | NPN open collector output |
| Voltage between collector-emitter | 30 V (max.) |
| Maximum permissible load current | 80 mA |
| Output pulse rate | 0 to 55 kpps ① |
| Output resolution | 3 pps (excluding jitter) |

***Tab. 5-132:*** *High-speed pulse train output specifications*

① 50 kpps when the monitor output value is 100%.

**NOTES**

Terminal JOG input specifications (pulse train input or contact input) can be selected with Pr. 291. When changing the setting value, be careful not to change the terminal JOG input specifications. (Refer to page 5-274 for pulse train input.)

Connect a meter between the terminals FM and SD after changing the Pr. 291 setting value. When using the pulse train of FM output (voltage output), be careful that voltage is not added to terminal FM.

A connection cannot be made to the pulse input of a source logic type.

If all parameter clear is performed when selecting the high-speed pulse train output (Pr. 291 = "10, 11, 20, 21, 100"), the terminal FM output can be changed from high-speed pulse train output to FM output (voltage output), since the Pr. 291 setting value returns to the initial value of "0". Perform all parameter clear after removing the device connected to the terminal FM.

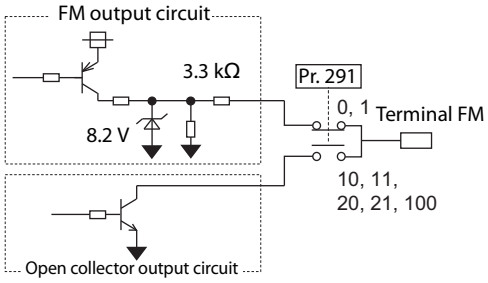


## 5.11.4 Adjusting terminals FM/CA and AM

By using the operation panel or parameter unit, terminals FM, CA and AM can be adjusted (calibrated) to the full scale.

| Pr. | Name | Initial value | Setting range | Description |
|---|---|---|---|---|
| C0 (900) ① M310 | FM/CA terminal calibration | — | — | Calibrates the scale of the meter connected to terminals FM and CA. |
| C1 (901) ① M320 | AM terminal calibration | — | — | Calibrates the scale of the analog meter connected to terminal AM. |
| C8 (930) ① M330 | Current output bypass signal | 0% | 0 to 100% | Set the signal value at the minimum analog current output. |
| C9 (930) ① M331 | Current output bypass current | 0% | 0 to 100% | Set the current value at the minimum analog current output. |
| C10 (931) ① M332 | Current output gain signal | 100% | 0 to 100% | Sets the signal value when the analog current output is at maximum. |
| C11 (931) ① M333 | Current output gain current | 100% | 0 to 100% | Set the current value at the maximum analog current output. |
| 867 M321 | AM output filter | 0.01 s | 0 to 5 s | Set the terminal AM output filter. |
| 869 M334 | Current output filter | 0.01 s | 0 to 5 s | Set the terminal AM output filter. |

① The parameter number in parentheses ( ) is the one for use with the parameter unit (FR-PU07).

**Terminal FM calibration (C0 (Pr. 900))**

- The terminal FM is preset to output pulses. By setting C0 (Pr. 900), the meter connected to the inverter can be calibrated by parameter setting without use of a calibration resistor.
- Using the pulse train output of the terminal FM, a digital display can be provided to connect a digital counter.The monitor value is 1440 pulses/s output at the full-scale value of the monitor description list (on page 5-318) (Pr. 54 "FM/CA terminal function selection").

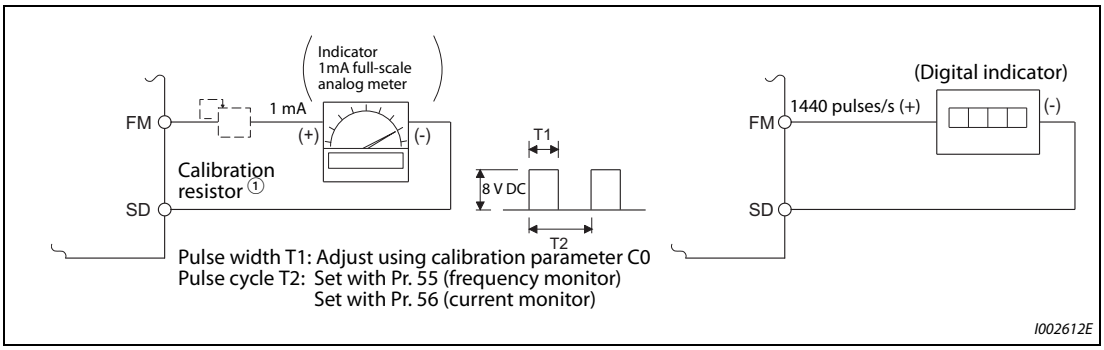


***Fig. 5-151:*** *Terminal FM calibration*

① Not needed when the operation panel (FR-DU08) or parameter unit (FR-PU07) is used for calibration. Use a calibration resistor when the indicator (frequency meter) needs to be calibrated by a neighboring device because the indicator is located far from the inverter.
However, the frequency meter needle may not deflect to full-scale if the calibration resistor is connected.In this case, perform calibration using the operation panel or parameter unit.

② In the initial setting, 1 mA full-scale and 1440 pulses/s terminal FM are used at 60 Hz.

- Calibrate the terminal FM in the following procedure.

① Connect an indicator (frequency meter) across terminals FM and SD of the inverter. (Note the polarity. The terminal FM is positive.)

② When a calibration resistor has already been connected, adjust the resistance to "0" or remove the resistor.

③ Refer to the monitored item list (page 5-318) and set Pr. 54.
When the running frequency or inverter output current is selected on the monitor, set the running frequency or current value at which the output signal will be 1440 pulses/s, using Pr. 5 "Frequency monitoring reference" or Pr. 56 "Current monitoring reference" beforehand. Normally, at 1440 pulses/s the meter deflects to full-scale.

④ If the meter needle does not point to maximum even at maximum output., calibrate it with C0 (Pr. 900).

**NOTES**

When outputting such an item as the output current, which cannot reach a 100% value easily by operation, set Pr. 54 to "21" (reference voltage output) and calibrate. 1440 pulses/s are output from the terminal FM.

When Pr. 310 "Analog meter voltage output selection" = "21", the terminal FM calibration cannot be performed. For the details of Pr. 310, refer to the Instruction Manual of FR-A8AY.

The wiring length of the terminal FM should be 200 m at maximum.

The initial value of the calibration parameter C0 (Pr. 900) is set to 1 mA full-scale and 1440 pulses/s terminal FM pulse train output at 60 Hz. The maximum pulse train output of terminal FM is 2400 pulses/s.

When connecting a frequency meter between terminals FM-SD and monitoring the running frequency, it is necessary to change Pr. 55 to the maximum frequency, since the FM terminal output will be saturated at the initial value when the maximum frequency reaches 100 Hz or greater.

Calibration with the calibration parameter C0 (Pr. 900) cannot be done when Pr. 291 "Pulse train I/O selection" = "10, 11, 20, 21, 100" (high-speed pulse train output).

**Calibration procedure for terminal FM when using the operation panel (FR-DU08)**

| Operation |
|---|
| ① Screen at power-ON<br>The monitor display appears. |
| ② Changing the operation mode<br>Press PU/EXT to choose the PU operation mode. [PU] indicator is lit.<br>Calibration is also possible in the External operation mode. |
| ③ Parameter setting mode<br>Press MODE to choose the parameter setting mode. (The parameter number read previously appears.) |
| ④ Calibration parameter selection<br>Turn ⊙ until C. . . . appears. Press SET to display C -- -- -- -- . |
| ⑤ Selecting the parameter number<br>Turn ⊙ until C 0 (C0 (Pr. 900) FM/CA terminal calibration) appears. Press SET to enable the parameter setting. The monitored value of the item (initially the output frequency) selected by Pr. 54 FM/CA terminal function selection will appear. |
| ⑥ Pulse output via terminal FM<br>If stopped, press FWD or REV to start the inverter operation. (To monitor the output frequency, motor connection is not required.<br>Calibration is also possible in a stop status. |
| ⑦ Scale adjustment<br>Turn ⊙ to move the meter needle to a desired position. |
| ⑧ Setting completed<br>Press SET to enter the setting. The monitored value and C 0 flicker alternately.<br>• Turn ⊙ to read another parameter.<br>• Press SET to return to the C -- -- -- -- display.<br>• Press SET twice to show the next parameter. |

***Tab. 5-133:*** *FM terminal calibration*

**NOTES**

Calibration can also be made for the External operation.Set the frequency in the External operation mode, and make calibration in the above procedure.

Calibration can be performed during operation.

For the operation from the parameter unit (FR-PU07), refer to the Instruction Manual of the parameter unit.

**Terminal CA calibration (C0 (Pr. 900), C8 (Pr. 930) to C11 (Pr. 931))**

- Terminal CA is initially set to provide a 20 mA DC output in the full-scale state of the corresponding monitor item.
  Calibration parameter C0 (Pr. 900) allows the output current ratio (gains) to be adjusted according to the meter scale.Note that the maximum output current is 20 mA DC.
- Set a value at the minimum current output in the calibration parameters C8 (Pr. 930) and C9 (Pr. 930). Calibration parameter C10 (Pr. 931) and C11 (Pr. 931) are used to set a value at the maximum current output.
- Set the output signal values (output monitor set with Pr. 54) at zero and at the maximum current output from the terminal CA (using calibration parameters C8 (Pr. 930) and C10 (Pr. 931). The full scale for each monitor is 100% at this time.
- Set the output current values (output monitor set with Pr. 54) at zero and at the maximum current output from the terminal CA (using calibration parameters C9 (Pr. 930) and C11 (Pr. 931). The output current calibrated by calibration parameter C0 (Pr. 900) is 100% at this time.

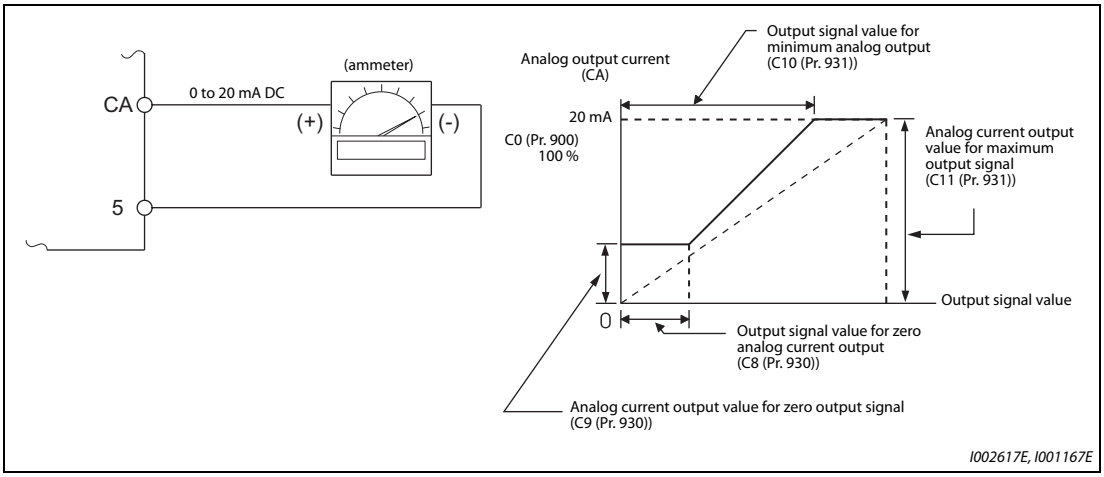


***Fig. 5-152:*** *Terminal CA calibration*

- Calibrate the terminal CA in the following procedure.
  ① Connect a 0-20 mA DC indicator (frequency meter) across terminals CA and 5 of the inverter. (Note the polarity.The terminal CA is positive.)
  ② Set the initial value of calibration parameter C8 (Pr. 930) to C11 (Pr. 931). If the meter needle does not indicate zero when the current input is at zero, calibrate the meter using C8 (Pr. 930) and C9 (Pr. 930).
  ③ Refer to the monitor description list (page 5-331) and set Pr. 54.
  When the running frequency or inverter output current is selected on the monitor, set the running frequency or current value at which the output signal will be 20 mA, using Pr. 55 or Pr. 56 beforehand.
  ④ If the meter needle does not point to maximum even at maximum output, calibrate it with C0 (Pr. 900).

**NOTES**

When outputting such an item as the output current, which cannot reach a 100% value easily by operation, set Pr. 54 to "21" (reference voltage output) and calibrate. 20 mA DC is output from the terminal CA.

When Pr. 310 "Analog meter voltage output selection" = "21", the terminal FM calibration cannot be performed. For the details of Pr. 310, refer to the Instruction Manual of FR-A8AY.

Output is possible from terminal CA even if C8 (Pr. 930) ≥ C10 (Pr. 931), C9 (Pr. 930) ≥ C11 (Pr. 931).

**Adjusting the response of terminal CA (Pr. 869)**

- Using Pr. 869, the output voltage response of the terminal CA can be adjusted in the range of 0 to 5 s.
- Increasing the setting stabilizes the terminal CA output more but reduces the response level. (Setting "0" sets the response level to 7 ms.)

**Calibration of terminal AM (C1 (Pr. 901))**

- Terminal AM is initially set to provide a 10 V DC output in the full-scale state of the corresponding monitor item. Calibration parameter C1 (Pr. 901) allows the output voltage ratio (gains) to be adjusted according to the meter scale. Note that the maximum output voltage is 10 V DC.

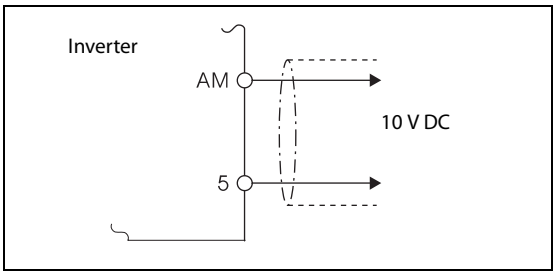


***Fig. 5-153:***
*Connecting an analog meter to the AM output*

I001168

- Calibrate the AM terminal in the following procedure.
  ① Connect a 0-10 V DC indicator (frequency meter) across terminals AM and 5 of the inverter. (Note the polarity. The terminal AM is positive.)
  ② Refer to the monitor description list (page 5-318) and set Pr. 158 "AM terminal function selection".
  When the running frequency or inverter output current is selected on the monitor, set the running frequency or current value at which the output signal will be 10 V, using Pr. 55 or Pr. 56 beforehand.
  ③ If the meter needle does not point to maximum even at maximum output., calibrate it with C1 (Pr. 901).

**NOTES**

When outputting such an item as the output current, which cannot reach a 100% value easily by operation, set Pr. 54 to "21" (reference voltage output) and calibrate.10 V DC is output from the terminal AM.

When Pr. 310 "Analog meter voltage output selection" = "21", the terminal FM calibration cannot be performed. For the details of Pr. 310, refer to the Instruction Manual of FR-A8AY.

Use Pr. 290 "Monitor negative output selection" to enable negative output from the terminal AM. When this is set, the output voltage range will be –10 V DC to +10 V DC. Calibrate the terminal AM with the maximum positive output value.

**Adjusting the response of terminal AM (Pr. 867)**

- Using Pr. 867, the output voltage response of the terminal AM can be adjusted in the range of 0 to 5 s.
- Increasing the setting stabilizes the terminal AM output more but reduces the response level. (Setting "0" sets the response level to 7 ms.)

| Parameters referred to | | | |
|---|---|---|---|
| Pr. 54 | FM/CA terminal function selection | => | page 5-330 |
| Pr. 55 | Frequency monitoring reference | => | page 5-330 |
| Pr. 56 | Current monitoring reference | => | page 5-330 |
| Pr. 158 | AM terminal function selection | => | page 5-330 |
| Pr. 290 | Monitor negative output selection | => | page 5-330 |
| Pr. 291 | Pulse train I/O selection | => | page 5-274 |

## 5.11.5 Energy saving monitor

From the estimated consumed power during commercial power supply operation, the energy saving effect by use of the inverter can be monitored and output.

| Pr. | Name | Initial value | Setting range | Description |
|---|---|---|---|---|
| 52<br>M100 | Operation panel main monitor selection | 0<br>(output frequency) | Refer to page 5-317 | 50: Power saving monitor<br>51: Cumulative power saving monitor |
| 774<br>M101 | Operation panel monitor selection 1 | 9999 | | |
| 775<br>M102 | Operation panel monitor selection 2 | | | |
| 776<br>M103 | Operation panel monitor selection 3 | | | |
| 992<br>M104 | Operation panel setting dial push monitor selection | 0<br>(set frequency) | | |
| 54<br>M300 | FM/CA terminal function selection | 1<br>(output frequency) | Refer to page 5-330 | 50: Power saving monitor |
| 158<br>M301 | AM terminal function selection | | | |
| 891<br>M023 | Cumulative power monitor digit shifted times | 9999 | 0 to 4 | Set the number of times to shift the cumulative power monitor digit.<br>The monitored value is clamped at the maximum value. |
| | | | 9999 | No shift.<br>The monitored value is cleared when it exceeds the maximum value. |
| 892<br>M200 | Load factor | 100% | 30 to 150% | Set the load factor for the commercial power supply operation.<br>This is multiplied by the power consumption rate (page 5-348) during commercial power supply operation. |
| 893<br>M201 | Energy saving monitor reference (motor capacity) | Rated inverter current | 0.1 to 55 kW ① | Set the motor capacity (pump capacity). Set when calculating the power saving power rate, average power saving rate, and power during commercial power supply operation. |
| | | | 0 to 3600 kW ② | |

| Pr. | Name | Initial value | Setting range | Description |
|---|---|---|---|---|
| 894<br>M202 | Control selection during commercial power-supply operation | 0 | 0 | Discharge damper control (fan) |
| | | | 1 | Inlet damper control (fan) |
| | | | 2 | Valve control (pump) |
| | | | 3 | Commercial power supply drive (fixed value) |
| 895<br>M203 | Power saving rate reference value | 9999 | 0 | Consider the value during commercial power supply operation as 100%. |
| | | | 1 | Consider Pr. 893 setting as 100%. |
| | | | 9999 | No function |
| 896<br>M204 | Power unit cost | 9999 | 0 to 500 | Set the power unit cost. The power cost savings are displayed on the energy saving monitor. |
| | | | 9999 | No function |
| 897<br>M205 | Power saving monitor average time | 9999 | 0 | Average of 30 minutes |
| | | | 1 to 1000 h | Average of the set time |
| | | | 9999 | No function |
| 898<br>M206 | Power saving cumulative monitor clear | 9999 | 0 | Cumulative monitor value clear |
| | | | 1 | Cumulative monitor value hold |
| | | | 10 | Continue accumulation (communication data upper limit 9999) |
| | | | 9999 | Continue accumulation (communication data upper limit 65535) |
| 899<br>M207 | Operation time rate (estimated value) | 9999 | 0 to 100% | This value is used for calculating the annual power saving amount. Set the annual operation ratio (consider 365 days × 24 hours as 100%). |
| | | | 9999 | No function |

① For the FR-A820-03160(55K) or lower, and FR-A840-01800(55K)or lower.

② For the FR-A820-03800(75K) or higher, and FR-A840-02160(75K)or higher.

### Energy saving monitor list

- The items that can be monitored on the power saving monitor (Pr. 52, Pr. 54, Pr. 158, Pr. 774 to Pr. 776, Pr. 992 = "50") are indicated below.
  (Only [❶ Power saving] and [❸ Average power saving] can be set to Pr. 54 (terminal FM, terminal CA) and Pr. 158 (terminal AM).)

| | Energy saving monitored item | Description and formula | Increment | Parameter setting | | | |
|---|---|---|---|---|---|---|---|
| | | | | Pr. 895 | Pr. 896 | Pr. 897 | Pr. 899 |
| ❶ | Power saving | The difference between the estimated value of the required power during commercial power supply operation and the input power calculated with the inverter.<br>Power supply during commercial power supply operation - input power monitor | 0.01 kW/<br>0.1 kW ③ | 9999 | — | 9999 | — |
| ❷ | Power saving rate | The power saving ratio with the commercial power supply operation as 100%.<br>$\frac{\text{❶ Power saving}}{\text{Power during commercial power supply operation}} \times 100$ | 0.1% | 0 | | | |
| | | The power saving ratio with Pr. 893 as 100%.<br>$\frac{\text{❷ Power saving rate}}{\text{Pr. 893}} \times 100$ | | 1 | | | |
| ❸ | Average power saving | The average power saving per hour during a predetermined time (Pr. 897).<br>$\frac{\sum(\text{❶ Power saving} \times \Delta t)}{\text{Pr. 897}}$ | 0.01 kWh/<br>0.1 kWh ③ | 9999 | 9999 | 0 to 1000 h | |
| ❹ | Average power saving rate | The average power saving ratio with the commercial power supply operation as 100%.<br>$\frac{\sum(\text{❷ Power saving rate} \times \Delta t)}{\text{Pr. 897}} \times 100$ | 0.1% | 0 | | | |
| | | The average power saving ratio with Pr. 893 as 100%.<br>$\frac{\text{❸ Average power saving}}{\text{Pr. 893}} \times 100$ | | 1 | | | |
| ❺ | Average power cost savings | The average power saving in terms of cost.<br>❸ Average power saving × Pr. 896 | 0.01/0.1<br>③ | — | 0 to 500 | | |

***Tab. 5-134:*** *Power saving monitor list*

- The items that can be monitored on the cumulative energy saving monitor (Pr. 52, Pr. 774 to Pr. 776, Pr. 992 = "51") are indicated below.
  (The monitor value of the cumulative monitor can be shifted to the right with Pr. 891 "Cumulative power monitor digit shifted times".)

| | Energy saving monitored item | Description and formula | Incre-ment | Parameter setting | | | |
|---|---|---|---|---|---|---|---|
| | | | | Pr. 895 | Pr. 896 | Pr. 897 | Pr. 899 |
| ❻ | Power saving amount | The cumulative power saving is added up per hour.<br>∑ (❶ Power saving × Δt) | 0.01 kWh/ 0.1 kWh ①②③ | — | 9999 | — | 9999 |
| ❼ | Power cost saving | The power saving amount in terms of cost.<br>❻ Power saving amount × Pr. 896 | 0.01/0.1 ①③ | — | 0 to 500 | | |
| ❽ | Annual power saving amount | Estimated value of annual power saving amount.<br>$\frac{\text{❻ Power saving amount}}{\text{Operation time during power saving accumulation}} \times 24 \times 365 \times \frac{\text{Pr. 899}}{100}$ | 0.01 kWh/ 0.1 kWh ①②③ | — | 9999 | | 0 to 100% |
| ❾ | Annual power cost savings | Annual power saving amount in terms of cost.<br>❽ Annual power saving amount × Pr. 896 | 0.01/0.1 ①③ | — | 0 to 500 | | |

***Tab. 5-135:*** *Cumulative saving power monitor list*

① For communication, (RS-485 communication, communication option), the display increments are 1. For example, "10.00 kWh" is displayed as "10" for communication data.

② When using the parameter unit (FR-PU07), "kW" is displayed

③ The increment differs according to capacities. (FR-A820-03160(55K) or lower, FR-A840-01800(55K) or lower / FR-A820-03800(75K) or higher, FR-A840-02160(75K) or higher.)

**NOTES**

The operation panel (FR-DU08) and parameter unit (FR-PU07) has a 5-digit display. This means, for example, that when a monitor value in 0.01 units exceeds "999.99", the decimal place is moved up as in "1000.0" and the display changes to 0.1 units. The maximum display number is "99999".

The maximum value for communication (RS-485 communication, communication option) when Pr. 898 "Power saving cumulative monitor clear" = "9999" is "65535". The maximum value for the 0.01-unit monitor is "655.35", and the maximum value for the 0.1-unit monitor is "6553.5".

**Power saving real-time monitor ([❶ Power saving] and [❷ Power saving rate])**

- On the [❶ Power saving monitor], an energy saving effect as compared to the consumed power during commercial power supply operation (estimated value) is calculated and displays on the main monitor.
- In the following cases, the [❶ Power saving monitor] indicates "0".
  - (a) Calculated values of the power saving monitor are negative values.
  - (b) During DC injection brake operation.
  - (c) The motor is not connected (output current monitor is 0A).
- On the [❷ Power saving rate monitor], the power saving rate considering the consumed power during the power supply operation (estimated value) as 100% is displayed. Pr. 895 "Power saving rate reference value" needs to be set to "0". Energy saving monitor reference (motor capacity)

**Average power saving monitor**
**([❸ Average power saving], [❹ Average power saving rate], [❺ Average power cost savings])**

- The average power saving monitors are displayed by setting a value other than 9999 in Pr. 897 "Power saving monitor average time".
- On the [❸ Average power saving monitor], average power saving amount for each average time period s displayed.
- When Pr. 897 is set, the average value is updated each time the average time period elapses, with the power-ON or inverter reset as the starting point.
  The power savings average value update timing signal (Y92) is inverted every time the average value is updated.

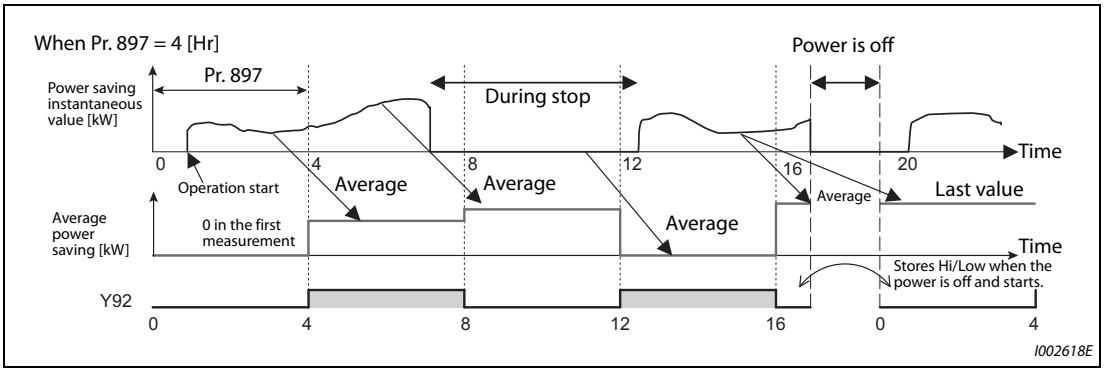


***Fig. 5-154:*** *Update of the average value*

- When Pr. 895 "Power saving rate reference value" the [❷ Average power saving rate] for the averaging time period is displayed on the [4 Average power saving rate] monitor.
- When the power cost per 1 kWh power amount is set in Pr. 896 "Power unit cost", the cost of the saved power ([❸ Average power saving] × Pr. 896) is displayed on the [❺ Average power cost savings].

**Cumulative energy saving monitors ([❻ Power saving amount], [❼ Power cost saving], [❽ Annual power saving amount], [❾ Annual power saving savings]).**

- On the cumulative energy saving cumulative monitors, the monitor data digit can be shifted to the right by the number of Pr. 891 "Cumulative power monitor digit shifted times". setting. For example, if the cumulative power value is 1278.56 kWh when Pr. 891 = "2", the PU/DU display is 12.78 (display in 100 kWh increments) and the communication data is 12. If the maximum value is exceeded when Pr. 891 = "0 to 4", the value is clamped at the maximum value, indicating that a digit shift is necessary. If the maximum value is exceeded when Pr. 891 = "9999", the value returns to 0, and the counting starts again. In other monitors, the value is clamped at the displayed maximum value.
- The [❻ Cumulative power saving amount] monitor (6)] can measure the power during a predetermined period. Measure with the following procedure.

  ① Write "9999" or "10" in Pr. 898 "Power saving cumulative monitor clear".

  ② Write "0" in Pr. 898 at the measurement start time to clear the power saving cumulative monitor value and start power saving accumulation.

  ③ Write "1" in Pr. 898 at the measurement end time to hold the power saving cumulative monitor value.

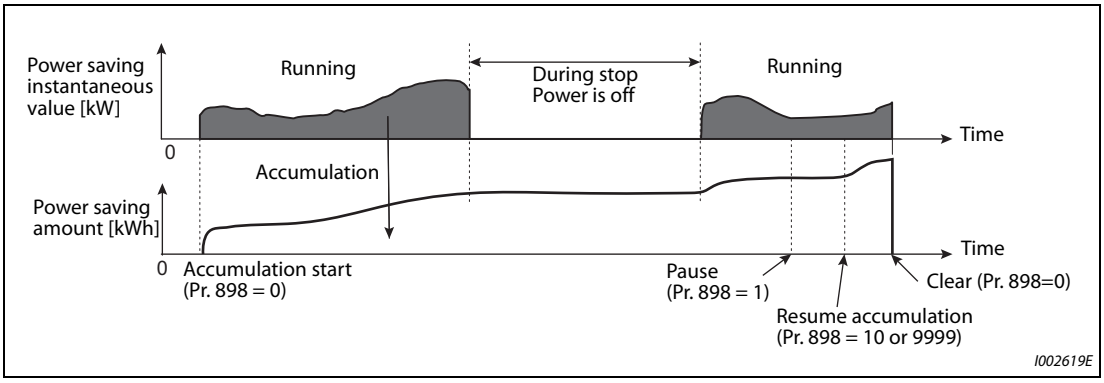


***Fig. 5-155:*** *Cumulative energy saving monitor*

**NOTE**

The power saving cumulative monitor value is saved every hour. This means that if the power is turned OFF after less than an hour, when then the power is turned ON again, the previously saved monitor value is displayed, and accumulation starts. (In some cases, the cumulative monitor value may go down.)

**Estimated power value in commercial power supply operation (Pr. 892, Pr. 893, Pr. 894)**

- Select the pattern for commercial power supply operation from the four patterns of discharge damper control (fan), suction damper control (fan), valve control (pump) and commercial power driving, and set it in Pr. 894 "Control selection during commercial power-supply operation".
- Set the motor capacity (pump capacity) in Pr. 893 "Energy saving monitor reference (motor capacity)".
- As shown below, the consumed power ratio (%) during commercial power supply operation is estimated from the rotations per minute ratio for each operation pattern and rating (current output frequency/Pr. 3 "Base frequency").

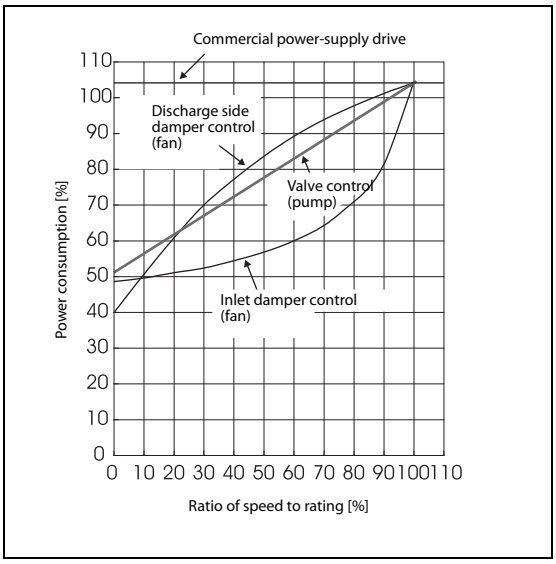


***Fig. 5-156:***
*Characteristic of the power consumption*

- The estimated value of the consumed power during commercial power supply operation [kW] is calculated from the motor capacity set in Pr. 893 and Pr. 892 "Load factor" with the following formula.

$$\text{Estimated consumed power during commercial power supply operation [kW]} = \text{Pr. 893 [kW]} \times \frac{\text{Consumed power [\%]}}{100} \times \frac{\text{Pr. 892 [\%]}}{100}$$

**NOTE** In commercial power supply operation, because the rotations per minute cannot rise higher than the power supply frequency, if the output frequency rises to Pr. 3 "Base frequency" or higher, it stays at a constant value.

**Annual power saving amount and power cost savings (Pr. 899)**

- When the operation time rate [%] (ratio of time in year that the inverter actually drives the motor) is set in Pr. 899, the annual energy saving effect can be estimated.
- When the operation pattern is determined to a certain extent, the estimated value of the annual power saving amount can be calculated by measuring the power saving in a certain measurement period.
- Refer to the following to set the operation time rate.

① Estimate the average time of operation per day [h/day].

② Calculate the number of operation days per year [days/year].
(Average number of operation days per month × 12 months)

③ Calculate the annual operation time [h/year] from ① and ②.
Annual operation time [h/year] = average time [h/day] × number of operation days [days/year]

④ Calculate the operation time rate and set it in Pr. 899.

$$\text{Operation time rate (\%)} = \frac{\text{Annual operation time [h/year]}}{\text{24 [h/day]} \times \text{365 [days/year]}} \times \text{100 [\%]}$$

**Example ▽** Setting example for operation time rate:
When operation is performed about 21 h per day for an average 16 operation days per month:

Annual operation time = 21 [h/day] × 16 [days/month] × 12 months = 4032 [h/year]

$$\text{Operation time rate [\%]} = \frac{\text{4032 [h/year]}}{\text{24 [h/day]} \times \text{365 [days/year]}} \times \text{100 [\%]} = \underline{46.03\%}$$

Set 46.03% in Pr. 899.

△

- Calculate the annual power saving amount from Pr. 899 "Operation time rate (estimated value)" and the average power saving monitor.

$$\text{Annual power saving amount [kWh/year]} = \text{With Pr. 898 = 10 or 9999, average power saving [kW] during cumulative} \times \text{24 h} \times \text{365 days} \times \frac{\text{Pr. 899}}{100}$$

- When the power cost per hour is set in Pr. 896 "Power unit cost", the annual power cost savings can be monitored.

Annual power cost saving = Annual power saving amount [kWh/year] × Pr. 896

**NOTE** During regenerative driving, make calculation on the assumption that "power saving = power during commercial power supply operation (input power = 0)".

| Parameters referred to | | | |
|---|---|---|---|
| Pr. 3 | Base frequency | => | page 5-631 |
| Pr. 52 | Operation panel main monitor selection | => | page 5-317 |
| Pr. 54 | FM/CA terminal function selection | => | page 5-330 |
| Pr. 158 | AM terminal function selection | => | page 5-330 |

## 5.11.6 Output terminal function selection

Use the following parameters to change the functions of the open collector output terminals and relay output terminals.

| Pr. | Name | | Initial value | Initial set signal | Setting range |
|---|---|---|---|---|---|
| 190 M400 | RUN terminal function selection | Open collector output terminal | 0 | RUN (Inverter running) | 0 to 8, 10 to 20, 22, 25 to 28, 30 to 36, 38 to 54, 56, 57, 60, 61, 63, 64, 68, 70, 79, 84, 85, 90 to 99, 100 to 108, 110 to 116, 120, 122, 125 to 128, 130 to 136, 138 to 154, 156, 157, 160, 161, 163, 164, 168, 170, 179, 184, 185, 190 to 199, 200 to 208, 300 to 308, 9999 |
| 191 M401 | SU terminal function selection | | 1 | SU (Up to frequency) | |
| 192 M402 | IPF terminal function selection | | 2 ① | IPF (Instantaneous power failure/ undervoltage) | |
| | | | 9999 ② | | |
| 193 M403 | OL terminal function selection | | 3 | OL (Overload warning) | |
| 194 M404 | FU terminal function selection | | 4 | FU (Output frequency detection) | |
| 195 M405 | ABC1 terminal function selection | Relay output terminal | 99 | ALM (Fault) | 0 to 8, 10 to 20, 22, 25 to 28, 30 to 36, 38 to 54, 56, 57, 60, 61, 63, 64, 68, 70, 79, 84, 85, 90, 91, 94 to 99, 100 to 108, 110 to 116, 120, 122, 125 to 128, 130 to 136, 138 to 154, 156, 157, 160, 161, 163, 164, 168, 170, 179, 184, 185, 190, 191, 194 to 199, 200 to 208, 300 to 308, 9999 |
| 196 M406 | ABC2 terminal function selection | | 9999 | No function | |

① The initial value is for standard models and IP55 compatible models.

② The initial value is for separated converter types.

| Pr. | Name | Initial value | Setting range | Description |
|---|---|---|---|---|
| 289 M431 | Inverter output terminal filter | 9999 | 5 to 50 ms | Set the time delay for the output terminal response. |
| | | | 9999 | No output terminal filter. |

### Output signal list

- The functions of the output terminals can be set.
- Refer to the following table and set each parameter.
  (0 to 99: Positive logic, 100 to 199: Negative logic)

| Setting | | Signal name | Function | Operation | Related parameter | Refer to page |
|---|---|---|---|---|---|---|
| Positive logic | Negative logic | | | | | |
| 0 | 100 | RUN | Inverter running | Output during operation when the inverter output frequency reaches Pr. 13 "Starting frequency" or higher. | — | 5-356 |
| 1 | 101 | SU | Up to frequency ① | Output when the output frequency reaches the set frequency. | Pr. 41 | 5-361 |
| 2 | 102 | IPF | Instantaneous power failure/undervoltage ④ | Output when an instantaneous power failure or undervoltage protection operation occurs. | Pr. 57 | 5-540, 5-549 |
| 3 | 103 | OL | Overload warning | Output during operation of the stall prevention function. | Pr. 22, Pr. 23, Pr. 66, Pr. 148, Pr. 149, Pr. 154 | 5-83 |
| 4 | 104 | FU | Output frequency detection | Output when the output frequency reaches the frequency set in Pr. 42 (Pr. 43) during reverse rotation) or higher. | Pr. 42, Pr. 43 | 5-361 |
| 5 | 105 | FU2 | Second output frequency detection | Output when the output frequency reaches the frequency set in Pr. 50 or higher. | Pr. 50 | 5-361 |
| 6 | 106 | FU3 | Third output frequency detection | Output when the output frequency reaches the frequency set in Pr. 116 or higher. | Pr. 116 | 5-361 |
| 7 | 107 | RBP | Regenerative brake pre-alarm ② | Output when 85% of the regenerative brake duty set in Pr. 70 is reached. | Pr. 70 | 5-652 |
| 8 | 108 | THP | Electronic thermal O/L relay pre-alarm | Output when the cumulative electronic thermal O/L relay value reaches 85% of the trip level. (Electronic thermal O/L relay protection (E.THT/E.THM) is activated when the value reaches 100%.) | Pr. 9 | 5-284 |
| 10 | 110 | PU | PU operation mode | Output when PU operation mode is selected. | Pr. 79 | 5-255 |
| 11 | 111 | RY | Inverter operation ready | Output when the reset process is completed after powering ON the inverter (when starting is possible by switching the start signal ON or during operation). | — | 5-356 |
| 12 | 112 | Y12 | Output current detection | Output when the output current is higher than the Pr. 150 setting for the time set in Pr. 151 or longer. | Pr. 150, Pr. 151 | 5-365 |
| 13 | 113 | Y13 | Zero current detection | Output when the output current is lower than the Pr. 152 setting for the time set in Pr. 153 or longer. | Pr. 152, Pr. 153 | 5-365 |
| 14 | 114 | FDN | PID lower limit | Output when the value is lower than the lower limit of PID control. | Pr. 127 to Pr. 134, Pr. 575 to Pr. 577 | 5-504 |
| 15 | 115 | FUP | PID upper limit | Output when the value is higher than the upper limit of PID control. | | |
| 16 | 116 | RL | PID forward/reverse rotation output | Output during forward rotation under PID control. | | |
| 17 | — | MC1 | Electronic bypass MC1 | Used when using the electronicbypass function. | Pr. 135 to Pr. 139, Pr. 159 | 5-457 |
| 18 | — | MC2 | Electronic bypass MC2 | | | |
| 19 | — | MC3 | Electronic bypass MC3 | | | |
| 20 | 120 | BOF | Brake opening request | Output to open the brake when the brake PLC function is selected. | Pr. 278 to Pr. 285, Pr. 292 | 5-469 |
| 22 | 122 | BOF2 | Second brake opening request | Output to open the brake when the second brake PL function is selected (RT signal ON). | Pr. 641 to Pr. 649, Pr. 292 | |
| 25 | 125 | FAN | Fan fault output | Output when a fan fault occurs. | Pr. 244 | 5-293 |

***Tab. 5-136:*** *Output terminal function assignment (1)*

| Setting | | Signal name | Function | Operation | Related parameter | Refer to page |
|---|---|---|---|---|---|---|
| Positive logic | Negative logic | | | | | |
| 26 | 126 | FIN | Heatsink overheat pre-alarm | Output when the heatsink temperature reaches about 85% of the heatsink overheat protection operation temperature. | — | 6-22 |
| 27 | 127 | ORA | Orientation complete (for FR-A8AP) ③ | When orientation is enabled. | Pr. 350 to Pr. 366, Pr. 369, Pr. 393, Pr. 396 to Pr. 399 | 5-487 |
| 28 | 128 | ORM | Orientation fault (for FR-A8AP) ③ | | | |
| 30 | 130 | Y30 | Forward rotation output (for FR-A8AP) ③ | Output during motor forward rotation. | — | 5-358 |
| 31 | 131 | Y31 | Reverse rotation output (for FR-A8AP) ③ | Output during motor reverse rotation. | | 5-358 |
| 32 | 132 | Y32 | Regenerative status output (for FR-A8AP) ③ | Output when the regenerative status is entered under vector control. | | 5-359 |
| 33 | 133 | RY2 | Operation ready 2 | Output during pre-excitation or operation under Real sensorless vector control, vector control, and PM sensorless vector control. | — | 5-356 |
| 34 | 134 | LS | Low speed detection | Output when the output frequency drops to the Pr. 865 setting or lower. | Pr. 865 | 5-361 |
| 35 | 135 | TU | Torque detection | Output when the motor torque is higher than the Pr. 864 setting. | Pr. 864 | 5-367 |
| 36 | 136 | Y36 | In-position | Output when the number of droop pulses drops below the setting. | Pr. 426 | 5-173 |
| 38 | 138 | MEND | Travel completed | Output when the droop pulse is within the in-position width, and the position command operation is not completed or performing home position return. | Pr. 426 | 5-173 |
| 39 | 139 | Y39 | Start time tuning completion | Output when tuning is completed during start-up. | Pr. 95, Pr. 574 | 5-451 |
| 40 | 140 | Y40 | Trace status | Output during trace operation. | Pr. 1020 to Pr. 1047 | 5-568 |
| 41 | 141 | FB | Speed detection | Output when the actual motor rotations per minute (estimated rotations per minute) reaches Pr. 42 (Pr. 50, Pr. 116). | Pr. 42, Pr. 50, Pr. 116 | 5-361 |
| 42 | 142 | FB2 | Second speed detection | | | |
| 43 | 143 | FB3 | Third speed detection | | | |
| 44 | 144 | RUN2 | Inverter running 2 | Output while the forward rotation or reverse rotation signal is ON.<br>Output during deceleration even while the forward rotation or reverse rotation signal is OFF. (Not output while pre-excitation LX is ON.)<br>Output also while the orientation command (X22) signal is ON.<br>Under position control, turns ON when the servo is turned ON (LX ON). (Turns OFF when the servo turned is OFF (LX OFF)). | — | 5-356 |
| 45 | 145 | RUN3 | Inverter running and start command is ON | Output while the inverter is running and the start command is ON. | — | 5-356 |
| 46 | 146 | Y46 | During deceleration at occurrence of power failure (retained until release) ④ | Output after the power-failure deceleration function operates. (Retained until canceled.) | Pr. 261 to Pr. 266 | 5-558 |
| 47 | 147 | PID | During PID control activated | Output during PID control. | Pr. 127 to Pr. 134, Pr. 575 to Pr. 577 | 5-504 |
| 48 | 148 | Y48 | PID deviation limit | Output when the absolute deviation value exceeds the limit value. | Pr. 127 to Pr. 134, Pr. 553, Pr. 554 | 5-504 |

***Tab. 5-136:*** *Output terminal function assignment (2)*

| Setting | | Signal name | Function | Operation | Related parameter | Refer to page |
|---|---|---|---|---|---|---|
| Positive logic | Negative logic | | | | | |
| 49 | 149 | Y49 | During pre-charge operation | Output during pre-charge operation. | Pr. 127 to Pr. 134, Pr. 241, Pr. 553, Pr. 554, Pr. 575 to Pr. 577, Pr. 753 to Pr. 769, C42 to C45 | 5-525 |
| 50 | 150 | Y50 | During second pre-charge operation | | | |
| 51 | 151 | Y51 | Pre-charge time over | Output when the pre-charge operation reaches the time limit set in Pr. 764 or Pr. 769. | | |
| 52 | 152 | Y52 | Second pre-charge time over | | | |
| 53 | 153 | Y53 | Pre-charge level over | Output when the measured value before reaching the ending time during pre-charge operation is higher than the detection level set in Pr. 763 or Pr. 768. | | |
| 54 | 154 | Y54 | Second pre-charge level over | | | |
| 56 | 156 | ZA | Home position return failure | Output while a home position return failure warning is occurring. | — | 5-129 |
| 57 | 157 | IPM | During PM sensorless vector control | Output while the control method is PM sensorless vector control. | Pr. 71, Pr. 80, Pr. 998 | 5-69 |
| 60 | 160 | FP | Position detection level | Output when the current position exceeds the position detection judgment value (Pr. 1294 and Pr. 1295). | Pr. 1294 to Pr. 1297 | 5-173 |
| 61 | 161 | PBSY | During position command operation | Output during position command operation. | — | 5-129 |
| 63 | 163 | ZP | Home position return completed | Output after home position return is completed. | | |
| 64 | 164 | Y64 | Control circuit capacitor life | Output during retry processing. | Pr. 65 to Pr. 69 | 5-297 |
| 68 | 168 | EV | 24 V external power supply operation | Output while operating with a 24 V power supply input from an external source. | — | 2-51 |
| 70 | 170 | SLEEP | PID output interruption | Output during PID output suspension function operation. | Pr. 127 to Pr. 134, Pr. 575 to Pr. 577 | 5-504 |
| 79 | 179 | Y79 | Pulse train output of output power | Output in pulses every time the accumulated output power of the inverter reaches the Pr. 799 setting. | Pr. 799 | 5-374 |
| 84 | 184 | RDY | Position control preparation ready (for FR-A8AP) ③ | Output when the operation is set ready by servo ON (LX ON) | Pr. 419, Pr. 428 to Pr. 430 | 5-167 |
| 85 | 185 | Y85 | DC current feeding ④ | Output when there is a power failure or undervoltage for the AC current. | Pr. 30, Pr. 70 | 5-652 |
| 86 | 186 | Y86 | Control circuit capacitor life (for FR-A8AY, FR-A8AR) ③ | Output when the control circuit capacitor approaches the end of its life. | Pr. 255 to Pr. 259 | 5-214 |
| 87 | 187 | Y87 | Main circuit capacitor life (for FR-A8AY, FR-A8AR) ③ ④ | Output when the main circuit capacitor approaches the end of its life. | | |
| 88 | 188 | Y88 | Cooling fan life (for FR-A8AY, FR-A8AR) ③ | Output when the cooling fan approaches the end of its life. | | |
| 89 | 189 | Y89 | Inrush current limit circuit life (for FR-A8AY, FR-A8AR) ③ ④ | Output when the inrush current limit circuit approaches the end of its life. | | |
| 90 | 190 | Y90 | Life alarm | Output when any of the control circuit capacitor, main circuit capacitor and inrush current limit circuit or the cooling fan approaches the end of its life. | | |
| 91 | 191 | Y91 | Fault output 3(power-OFF signal) | Output when an error occurs due to an inverter circuit fault or connection fault. | — | 5-360 |
| 92 | 192 | Y92 | Energy saving average value updated timing | Switches between ON and OFF each time the average power saving is updated when using the power saving monitor. This cannot be set in Pr. 195 or Pr. 196,Pr. 320 to Pr. 322 (relay output terminal). | Pr. 52, Pr. 54, Pr. 158, Pr. 891 to Pr. 899 | 5-182 |

***Tab. 5-136:*** *Output terminal function assignment (3)*

| Setting | | Signal name | Function | Operation | Related parameter | Refer to page |
|---|---|---|---|---|---|---|
| Positive logic | Negative logic | | | | | |
| 93 | 193 | Y93 | Current average monitor signal | Outputs the average current and maintenance timer value as a pulse. This cannot be set in Pr. 195 or Pr. 196, Pr. 320 to Pr. 322 (relay output terminal). | Pr. 555 to Pr. 557 | 5-221 |
| 94 | 194 | ALM2 | Fault output 2 | Output when the inverter's protective function is activated to stop the output (at fault occurrence). The signal output continues even during an inverter reset, and the signal output stops after the reset release. ⑤ | — | 5-360 |
| 95 | 195 | Y95 | Maintenance timer signal | Output when Pr. 503 reaches the Pr. 504 setting or higher. | Pr. 503, Pr. 504 | 5-219 |
| 96 | 196 | REM | Remote output | Output via terminals when certain parameters are set. | Pr. 495 to Pr. 497 | 5-368 |
| 97 | 197 | ER | Alarm output 2 | When Pr. 875 = "0" (initial value), output in the same way as the ALM signal. When Pr. 875 = "1", if OHT/THM/PTC occurs, the signal is output, and deceleration to a stop is performed at the same time. When other protective functions operate, output when output is stopped. | Pr. 875 | 5-292 |
| 98 | 198 | LF | Alarm | Output when an alarm (fan fault or communication error warning) occurs. | Pr. 121, Pr. 244 | 5-293, 5-583 |
| 99 | 199 | ALM | Fault | Output when the inverter's protective function is activated to stop the output (at fault occurrence). The signal output is stopped after a reset. | — | 5-360 |
| 200 | 300 | FDN2 | Second PID lower limit | Output when the value is lower than the lower limit of second PID control. | Pr. 753 to Pr. 758 | 5-504 |
| 201 | 301 | FUP2 | Second PID upper limit | Output when the value is higher than the upper limit of second PID control. | | |
| 202 | 302 | RL2 | Second PID forward/ reverse rotation output | Output during forward rotation under second PID control. | Pr. 753 to Pr. 758 | |
| 203 | 303 | PID2 | Second During PID control activated | Output during second PID control. | | |
| 204 | 304 | SLEEP2 | During second PID output shutoff | Output during second PID output suspension function operation. | Pr. 753 to Pr. 758, Pr. 1147 to Pr. 1149 | |
| 205 | 305 | Y205 | Second PID deviation limit | Output when the absolute deviation value during second PID control exceeds the limit value. | Pr. 753 to Pr. 758, Pr. 1145, Pr. 1146 | |
| 206 | 306 | Y206 | Cooling fan operation command signal | Output when the cooling fan operation is commanded. | Pr. 244 | 5-293 |
| 207 | 307 | Y207 | Control circuit temperature signal | Output when the temperature of the control circuit board reaches the detection level or higher. | Pr. 663 | |
| 208 | 308 | PS | PU stopped signal | Output while the PU is stopped. | Pr. 75 | 5-184 |
| 9999 | | — | No function | — | — | — |

***Tab. 5-136:*** *Output terminal function assignment (4)*

① Take caution when changing the frequency setting with an analog signal or the setting dial of the operation panel (FR-DU08), because this change speed and the timing of the change speed determined by the acceleration/deceleration time setting may cause the output of the SU (up to frequency) signal to switch repeatedly between ON and OFF. (This repeating does not occur when the acceleration/deceleration time setting is "0 s".)

② The setting is available only for standard models.

③ Available when the plug-in option is connected.

④ The setting is available only for standard models and IP55 compatible models.

⑤ When the power is reset, the fault output 2 signal (ALM2) turns OFF at the same time as the power turns OFF.

**NOTES**

The same function may be set to more than one terminal

The terminal conducts during function operation when the setting is "0 to 99, 200 to 299", and does not conduct when the setting is "100 to 199, 300 to 399".

When Pr. 76 "Fault code output selection" = "1", the output signals of terminals SU, IPF, OL and FU operate according to Pr. 76 setting. (When the inverter's protective function is activated, the signal output switches to fault code output.)

The outputs of terminal RUN and the fault output relay are assigned according to the settings above, regardless of Pr. 76.

Changing the terminal assignment using Pr. 190 to Pr. 196 (output terminal function selection) may affect the other functions. Set parameters after confirming the function of each terminal.

Do not assign signals which repeat frequently between ON and OFF to terminals A1B1C1 or A2B2C2. The life of the relay contacts will be shortened.

**Adjusting the output terminal response level (Pr. 289)**

The response level of the output terminals can be delayed in a range of 5 to 50 ms. (Operation example for the RUN signal.)

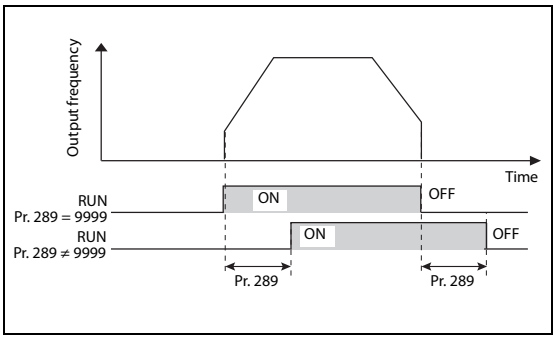


***Fig. 5-157:***
*Adjusting the RUN signal response level*

**NOTES**

When Pr. 157 "OL signal output timer" is set for the Overload warning (OL) signal output, the OL signal is output when the set time of (Pr. 157 + Pr. 289) elapses.

For the output signal and the fault code output (on page 5-370) used in the PLC function (on page 5-564), the Pr. 289 setting is invalid (no filter).

**Inverter operation ready signals (RY, RY2 signals)**
**and inverter running signals (RUN, RUN2, RUN3 signals)**

● Operation under V/F control and Advanced magnetic flux vector control

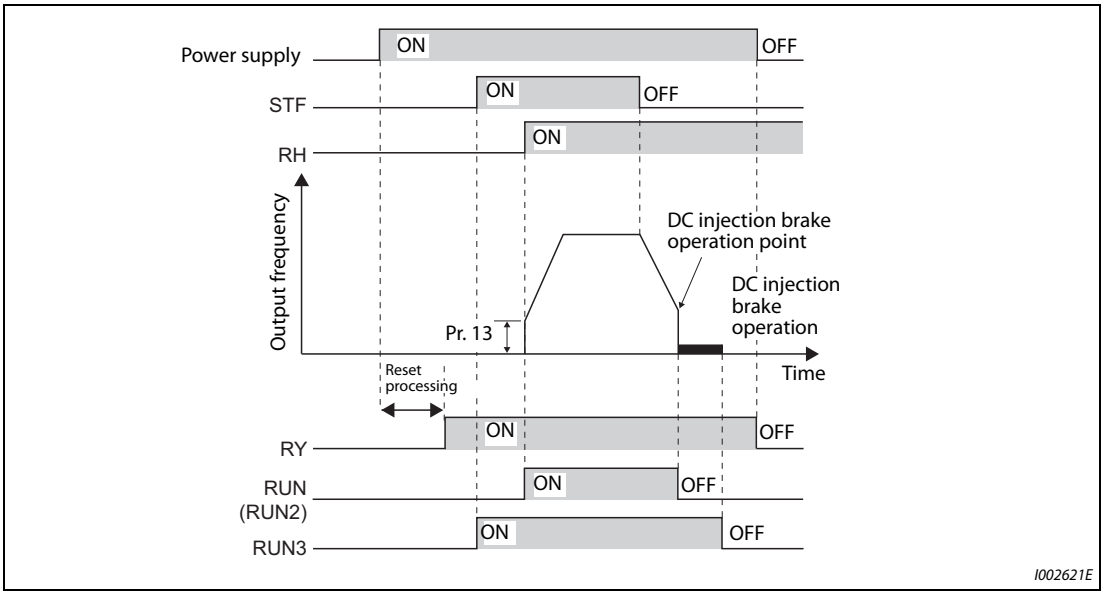


***Fig. 5-158:*** *Ready and motor running signals*

– When the inverter is ready for operation, the Inverter operation ready (RY) signal turns ON (stays ON during operation.)

– When the inverter output frequency reaches Pr. 13 "Starting frequency" or higher, the Inverter running (RUN, RUN2) signals turn ON. The signal is OFF while the inverter is stopped and during DC injection brake operation. Inverter

– The Inverter running and start command is ON (RUN3) signal is ON while the inverter is running or the start signal is ON. (When the start command is ON, the RUN3 signal output turns ON even while the inverter's protective function is activated or the MRS is ON.) During DC injection brake operation as well, the output is ON, and when the inverter stops, it turns OFF.

● According to the inverter condition, the ON/OFF operation of each signal is as shown below.

| Output signal | Start signal OFF (during stop) | Start signal ON (during stop) | Start signal ON (running) | DC injection brake operation | Output shutoff ② | | Automatic restart after instantaneous power failure | | |
|---|---|---|---|---|---|---|---|---|---|
| | | | | | | | Coasting | | Restart-ing |
| | | | | | Start signal ON | Start signal OFF | Start signal ON | Start signal OFF | |
| RY ③ | ON | ON | ON | ON | OFF | | ON ① | | ON |
| RY2 | OFF | OFF | OFF | OFF | OFF | | OFF | | OFF |
| RUN | OFF | OFF | ON | OFF | OFF | | OFF | | ON |
| RUN2 | OFF | OFF | ON | OFF | OFF | | OFF | | ON |
| RUN3 | OFF | ON | ON | ON | ON | OFF | ON | OFF | ON |

***Tab. 5-137:*** *Output signal output*

① OFF during power failure or undervoltage.
② Output is shutoff in conditions like a fault and when the MRS signal is ON.
③ OFF while power is not supplied to the main circuit power supply.

● Operation under Real sensorless vector control, vector control and PM sensorless vector control

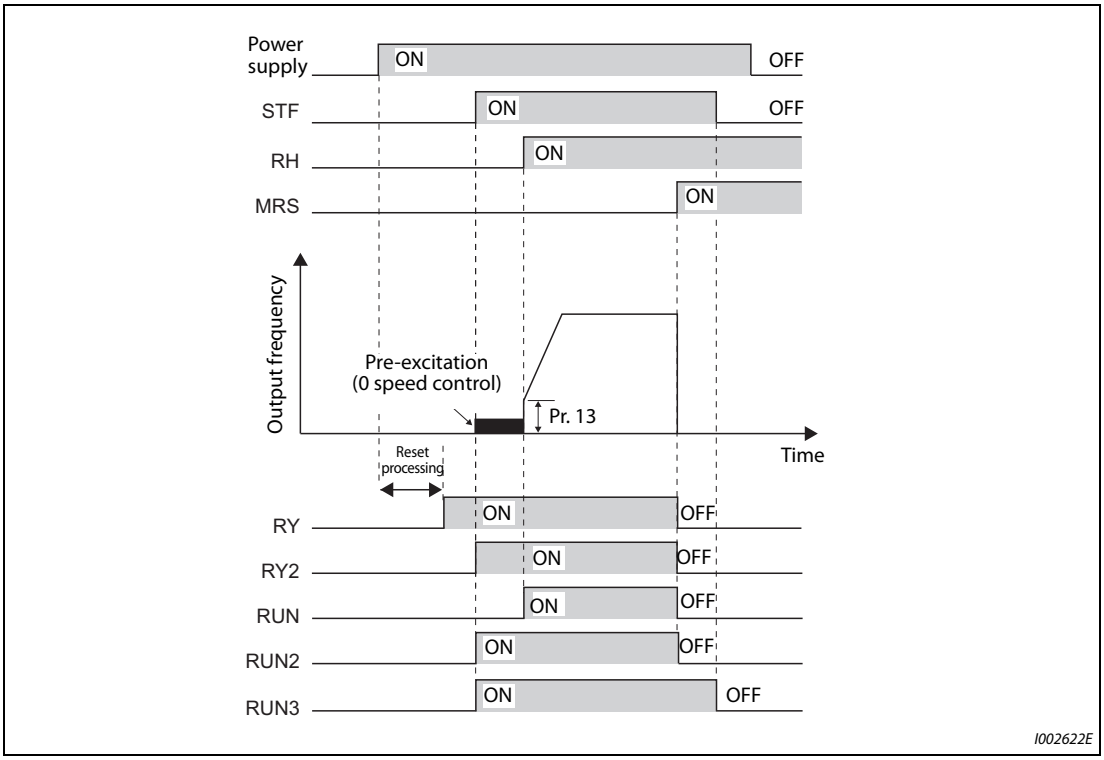


***Fig. 5-159:*** *Ready and motor running signals*

– When the inverter is ready for operation, the Inverter operation ready (RY) signal turns ON. (stays ON during operation.)

– When the inverter output frequency reaches Pr. 13 "Starting frequency" or higher, the output of Inverter running (RUN) turns ON. The signal is OFF while the inverter is stopped, the DC injection brake is operating, during tuning at start-up, or during pre-excitation.

– The Inverter running 2 (RUN2) signal is ON while the inverter is running or the start signal is ON. (When the inverter's protective function is activated or the MRS is ON, the RUN2 signal turns OFF.)

– The Inverter running and start command is ON (RUN3) signal output is ON while the inverter is running or the start signal is ON.

– The RUN2 and RUN3 signals also are ON when the start command is ON and when pre-excitation is operating with the speed command = 0. (However, the RUN2 signal is OFF during pre-excitation operation activated by LX signal ON.)

– The Operation ready 2 (RY2) signal turns ON when the pre-excitation starts. It stays ON while pre-excitation is operating even when the inverter is stopped.

**NOTE**

When pre-excitation is activated by the pre-excitation signal (LX), the RY2 signal turns ON 100 ms (500 ms for FR-A820-03800(75K) or higher, FR-A840-02160(75K) or higher) after the LX signal turns ON. (When online auto tuning at start-up (Pr. 95 = "1") is selected, the ON timing is delayed by the tuning time.)

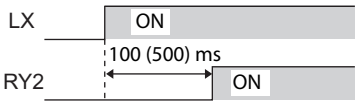

● According to the inverter condition, the ON/OFF operation of each signal is as shown below.

| Output signal | Start signal OFF (during stop) | Start signal ON ① (pre-excitation) | Start signal ON (running) | LX signal ON (pre-excitation) | DC injection brake operating (pre-excitation) | Output shutoff ⑤ | | Automatic restart after instantaneous power failure | | |
|---|---|---|---|---|---|---|---|---|---|---|
| | | | | | | | | Coasting | | Restarting |
| | | | | | | Start signal ON | Start signal OFF | Start signal ON | Start signal OFF | |
| RY ⑥ | ON | ON | ON | ON | ON | OFF | | ON ② | | ON |
| RY2 | OFF | ON | ON | ON ③ | ON | OFF | | OFF | | OFF |
| RUN | OFF | OFF | ON | OFF ④ | OFF | OFF | | OFF | | ON |
| RUN2 | OFF | ON | ON | OFF ④ | OFF | OFF | | OFF | | ON |
| RUN3 | OFF | ON | ON | ON | ON | ON | OFF | ON | OFF | ON |

***Tab. 5-138:*** *Output signal output*

① When the start signal is ON and the frequency command is 0 Hz, pre-excitation is entered.

② Turns OFF during power failure or undervoltage.

③ A delay of 100 ms (500 ms for FR-A820-03800(75K) or higher, FR-A840-02160(75K) or higher) occurs when turned ON.

④ Turns ON while the servo is ON (LX signal ON) under position control.

⑤ Output is shutoff in conditions like a fault and when the MRS signal is ON.

⑥ OFF while power is not supplied to the main circuit power supply.

● When using the RY, RY2, RUN, RUN2 and RUN3 signals, refer to the following and assign the functions by Pr. 190 to Pr. 196 (output terminal function selection).

| Output signal | Pr. 190 to Pr. 196 settings | |
|---|---|---|
| | Positive logic | Negative logic |
| RY | 11 | 111 |
| RY2 | 33 | 133 |
| RUN | 0 | 100 |
| RUN2 | 44 | 144 |
| RUN3 | 45 | 145 |

***Tab. 5-139:*** *Assignment of the signals*

**NOTE** The RUN signal (positive logic) is assigned to the terminal RUN in the initial status.

**Forward rotation and reverse rotation signals (Y30 and Y31)**

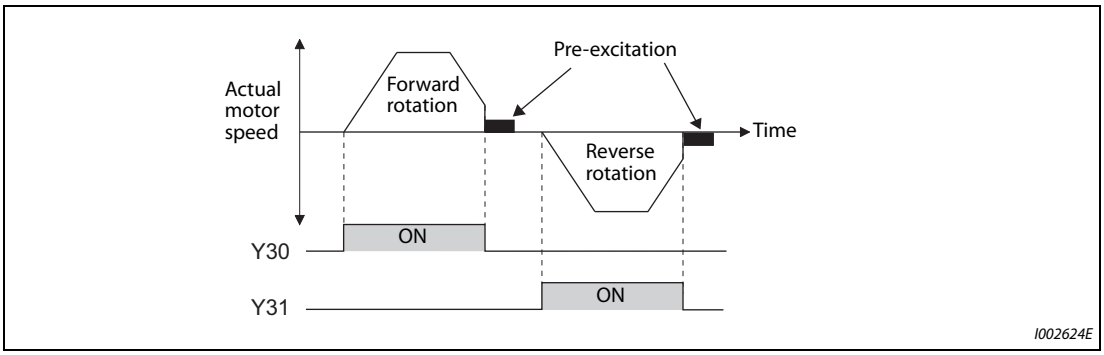


***Fig. 5-160:*** *Forward and reverse rotation of the motor*

- Under vector control, a Forward rotation output (Y30) signal or Reverse rotation output (Y31) signal is output according to the actual rotation of the motor.
- During pre-excitation (zero speed, servo lock) under speed control or torque control, Y30 and Y31 are OFF. Note that during servo lock under position control, the output is according to the motor rotation, the same as during operation.
- To use the Y30 signal, set "30 (positive logic) or 130 (negative logic)" in any of Pr. 190 to Pr. 196 (output terminal function selection) to assign the function to the output terminal.
- To use the Y31 signal, set "31 (positive logic) or 131 (negative logic)" in any of Pr. 190 to Pr. 196 (output terminal function selection) to assign the function to the output terminal.

**NOTES**

Always OFF under V/F control, Advanced magnetic flux vector control, Real sensorless vector control, and PM sensorless vector control.

If the motor is rotated by an external force or other cause while the inverter is stopped, Y30 and Y31 stay OFF.

**Regenerative status output signal (Y32)**

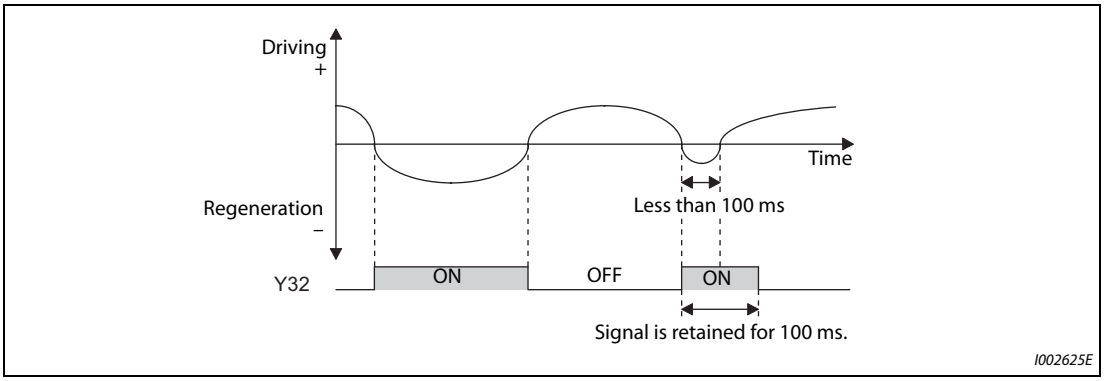


***Fig. 5-161:*** *Forward and reverse rotation of the motor*

- When the motor is in the regenerative status (motor is in the dynamic braking status) under vector control, the Regenerative status output (Y32) signal turns ON. Once it turns ON, the signal is retained for at least 100 ms.
- The signal turns OFF during a stop or pre-excitation.
- To use the Y32 signal, set "32 (positive logic) or 132 (negative logic)" in any of Pr. 190 to Pr. 196 (output terminal function selection) to assign the function to the output terminal.

**NOTES**

Always OFF under V/F control, Advanced magnetic flux vector control, Real sensorless vector control, and PM sensorless vector control.

### Fault output signals (ALM, ALM2)

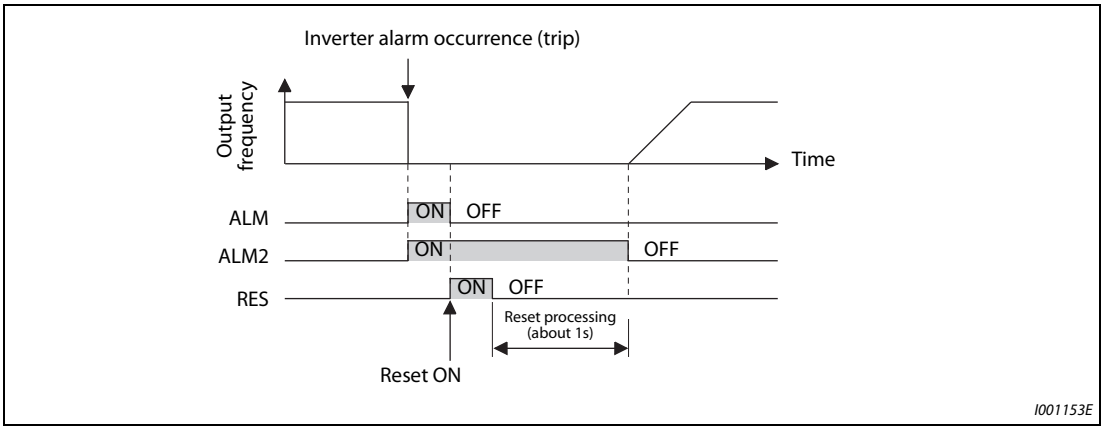


***Fig. 5-162:*** *Fault signals*

- The Fault (ALM, ALM2) signals are output when the inverter protective function is activated.
- The ALM2 signal stays ON during the reset period after the fault occurs.
- To use the ALM2 signal, set "94 (positive logic) or 194 (negative logic)" in any of Pr. 190 to Pr. 196 (output terminal function selection) to assign the function to the output terminal.
- The ALM signal is assigned to the A1B1C1 contacts in the initial status.

**NOTE** For the inverter fault details, refer to page 6-9.

### Input MC shutoff signal (Y91)

- The Fault output 3 (Y91) signal is output when a fault originating in the inverter circuit or a connection fault occurs.
- To use the Y91 signal, set "91 (positive logic) or 191 (negative logic)" in any of Pr. 190 to Pr. 196 (output terminal function selection) to assign the function to the output terminal.
- The following table shows the faults that output the Y91 signal. (For the fault details, refer to page 6-9.)

| Fault record |
|---|
| Inrush current limit circuit fault (E.IOH) |
| CPU fault (E.CPU) |
| CPU fault (E.5) |
| CPU fault (E.6) |
| CPU fault (E.7) |
| Parameter storage device fault (E.PE) |
| Parameter storage device fault (E.PE2) |
| 24 V DC power fault (E.P24) |
| Operation panel power supply short circuit<br>RS-485 terminal power supply short circuit (E.CTE) |
| Output side earth (ground) fault overcurrent (E.GF) |
| Output phase loss (E.LF) |
| Brake transistor alarm detection (E.BE) |
| Internal circuit fault(E.13/E.PBT) |

***Tab. 5-140:*** *Faults that lead to Y91 signal output*

| Parameters referred to | | | |
|---|---|---|---|
| Pr. 13 | Starting frequency | => | page 5-243, page 5-245 |
| Pr. 76 | Fault code output selection | => | page 5-373 |

## 5.11.7 Output frequency detection

The inverter output frequency is detected and output as output signals.

| Pr. | Name | Initial value | | Setting range | Description |
|---|---|---|---|---|---|
| | | FM | CA | | |
| 41<br>M441 | Up-to-frequency sensitivity | 10% | | 0 to 100% | Set the level where the SU signal turns ON. |
| 42<br>M442 | Output frequency detection | 6 Hz | | 0 to 590 Hz | Set the frequency where the FU (FB) signal turns ON. |
| 43<br>M443 | Output frequency detection for reverse rotation | 9999 | | 0 to 590 Hz | Set the frequency where the FU (FB) signal turns ON in reverse rotation. |
| | | | | 9999 | Same as the Pr. 42 setting. |
| 50<br>M444 | Second output frequency detection | 30 Hz | | 0 to 590 Hz | Set the frequency where the FU2 (FB2) signal turns ON. |
| 116<br>M445 | Third output frequency detection | 60 Hz | 50 Hz | 0 to 590 Hz | Set the frequency where the FU3 (FB3) signal turns ON. |
| 865<br>M446 | Low speed detection | 1.5 Hz | | 0 to 590 Hz | Set the frequency where the LS signal turns ON. |
| 870<br>M400 | Speed detection hysteresis | 0 Hz | | 0 to 5 Hz | Set the hysteresis width for the detected frequency. |

**Output up-to-frequency sensitivity (SU signal, Pr. 41)**

- Up to frequency (SU) is output when the output frequency reaches the set frequency.
- The Pr. 41 value can be adjusted within the range ±1% to ±100% considering the set frequency as 100%.
- This parameter can be used to check that the set frequency has been reached, and provide signals such as the operation start signal for related equipment.

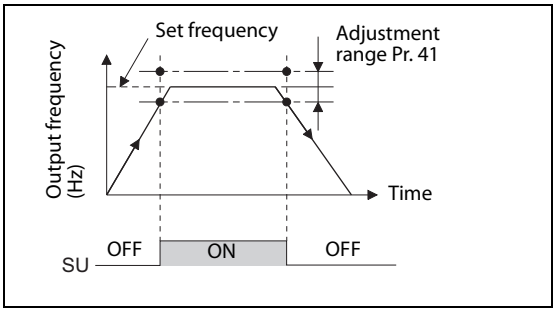


***Fig. 5-163:***
*Output of the SU signal*

I002626E

**Output frequency detection**
**(FU (FB) signal, FU2 (FB2) signal, FU3 (FB3) signal, Pr. 42, Pr. 43, Pr. 50, Pr. 116)**

- Output frequency detection (FU (FB)) is output when the output frequency reaches the Pr. 42 setting or higher.
- The FU (FU2, FU3) signals can be used for electromagnetic brake operation, opening, etc.
- The FU (FU2, FU3) signal is output when the output frequency (frequency command) reaches the set frequency. The FB (FU2, FU3) signal is output when the actual rotation detection speed (estimated speed in Real sensorless vector control, feedback value in vector control) of the motor reaches the set frequency. The FU signal and FB signal are output in the same manner under V/F control, Advanced magnetic flux vector control and encoder feedback control.
- Frequency detection that is dedicated to reverse rotation can be set by setting the detection frequency in Pr. 43. This is useful for changing the timing of the electromagnetic brake operation during forward rotation (lifting) and reverse rotation (lowering) in operations such as lift operation.
- When Pr. 43 ≠ "9999", forward rotation uses the Pr. 42 setting and reverse rotation uses the Pr. 43 setting.
- When outputting a frequency detection signal separately from the FU signal, set the detection frequency in Pr. 50 or Pr. 116. When the output frequency reaches the Pr. 50 setting or higher, the FU2 (FB2) signal is output (when it reaches the Pr. 116 setting or higher, the FU3 (FB3) signal is output).

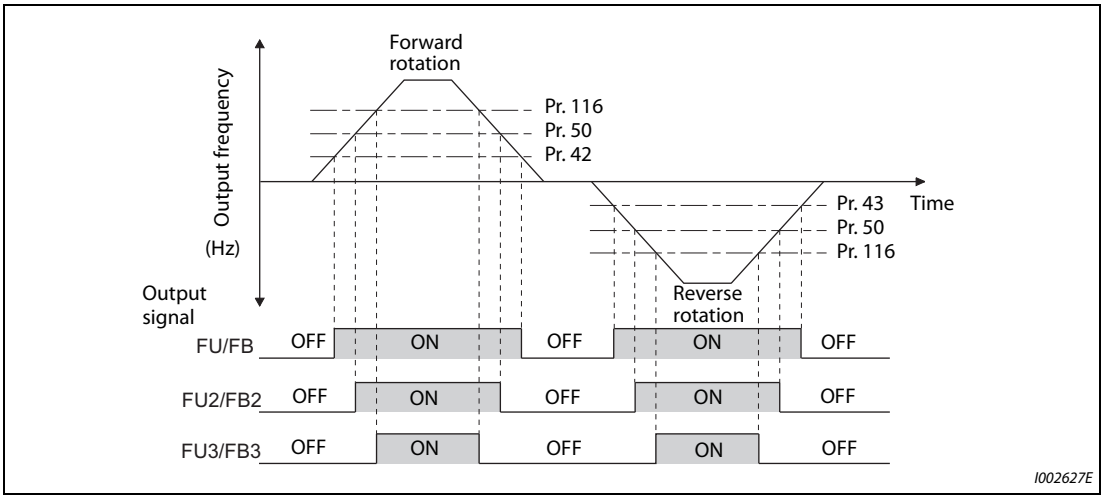


***Fig. 5-164:*** *Frequency detection for forward and reverse rotation*

- For each signal, refer to the following table and assign the function by Pr. 190 to Pr. 196 (output terminal function selection).

| Pr. | Output signal | Pr. 190 to Pr. 196 settings | |
|---|---|---|---|
| | | Positive logic | Negative logic |
| 42, 43 | FU | 4 | 104 |
| | FB | 41 | 141 |
| 50 | FU2 | 5 | 105 |
| | FB2 | 42 | 142 |
| 116 | FU3 | 6 | 106 |
| | FB3 | 43 | 143 |

***Tab. 5-141:*** *Parameter setting for frequency detection for forward and reverse rotation*

**Low speed detection (LS signal, Pr. 865)**

- When the output frequency (refer to the table below) drops to the Pr. 865 "Low speed detection" setting or lower, the low speed detection signal (LS) is output.
- In speed control under Real sensorless vector control, vector control or PM sensorless vector control, when the frequency drops to the Pr. 865 setting, the output torque exceeds the Pr. 874 "OLT level setting" setting, and this status continues for 3 s, a fault (E.OLT) appears and the inverter output stops.
- For the LS signal, set "34 (positive logic) or 134 (negative logic)" in any of Pr. 190 to Pr. 196 (output terminal function selection) to assign the function to the output terminal.

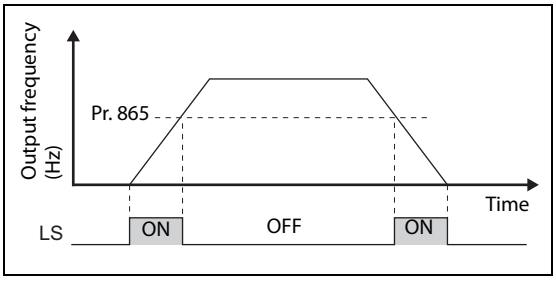


***Fig. 5-165:***
*Low speed detection*

I002628E

**Speed detection hysteresis (Pr. 870)**

- This function prevents chattering of the speed detection signals. When an output frequency fluctuates, the following signals may repeat ON/OFF (chatter):
  - Up to frequency signal (SU)
  - Speed detection signal (FB, FB2, FB3)
  - Low speed output signal (LS)

  Setting hysteresis to the detected frequency prevents chattering of these signals.

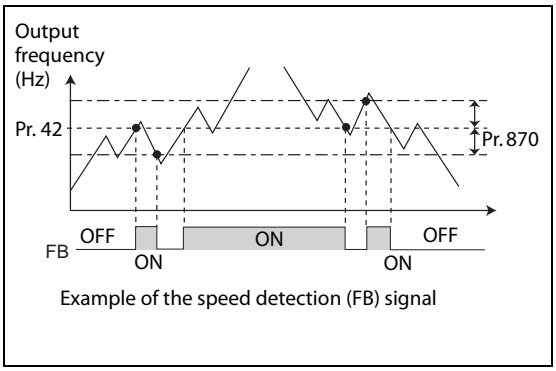


***Fig. 5-166:***
*Output of the speed detection (FB) signal*

I002629E

**NOTES**

In the initial setting, the FU signal is assigned to the terminal FU, and the SU signal is assigned to the terminal SU.

All signals turn OFF during DC injection brake, pre-excitation (zero speed control, servo lock) and tuning at start-up.

Each signal's reference frequency differs by the control method.

| Control method | Compared frequency | |
|---|---|---|
| | FU, FU2, FU3 | FB, FB2, FB3, SU, LS |
| V/F control | Output frequency | Output frequency |
| Advanced magnetic flux vector control | Output frequency before the slip compensation | Output frequency before the slip compensation |
| Real sensorless vector control | Frequency command value | Estimated frequency (estimated from the actual motor speed) |
| Encoder feedback control | Actual motor speed converted as frequency | Actual motor speed converted as frequency |
| vector control | Frequency command value | Actual motor speed converted as frequency |
| PM sensorless vector control | Frequency command value | Estimated frequency (actual motor speed) |

Setting a higher value in Pr. 870 slows the response of frequency detection signals (SU, FB, FB2, FB3, and LS).

The ON/OFF logic for the LS signal is opposite for the FB signal.

Changing the terminal assignment using Pr. 190 to Pr. 196 (output terminal function selection) may affect the other functions. Set parameters after confirming the function of each terminal.

| Parameters referred to | | | |
|---|---|---|---|
| Pr. 190 to Pr. 196 | (output terminal function selection) | => | page 5-350 |
| Pr. 874 | OLT level setting | => | page 5-83 |

## 5.11.8 Output current detection function

The output current during inverter running can be detected and output to the output terminal.

| Pr. | Name | Initial value | Setting range | Description |
|---|---|---|---|---|
| 150<br>M460 | Output current detection level | 150% | 0 to 220% | Set the output current detection level.<br>100% is the rated inverter current. |
| 151<br>M461 | Output current detection signal delay time | 0s | 0 to 10 s | Set the output current detection time. Set the time from when the output current reaches the setting or higher until the output current detection (Y12) signal is output. |
| 152<br>M462 | Zero current detection level | 5% | 0 to 220% | Set the zero current detection level.<br>The rated inverter current is regarded as 100%. |
| 153<br>M463 | Zero current detection time | 0.5s | 0 to 10 s | Set the time from when the output current drops to the Pr. 152 setting or lower until the zero current detection (Y13) signal is output. |
| 166<br>M433 | Output current detection signal retention time | 0.1s | 0 to 10 s | Set the retention time when the Y12 signal is ON. |
| | | | 9999 | Retain the Y12 signal ON status. The signal is turned OFF at the next start. |
| 167<br>M464 | Output current detection operation selection | 0 | 0, 1, 10, 11 | Select the operation at turn on of the Y12 and Y13 signals. |

**Output current detection (Y12 signal, Pr. 150, Pr. 151, Pr. 166, Pr. 167)**

- The output current detection function can be used for purposes such as overtorque detection.
- If the output during inverter running remains higher than the Pr. 150 setting for the time set in Pr. 151 or longer, the Output current detection (Y12) signal is output from the inverter's open collector or relay output terminal.
- When the Y12 signal turns ON, the ON state is retained for the time set in Pr. 166.
- When Pr. 166 = "9999", the ON state is retained until the next start.
- Setting Pr. 167 = "1" while the Y12 signal is ON does not cause E.CDO. The Pr. 167 setting becomes valid after the Y12 signal is turned OFF.
- For the Y12 signal, set "12 (positive logic) or 112 (negative logic)" in any of Pr. 190 to Pr. 196 (output terminal function selection) to assign the function to the output terminal.

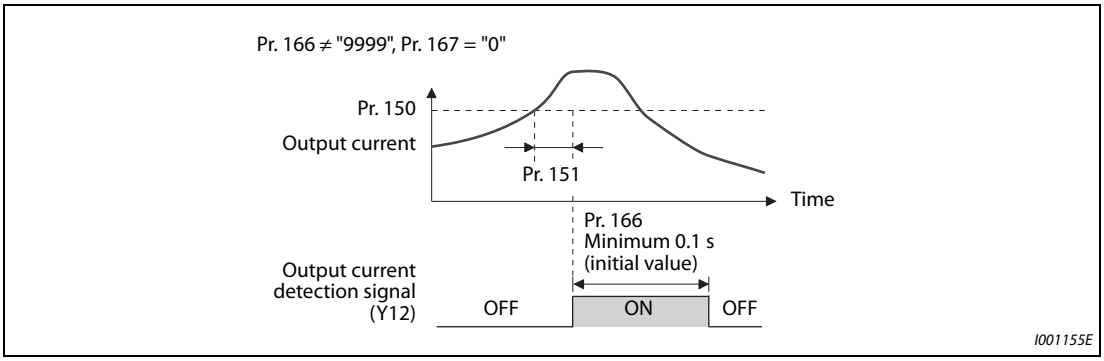


***Fig. 5-167:*** *Output current detection (Pr. 166 ≠9999, Pr. 167 = 0)*

- Select whether the inverter output stops or the inverter operation continues when Y12 signal turns ON, by setting Pr.167.

| Pr. 167 setting | When Y12 signal turns ON | When Y13 signal turns ON |
|---|---|---|
| 0 (Initial value) | Continuous operation | Continuous operation |
| 1 | Inverter trip (E.CDO) | Continuous operation |
| 10 | Continuous operation | Inverter trip (E.CDO) |
| 11 | Inverter trip (E.CDO) | Inverter trip (E.CDO) |

***Tab. 5-142:*** *Selecting the behaviour of the inverter output at switching of Y12 and Y13*

**Zero current detection (Y13 signal, Pr. 152, Pr. 153)**

- If the output during inverter running remains higher than the Pr. 152 setting for the time set in Pr. 153 or longer, the Zero current detection (Y13) signal is output from the inverter's open collector or relay output terminal.
- If the inverter output current drops to "0", because torque is not generated, slippage due to gravity may occur, especially in a lift application.
  To prevent this, the Y13 signal, which closes the mechanical brake at "0" output current, can be output from the inverter.
- For the Y13 signal, set "13 (positive logic) or 113 (negative logic)" in any of Pr. 190 to Pr. 196 (output terminal function selection) to assign the function to the output terminal.
- Select whether the inverter output stops or the inverter operation continues when Y13 signal turns ON, by setting Pr.167.

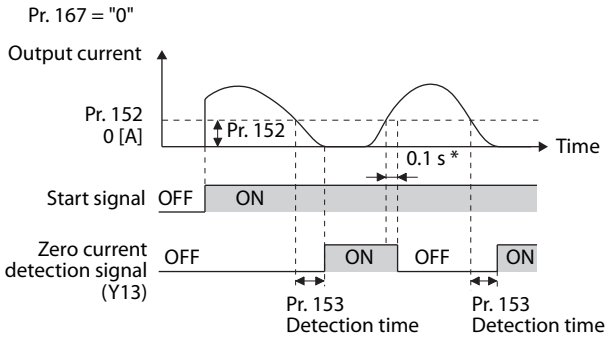


* When the output is restored to the Pr. 152 level, the Y13signal is turned OFF after 0.1 s.

I001156E

***Fig. 5-168:*** *Zero current detection*

**NOTES**

The signals are enabled even when online or offline auto tuning is being executed.

The response time of the Y12 and Y13 signals is approximately 0.1 s. Note that the response time varies with the load.

When Pr. 152 = "0", detection is disabled.

Changing the terminal assignment using Pr. 190 to Pr. 196 (output terminal function selection) may affect the other functions. Set parameters after confirming the function of each terminal.

**CAUTION:**

- ***The zero current detection level setting should not be too low, and the zero current detection time setting not too long. When the output current is low and torque is not generated, the detection signal may not be output.***
- ***Even when using the zero current detection signal, a safety backup such as an emergency brake must be provided to prevent hazardous machine or equipment conditions.***

| Parameters referred to | | | |
|---|---|---|---|
| | Online auto tuning | => | page 5-451 |
| | Offline auto tuning | => | page 5-66, page 5-440 |
| Pr. 190 to Pr. 196 | (output terminal function selection) | => | page 5-350 |

## 5.11.9 Output torque detection Magnetic flux Sensorless Vector

A signal is output when the motor torque is higher than the setting. This function can be used for electromagnetic brake operation, open signal, etc.

| Pr. | Name | Initial value | Setting range | Description |
|---|---|---|---|---|
| 864<br>M470 | Torque detection | 150% | 0 to 400% | Set the torque value where the TU signal turns ON. |

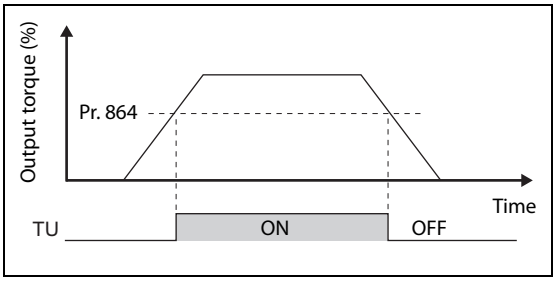


***Fig. 5-169:***
*Torque detection*

- The Torque detection (TU) signal turns ON when the output torque reaches the detection torque value set in Pr. 864 or higher.
- Pr. 864 is not available under V/F control.
- For the TU signal, set "35 (positive logic) or 135 (negative logic)" in one of Pr. 190 to Pr. 196 (output terminal function selection) to assign the function to the output terminal.

**NOTE**

Changing the terminal assignment using Pr. 190 to Pr. 196 (output terminal function selection) may affect the other functions. Set parameters after confirming the function of each terminal.

| Parameters referred to | | | |
|---|---|---|---|
| Pr. 190 to Pr. 196 | (output terminal function selection) | => | page 5-350 |

## 5.11.10 Remote output function

The inverter output signals can be turned ON/OFF like the remote output terminals of a programmable controller.

| Pr. | Name | Initial value | Setting range | Description | |
|---|---|---|---|---|---|
| 495<br>M500 | Remote output selection | 0 | 0 | Remote output data is cleared when the power supply is turned OFF | Remote output data is cleared during an inverter reset |
| | | | 1 | Remote output data is retained when the power supply is turned OFF | |
| | | | 10 | Remote output data is cleared when the power supply is turned OFF | Remote output data is retained during an inverter reset |
| | | | 11 | Remote output data is retained when the power supply is turned OFF | |
| 496<br>M501 | Remote output data 1 | 0 | 0 to 4095 | Set values for the bits corresponding to each output terminal of the inverter output terminal. (Refer to the diagram below.) | |
| 497<br>M502 | Remote output data 2 | 0 | 0 to 4095 | Set values for the bits corresponding to each output terminal of options FR-A8AY and FR-A8AR. (Refer to the diagram below.) | |

**Remote output setting (REM signal, Pr. 496, Pr. 497)**

- The output terminal can be turned ON/OFF with the Pr. 496 and Pr. 497 settings. ON/OFF control can be performed for the remote output terminal via the PU connector, RS-485 terminals and communication option.
- To assign the Remote output (REM) signal to the terminal to be used for remote output, set "96 (positive logic) or 196 (negative logic)" in any of Pr. 190 to Pr. 196 (output terminal function selection).
- Refer to the fig. 5-170, and set "1" in the terminal bit (terminal with the REM signal assigned) of Pr. 496 or Pr. 497 to turn ON the output terminal (OFF when using negative logic). Set "0" to turn OFF the output terminal (ON when using negative logic).
- For example, when Pr. 190 "RUN terminal function selection" = "96" (positive logic) and "1" (H01) is set in Pr. 496, the terminal RUN turns ON.

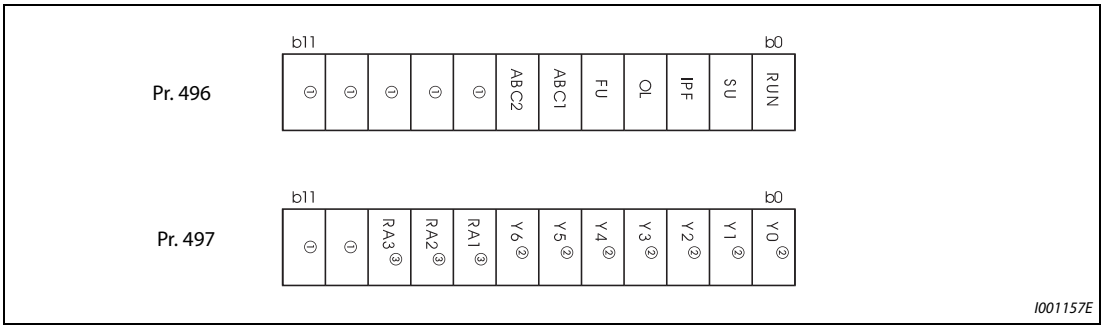


***Fig. 5-170:*** *Remote output data*

① Any value.

② Y0 to Y6 are available when the extension output option (FR-A8AY) is installed.

③ RA1 to RA3 are available hen the relay output option (FR-A8AR) is installed.

**Remote output data retention (REM signal, Pr. 495)**

- If the power supply is reset (including a power failure) while Pr. 495 = "0 (initial value) or 10", t the REM signal output is cleared. (The terminal ON/OFF status is determined by the settings in Pr. 190 to Pr. 196.) "0" is also set in Pr. 496 and Pr. 497.
- When Pr. 495 = "1 or 11", the remote output data is saved in EEPROM before the power supply is turned OFF. This means that the signal output after power restoration is the same as before the power supply was turned OFF. However, when Pr. 495 = "1", the data is not saved during an inverter reset (terminal reset, reset request via communication).
- When Pr. 495 = "10 or 11", the signal before the reset is saved even during an inverter reset.

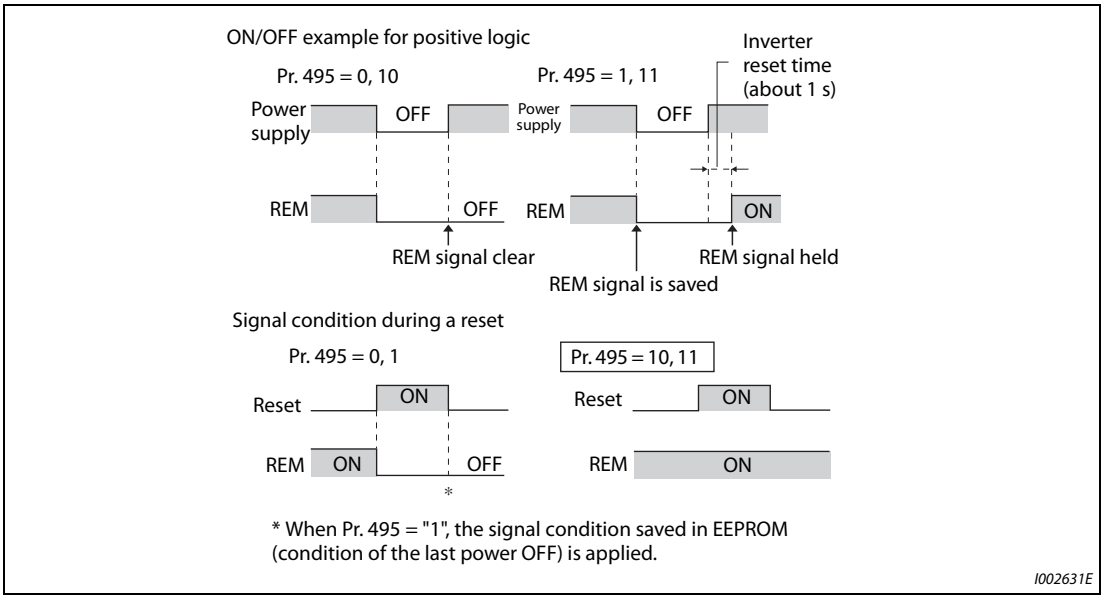


***Fig. 5-171:*** *ON/OFF example for positive logic*

**NOTES**

The output terminals that have not been assigned with a REM signal by Pr. 190 to Pr. 196 do not turn ON/OFF even if "0 or 1" is set in the terminal bits of Pr. 496 and Pr. 497. (ON/OFF is performed with the assigned functions.)

When Pr. 495 = "1 or 11" (remote output data retention at power OFF), take measures such as connecting R1/L11 with P/+, and S1/L21 with N/- so that the control power is retained. If the control power is not retained, the output signal after turning ON the power is not guaranteed to work. When connecting the high power factor converter FR-HC2 or the converter unit FR-CC2, assign the instantaneous power failure detection (X11) signal to an input terminal to input the IPF signal from the FR-HC2/FR-CC2 to the terminal for X11 signal.

| Parameters referred to | | | |
|---|---|---|---|
| Pr. 190 to Pr. 196 | (output terminal function selection) | => | page 5-350 |

## 5.11.11 Analog remote output function

An analog value can be output from the analog output terminal.

| Pr. | Name | Initial value | Setting range | Description | |
|---|---|---|---|---|---|
| 655<br>M530 | Analog remote output selection | 0 | 0 | Remote output data is cleared when the power supply is turned OFF | Remote output data is cleared during an inverter reset |
| | | | 1 | Remote output data is retained when the power supply is turned OFF | |
| | | | 10 | Remote output data is cleared when the power supply is turned OFF | Remote output data is retained during an inverter reset |
| | | | 11 | Remote output data is retained when the power supply is turned OFF | |
| 656<br>M531 | Analog remote output 1 | 1000% | 800 to 1200% | Value output from the terminal set as "87" in terminal function selection (Pr. 54, Pr. 158) | Set the analog value for outputting from the analog output terminals FM/CA and AM and option FR-A8AY. |
| 657<br>M532 | Analog remote output 2 | 1000% | 800 to 1200% | Value output from the terminal set as "88" in terminal function selection (Pr. 54, Pr. 158) | |
| 658<br>M533 | Analog remote output 3 | 1000% | 800 to 1200% | Value output from the terminal set as "89" in terminal function selection (Pr. 54, Pr. 158) | |
| 659<br>M534 | Analog remote output 4 | 1000% | 800 to 1200% | Value output from the terminal set as "90" in terminal function selection (Pr. 54, Pr. 158) | |

**Analog remote output (Pr. 656 to Pr. 659)**

- The terminals FM/CA, AM and the analog output terminal of the option FR-A8AY can output the values set in Pr. 656 to Pr. 659 (Analog remote output).
- When Pr. 54 "FM/CA terminal function selection" = "87, 88, 89, or 90" (remote output), the FM type inverter can output a pulse train from the terminal FM.
- For FM output (Pr. 291 "Pulse train I/O selection" = "0 (initial value) or 1"):
  Terminal FM output [pulses/s] = 1440 [Hz] × (analog remote output value – 1000)/100
  Where the output range is 0 to 2400 pulses/s.
- For high-speed pulse output (Pr. 291 "Pulse train I/O selection" = "10, 11, 20, or 21"):
  Terminal FM output [pulses/s] = 50K [Hz] × (analog remote output value – 1000)/100
  Where the output range is 0 to 55K pulses/s.

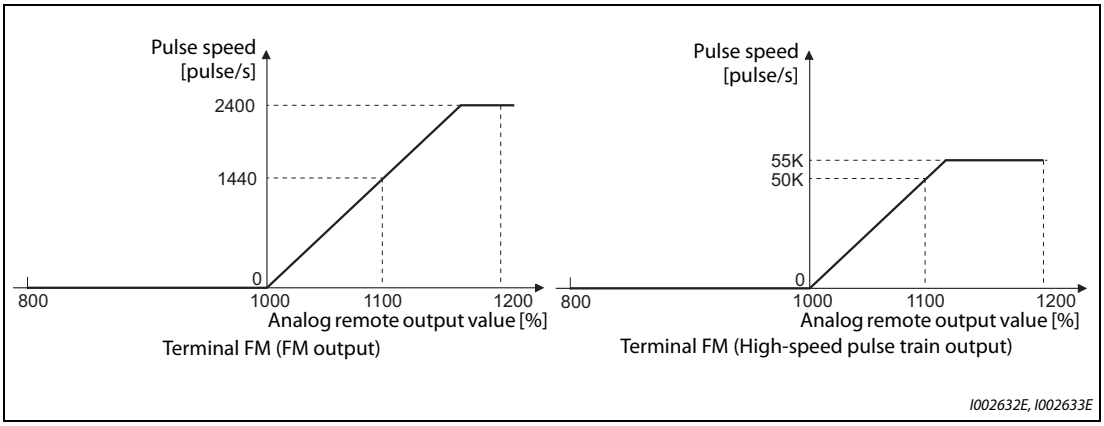


***Fig. 5-172:*** *Terminal FM output*

- When Pr. 54 "FM/CA terminal function selection" = "87, 88, 89, or 90" (remote output), the CA type inverter can output any analog current from the terminal CA.
- Terminal CA output [mA] = 20 [mA] × (analog remote output value – 1000)/100
  Where the output range is 0 to 20 mA.

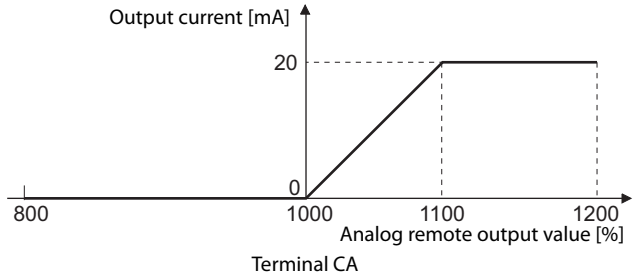


***Fig. 5-173:*** *Terminal CA output*

- When Pr. 158 "AM terminal function selection" = "87, 88, 89, or 90", an analog voltage can be output from the terminal AM.
- Terminal AM output [V] = 10 [V] × (analog remote output value – 1000)/100
  The output range is –10 V to +10 V regardless of the Pr. 290 "Monitor negative output selection" setting.

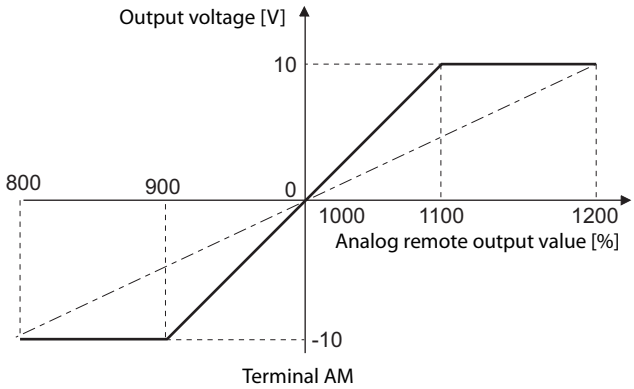


***Fig. 5-174:*** *Terminal AM output*

**Analog remote output data retention (Pr. 655)**

- When the power supply is reset (including a power failure) while Pr. 655 "Analog remote output selection" = "0" (initial value) or 10" and , the remote analog output (Pr. 656 to Pr. 659) returns to its initial value (1000%).
- When Pr. 655 = "1 or 11", the analog remote output data is saved in EEPROM before the power supply is turned OFF. This means that the analog value output after power restoration is the same as before the power supply was turned OFF. However, when Pr. 655 = "1", the data is not saved during an inverter reset (terminal reset, reset request via communication).
- When Pr. 655 = "10 or 11", the analog output before the reset is saved even during an inverter reset.
- When the setting in Pr. 655 is changed, the remote analog output (Pr. 656 to Pr. 659) returns to its initial value (1000%).

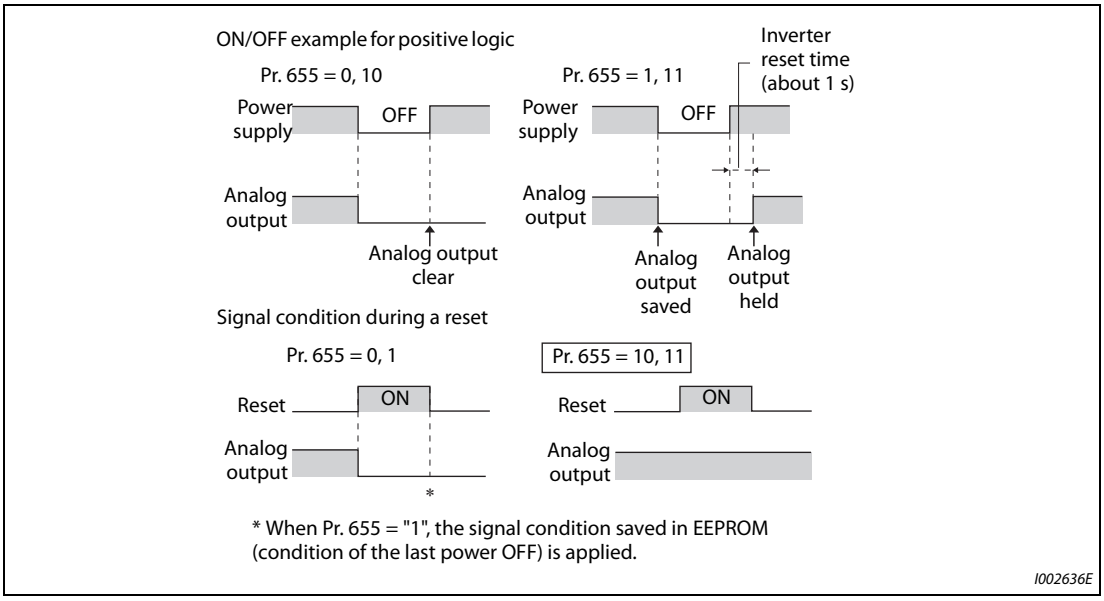


***Fig. 5-175:*** *Analog remote output data retention*

**NOTE**

When Pr. 655 = "1 or 11" (remote analog output data retention at power OFF), take measures such as connecting R1/L11 with P/+, and S1/L21 with N/- so that the control power is retained (while power is supplied to R/L1, S/L2 and T/L3). If the control power is not retained, the analog output after turning ON the power is not guaranteed to work. When connecting the high power factor converter FR-HC2, assign the instantaneous power failure detection (X11) signal to an input terminal to input the IPF signal from the FR-HC2 to the terminal for X11 signal.

| Parameters referred to | | | |
|---|---|---|---|
| Pr. 54 | FM/CA terminal function selection | => | page 5-330 |
| Pr. 158 | AM terminal function selection | => | page 5-330 |
| Pr. 290 | Monitor negative output selection | => | page 5-330 |
| Pr. 291 | Pulse train I/O selection | => | page 5-330 |

## 5.11.12 Fault code output selection

When a fault occurs, the corresponding data can be output as a 4-bit digital signal using via an open collector output terminal.

The fault code can be read using an input module of programmable controller, etc.

| Pr. | Name | Initial value | Setting range | Description |
|---|---|---|---|---|
| 76<br>M510 | Fault code output selection | 0 | 0 | Without fault code output |
| | | | 1 | With fault code output<br>(Refer to the table below.) |
| | | | 2 | Fault code is output only when a fault occurs.<br>(Refer to the table below.) |

- Fault codes can be output to the output terminals by setting Pr. 76 "Fault code output selection" = "1 or 2".
- When the setting is "2", a fault code is only output when a fault occurs. In normal operation the terminal outputs the signal assigned in Pr. 191 to Pr. 194 (output terminal function selection).
- The fault codes that can be output are shown in the table below.
  (0: Output transistor OFF, 1: Output transistor ON)

| Operation panel indication (FR-DU08) | Output terminal operation | | | | Fault code |
|---|---|---|---|---|---|
| | SU | IPF | OL | FU | |
| Normal ① | 0 | 0 | 0 | 0 | 0 |
| E.OC1 | 0 | 0 | 0 | 1 | 1 |
| E.OC2 | 0 | 0 | 1 | 0 | 2 |
| E.OC3 | 0 | 0 | 1 | 1 | 3 |
| E.OV1 to E.OV3 | 0 | 1 | 0 | 0 | 4 |
| E.THM | 0 | 1 | 0 | 1 | 5 |
| E.THT | 0 | 1 | 1 | 0 | 6 |
| E.IPF | 0 | 1 | 1 | 1 | 7 |
| E.UVT | 1 | 0 | 0 | 0 | 8 |
| E.FIN | 1 | 0 | 0 | 1 | 9 |
| E.BE | 1 | 0 | 1 | 0 | A |
| E. GF | 1 | 0 | 1 | 1 | B |
| E.OHT | 1 | 1 | 0 | 0 | C |
| E.OLT | 1 | 1 | 0 | 1 | D |
| E.OPT<br>E.OP1 | 1 | 1 | 1 | 0 | E |
| Other than the above | 1 | 1 | 1 | 1 | F |

***Tab. 5-143:*** *Alarm codes*

① When Pr. 76 = "2", the terminal outputs the signal assigned by Pr. 191 to Pr. 194.

**NOTE**

If an error occurs while Pr. 76 ≠ "0", the output terminals SU, IPF, OL, and FU output the signals in the table above regardless of the settings in Pr. 191 to Pr. 194 (output terminal function selection). Take caution when controlling the inverter with the output signals set by Pr. 191 to Pr. 194.

| Parameters referred to | | | |
|---|---|---|---|
| Pr. 190 to Pr. 196 | (output terminal function selection) | => | page 5-350 |

## 5.11.13 Pulse train output of output power

After power ON or inverter reset, output signal (Y79 signal) is output in pulses every time accumulated output power, which is counted after the Pr. 799 "Pulse increment setting for output power" is set, reaches the specified value (or its integral multiples).

| Pr. | Name | Initial value | Setting range | Description |
|---|---|---|---|---|
| 799<br>M520 | Pulse increment setting for output power | 1 kWh | 0.1 kWh, 1 kWh, 10 kWh, 100 kWh, 1000 kWh | Pulse train output of output power (Y79) is output in pulses at every output power (kWh) that is specified. |

**Pulse increment setting for output power (Y79 signal, Pr. 799)**

- After power ON or inverter reset, output signal (Y79 signal) is output in pulses every time accumulated output power of the inverter exceeds Pr. 799 "Pulse increment setting for output power".
- The inverter continues to count the output power at retry function or when automatic restart after instantaneous power failure function works without power OFF of output power (power failure that is too short to cause an inverter reset), and it does not reset the count.
- If power failure occurs, output power is counted from 0 kWh again.
- Assign pulse output of output power (Y79: setting value 79 (positive logic), 179 (negative logic)) to any of Pr. 190 to Pr. 196 (Output terminal function selection).

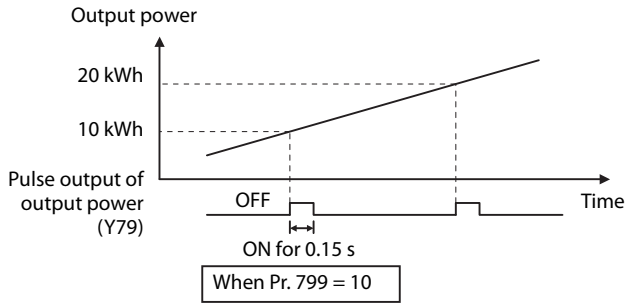


***Fig. 5-176:*** *Pulse train output of output power*

**NOTES**

Because the accumulated data in the inverter is cleared when control power is lost by power failure or at an inverter reset, the value on the monitor cannot be used to charge electricity bill.

Changing the terminal assignment using Pr. 190 to Pr. 196 (output terminal function selection) may affect the other functions. Set parameters after confirming the function of each terminal. (Refer to page 5-350.)

In an application where the pulse outputs are frequently turned ON/OFF, do not assign the signal to the terminal ABC1 or ABC2.
Otherwise, the life of the relay contact decreases.

| Parameters referred to | | | |
|---|---|---|---|
| Pr. 190 to Pr. 196 | (output terminal function selection) | => | page 5-350 |

## 5.11.14 Detection of control circuit temperature

The temperature of the control circuit board can be monitored, and a signal can be output according to the predetermined temperature setting.

| Pr. | Name | Initial value | Setting range | Description |
|---|---|---|---|---|
| 663<br>M060 | Control circuit temperature signal output level | 0 °C | 0 to 100 °C | Set the temperature where the Y207 signal turns ON. |

**Control circuit temperature monitor**

- The operation panel, terminal FM/CA, or terminal AM can be used to monitor the temperature of the control circuit board within the range of 0 to 100 °C.
- When monitoring with the operation panel or terminal AM, the range becomes –20 to 100 °C by setting the display/output with a minus sign in Pr. 290 "Monitor negative output selection".

**Control circuit temperature detection (Pr. 663, Y207 signal)**

- The Y207 signal can be output when the control circuit temperature reaches the Pr. 663 setting or higher.
- For the Y207 signal, set "207 (positive logic) or 307 (negative logic)" in one of Pr. 190 to Pr. 196 (output terminal function selection) to assign the function to the output terminal.

**NOTES**

The Y207 signal is turned OFF when the control circuit temperature becomes 5 °C or more lower than the Pr. 663 setting.

Changing the terminal assignment using Pr. 190 to Pr. 196 (output terminal function selection) may affect the other functions. Set parameters after confirming the function of each terminal.

| Parameters referred to | | | |
|---|---|---|---|
| Pr. 54 | FM/CA terminal function selection | => | page 5-330 |
| Pr. 158 | AM terminal function selection | => | page 5-330 |
| Pr. 190 to Pr. 196 | (output terminal function selection) | => | page 5-350 |
| Pr. 290 | Monitor negative output selection | => | page 5-330 |

# 5.12 (T) Multi-Function Input Terminal Parameters

| Purpose | Parameter to set | | | Refer to page |
|---|---|---|---|---|
| To inverse the rotation direction with the voltage/current analog input selection (terminals 1, 2, and 4) | Analog input selection | P.T000, P.T001 | Pr. 73, Pr. 267 | 5-376 |
| To assign functions to analog input terminals | Terminal 1 and terminal 4 function assignment | P.T010, P.T040 | Pr. 858, Pr. 868 | 5-381 |
| To adjust the main speed by the analog auxiliary input | Analog auxiliary input and compensation (addition compensation and override functions) | P.T021, P.T031, P.T050, P.T051 | Pr. 73, Pr. 242, Pr. 243, Pr. 252, Pr. 253 | 5-382 |
| To eliminate noise on analog inputs | Analog input filter | P.T002 to P.T007 | Pr. 74, Pr. 822, Pr. 826, Pr. 832, Pr. 836, Pr. 849 | 5-386 |
| To adjust analog input frequency/ voltage (current) (calibration) | Frequency setting voltage (current) bias and gain | P.T100 to P.T103, P.T200 to P.T203, P.T400 to P.T403, P.M043 | Pr. 125, Pr. 126, Pr. 241, C2 to C7 (Pr. 902 to Pr. 905), C12 to C15 (Pr. 917 to Pr. 918) | 5-388 |
| To adjust analog input torque/ voltage (current) (calibration) | Torque setting voltage (current) bias and gain | P.T110 to P.T113, P.T410 to P.T413, P.M043 | Pr. 241, C16 to C19 (Pr. 919 to Pr. 920), C38 to C41 (Pr. 932 to Pr. 933) | 5-396 |
| To continue operating at analog current input loss | 4-mA input check | P.T052 to P.T054 | Pr. 573, Pr. 777, Pr. 778 | 5-386 |
| To assign functions to input terminals | Input terminal function selection | P.T700 to P.T711, P.T740 | Pr. 178 to Pr. 189, Pr. 699 | 5-409 |
| To set MRS signal (Output stop) to the NC contact specification | MRS input selection | P.T720 | Pr. 17 | 5-413 |
| To changethe input specification (NO/NC contact) to enable inverter operation when FR-HC2, FR-CV,or FR-CC2 is connected. | X10 input selection | P.T721 | Pr. 599 | 5-656 |
| To enable the second (third) function only during the constant speed | RT signal application period selection | P.T730 | Pr. 155 | 5-415 |
| To assign start and forward/reverse commands to different signals | Start signal (STF/STR) operation selection | P.G106 | Pr. 250 | 5-417 |

## 5.12.1 Analog input selection

The functions to switch the analog input terminal specifications, override function, forward/reverse rotation by the input signal polarity are selectable.

| Pr. | Name | Initial value | Setting range | | Description |
|---|---|---|---|---|---|
| 73 T000 | Analog input selection | 1 | 0 to 5, 10 to 15 | Switch 1 - OFF (initial status) | The terminal 2 input specification (0 to 5 V, 0 to 10 V, 0 to 20 mA) and terminal 1 input specification (0 to ±5 V, 0 to ±10 V) are selectable. Also the override and reversible operation settings are selectable. |
| | | | 6, 7, 16, 17 | Switch 1 - ON | |
| 267 T001 | Terminal 4 input selection | 0 | 0 | Switch 2 - ON (initial status) | Terminal 4 input, 4 to 20 mA |
| | | | 1 | Switch 2 - OFF | Terminal 4 input, 0 to 5 V |
| | | | 2 | | Terminal 4 input, 0 to 10 V |

**Analog input specification selection**

- Concerning the terminals 2 and 4 used for analog input, the voltage input (0 to 5 V, 0 to 10 V) and current input (0 to 20 mA) are selectable. To change the input specification, change the parameters (Pr. 73, Pr. 267) and voltage/current input switch settings (switches 1, 2).

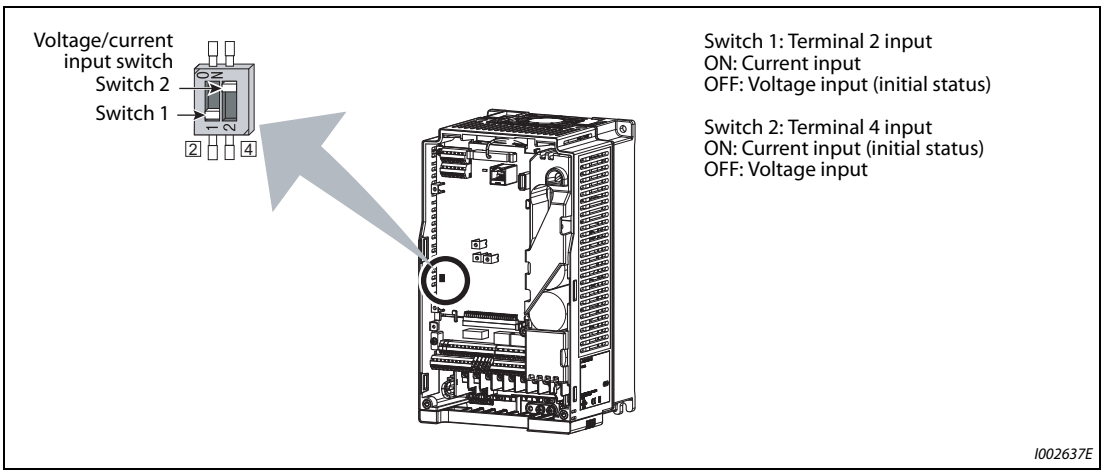


***Fig. 5-177:*** *Voltage/current input switches*

- The terminal 2/4 rating specifications change depending on the voltage/current input switch settings.
  Voltage input: input resistance 10 kΩ ± 1 kΩ, permissible maximum voltage 20 V DC
  Current input: input resistance 245 Ω ± 5 Ω, permissible maximum current 30 mA
- Correctly set Pr. 73, Pr. 267 and voltage/current input switch settings so that the analog signal appropriate for the settings is input. The incorrect settings shown in the table below cause a failure. Other incorrect settings result in an incorrect operation.

| Setting causing a failure | | Operation |
|---|---|---|
| Switch setting | Terminal input | |
| ON (current input) | Voltage input | Causes an analog signal output circuit failure in an external device (due to increased loads on the signal output circuit of the external device). |
| OFF (Voltage input) | Current input | Causes an input circuit failure in the inverter (due to an increased output power in the analog signal output circuit of an external device). |

***Tab. 5-144:*** *Switch settings causing a failure*

**NOTE** Check the voltage/current input switch number indication before setting, because it is different from the FR-A700 series switch number indication.

- Set the Pr. 73 and voltage/current input switch settings according to the table below. ( indicates the main speed setting.)

| Pr. 73 setting | Terminal 2 input | Switch 1 | Terminal 1 input | Compensation input terminal compensation method | Polarity reversible |
|---|---|---|---|---|---|
| 0 | 0 to 10 V | OFF | 0 to ±10 V | Terminal 1 Addition compensation | Not applied (state in which a negative polarity frequency command signal is not accepted) |
| 1 (initial value) | 0 to 5 V | OFF | 0 to ±10 V | | |
| 2 | 0 to 10 V | OFF | 0 to ±5 V | | |
| 3 | 0 to 5 V | OFF | 0 to ±5 V | | |
| 4 | 0 to 10 V | OFF | 0 to ±10 V | Terminal 2 Override | |
| 5 | 0 to 5 V | OFF | 0 to ±5 V | | |
| 6 | 0 to 20 mA | ON | 0 to ±10 V | Terminal 1 Addition compensation | |
| 7 | 0 to 20 mA | ON | 0 to ±5 V | | |
| 10 | 0 to 10 V | OFF | 0 to ±10 V | | Applied |
| 11 | 0 to 5 V | OFF | 0 to ±10 V | | |
| 12 | 0 to 10 V | OFF | 0 to ±5 V | | |
| 13 | 0 to 5 V | OFF | 0 to ±5 V | | |
| 14 | 0 to 10 V | OFF | 0 to ±10 V | Terminal 2 Override | |
| 15 | 0 to 5 V | OFF | 0 to ±5 V | | |
| 16 | 0 to 20 mA | ON | 0 to ±10 V | Terminal 1 Addition compensation | |
| 17 | 0 to 20 mA | ON | 0 to ±5 V | | |

***Tab. 5-145:*** *Setting of parameter 73*

- Turning the Terminal 4 input selection (AU) signal ON sets terminal 4 to the main speed. With this setting, the main speed setting terminal is invalidated.
- Set the Pr. 267 and voltage/current input switch setting according to the table below.

| Pr. 267 setting | Terminal 4 input | Switch 2 |
|---|---|---|
| 0 (initial value) | 4 to 20 mA | ON |
| 1 | 0 to 5 V | OFF |
| 2 | 0 to 10 V | OFF |

***Tab. 5-146:*** *Setting of parameter 267*

**NOTES**

To enable the terminal 4, turn the AU signal ON.

Set the parameters and the switch settings so that they agree. Incorrect setting may cause a fault, failure or malfunction.

Terminal 1 (frequency setting auxiliary input) is added to the terminal 2 or 4 main speed setting signal.

When the override setting is selected, terminal 1 or 4 is set to the main speed setting, and terminal 2 is set to the override signal (0 to 5 V or 0 to 10 V, and 50% to 150%). (If the main speed of terminal 1 or 4 is not input, the compensation by terminal 2 is disabled.)

Use Pr. 125 (Pr. 126) (frequency setting gain) to change the maximum output frequency at the input of the maximum output frequency command voltage (current). At this time, the command voltage (current) need not be input.
The acceleration/deceleration time inclines up/down to the acceleration/deceleration reference frequency, so it is not affected by change of Pr. 73.

When Pr. 858 "Terminal 4 function assignment" and Pr. 868 "Terminal 1 function assignment" = "4", the terminal 1 and terminal 4 values are set to the stall prevention operation level.

After the voltage/current input signal is switched with Pr. 73, Pr. 267, and voltage/current input switches, be sure to let calibration performed.

When Pr. 561 "PTC thermistor protection level" ≠ "9999", terminal 2 does not function as an analog frequency command.

**To run with an analog input voltage**

- Concerning the frequency setting signal, input 0 to 5 V DC (or 0 to 10 V DC) to terminals 2 and 5. The 5 V (10 V) input is the maximum output frequency.
- The power supply 5 V (10 V) can be input by either using the internal power supply or preparing an external power supply. The internal power source is 5 V DC output between terminals 10 and 5, and 10 V DC output between terminals 10E and 5.

| Terminal | Inverter internal power source voltage | Frequency setting resolution | Pr. 73 (terminal 2 input voltage) |
|---|---|---|---|
| 10 | 5 V DC | 0.030 Hz/60 Hz | 0 to 5 V DC input |
| 10E | 10 V DC | 0.015 Hz/60 Hz | 0 to 10 V DC input |

***Tab. 5-147:*** *Built-in power supply voltage*

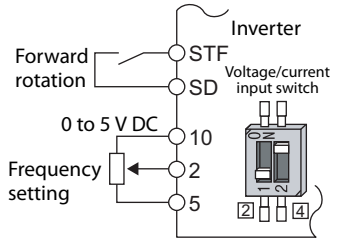


***Fig. 5-178:***
*Frequency setting by voltage 0 to 5V DC*

I002638E

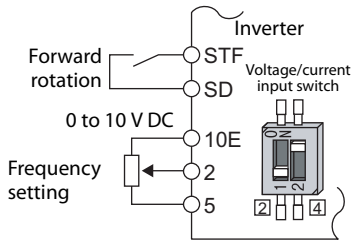


***Fig. 5-179:***
*Frequency setting by voltage 0 to 10 V DC*

I002639E

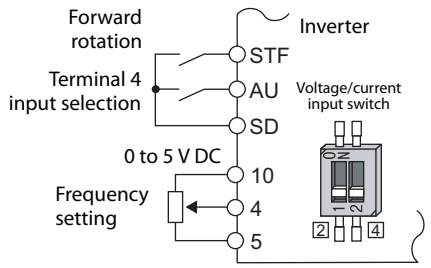


***Fig. 5-180:***
*Frequency setting by voltage 0 to 5V DC*

I002640E

- To supply the 10 V DC input to terminal 2, set "0, 2, 4, 10, 12, or 14" in Pr. 73. (The initial value is 0 to 5 V.)
- Setting "1 (0 to 5 V DC)" or "2 (0 to 10 V DC)" in Pr. 267 and turning the voltage/current input switches OFF sets the terminal 4 to the voltage input specification. Turning ON the AU signal activates terminal 4 input.

**NOTE** The wiring length of the terminal 10, 2, 5 should be 30 m at maximum.

**Running with analog input current**

- For constant pressure or temperature control with fans, pumps, or other devices, automatic operation is available by setting the regulator output signal 4 to 20 mADC to between terminals 4 and 5.
- To use the terminal 4, the AU signal needs to be turned ON.

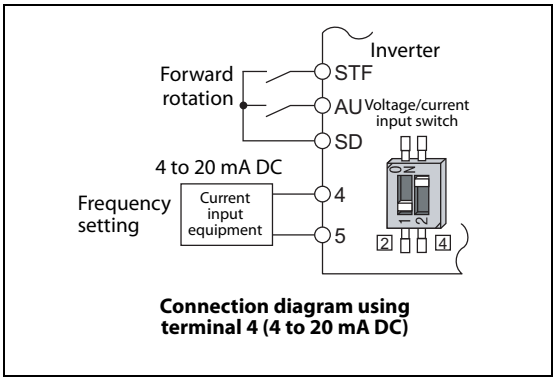


***Fig. 5-181:***
*Frequency setting by current 4 to 20 mA DC*

I002641E

- Setting "6, 7, 16, or 17" in Pr. 73 and turning the voltage/current input switches ON sets terminal 2 to the current input specification. Concerning the settings, the AU signal does not need to be turned ON.

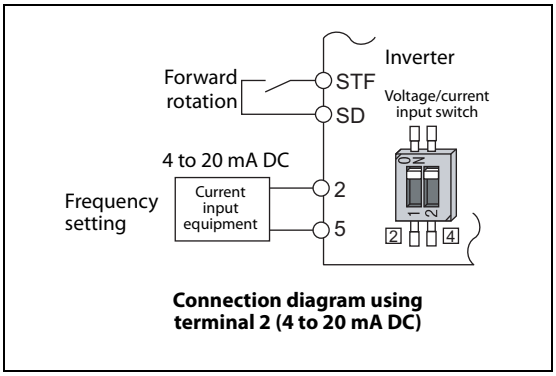


***Fig. 5-182:***
*Frequency setting by current 4 to 20 mA DC*

I002642E

**To perform forward/reverse rotation with the analog input (polarity reversible operation)**

- Setting Pr. 73 to a value of "10 to 17" enables the polarity reversible operation.
- Setting ±input (0 to ±5 V or 0 to ±10 V) to the terminal 1 allows the operation of forward/reverse rotation by the polarity.

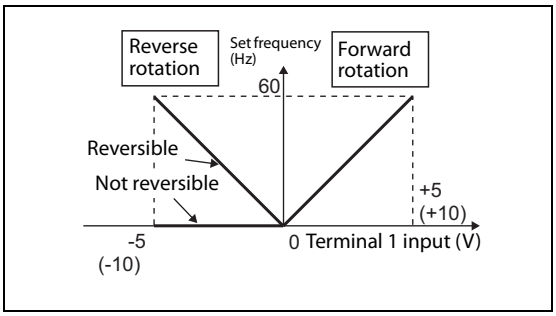


***Fig. 5-183:***
*Compensation input characteristics when STF is ON*

I002643E

| Parameters referred to | | | |
|---|---|---|---|
| Pr. 22 | Stall prevention operation level | => | page 5-83 |
| Pr. 125 | Terminal 2 frequency setting gain frequency | => | page 5-388 |
| Pr. 126 | Terminal 4 frequency setting gain frequency | => | page 5-388 |
| Pr. 252, Pr. 253 | Override bias/gain | => | page 5-382 |
| Pr. 561 | PTC thermistor protection level | => | page 5-284 |
| Pr. 858 | Terminal 4 function assignment | => | page 5-381 |
| Pr. 868 | Terminal 1 function assignment | => | page 5-381 |

## 5.12.2 Analog input terminal (terminal 1, 4) function assignment

The analog input terminal 1 and terminal 4 functions are set and changeable with parameters.

| Pr. | Name | Initial value | Setting range | Description |
|---|---|---|---|---|
| 868<br>T010 | Terminal 1 function assignment | 0 | 0 to 6, 9999 | Select the terminal 1 function.<br>(Refer to the table below.) |
| 858<br>T040 | Terminal 4 function assignment | 0 | 0, 1, 4, 9999 | Select the terminal 4 function.<br>(Refer to the table below.) |

- Concerning terminal 1 and terminal 4 used for analog input, the frequency (speed) command, magnetic flux command, torque command, and other similar commands are usable. The functions available are different depending on control mode as shown in the table below. (For control mode, see page 5-55.)
- Terminal 1 functions under different control modes

| Pr. 868 setting | V/F control<br>Advanced magnetic flux vector control | Real sensorless vector control, vector control, PM sensorless vector control | | |
|---|---|---|---|---|
| | | Speed control | Torque control | Position control |
| 0<br>(initial value) | Frequency setting auxiliary | Speed setting auxiliary | Speed limit assistance | — |
| 1 | — | Magnetic flux command ① | Magnetic flux command ① | Magnetic flux command ① |
| 2 | — | Regenerative torque limit<br>(Pr. 810=1) | — | Regenerative torque limit<br>(Pr. 810 = 1) |
| 3 | — | — | Torque command<br>(Pr. 804 = 0) | — |
| 4 | Stall prevention operation level input | Torque limit<br>(Pr. 810 = 1) | Torque command<br>(Pr. 804 = 0) | Torque limit<br>(Pr. 810 = 1) |
| 5 | — | — | Forward/reverse rotation speed limit<br>(Pr. 807 = 2) | — |
| 6 | — | Torque bias input<br>(Pr. 840 =1, 2, 3) ① | — | — |
| 9999 | — | — | — | — |

***Tab. 5-148:*** *Function of terminal 1 according to the control mode*

● Terminal 4 functions by control

| Pr. 858 setting | V/F control<br>Advanced magnetic flux vector control | Real sensorless vector control, vector control, PM sensorless vector control | | |
|---|---|---|---|---|
| | | Speed control | Torque control | Position control |
| 0 (initial value) | Frequency command (AU signal-ON) | Speed command (AU signal-ON) | Speed limit (AU signal-ON) | — |
| 1 | — | Magnetic flux command ① ② | Magnetic flux command ① ② | Magnetic flux command ① ② |
| 4 | Stall prevention operation level input | Torque limit (Pr. 810 = 1) ③ | — | Torque limit (Pr. 810 = 1) ③ |
| 9999 | — | — | — | — |

—: No function

***Tab. 5-149:*** *Function of terminal 4 according to the control mode*

① This function is valid under vector control.
② Invalid when Pr. 868 = "1"
③ Invalid when Pr. 868 = "4"

**NOTE**

When Pr. 868 = "1" (magnetic flux command) or "4" (stall prevention/torque limit), the terminal 4 function is enabled whether the AU terminal is turned ON/OFF.

| Parameters referred to | | | |
|---|---|---|---|
| | Advanced magnetic flux vector control | => | page 5-66 |
| | Real sensorless vector control | => | page 5-55 |
| Pr. 804 | Torque command source selection | => | page 5-129 |
| Pr. 807 | Speed limit selection | => | page 5-133 |
| Pr. 810 | Torque limit input method selection | => | page 5-83 |
| Pr. 840 | Torque bias selection | => | page 5-110 |

## 5.12.3 Analog input compensation

Addition compensation or fixed ratio analog compensation (override) with terminal 2 set to auxiliary input is applicable to the multi-speed operation or terminal 2/terminal 4 speed setting signal (main speed).

| Pr. | Name | Initial value | Setting range | Description |
|---|---|---|---|---|
| 73<br>T000 | Analog input selection | 1 | 0 to 3, 6, 7, 10 to 13, 16, 17 | Addition compensation |
| | | | 4, 5, 14, 15 | Override compensation |
| 242<br>T021 | Terminal 1 added compensation amount (terminal 2) | 100% | 0 to 100% | Set the percentage of addition compensation when terminal 2 is set to the main speed. |
| 243<br>T041 | Terminal 1 added compensation amount (terminal 4) | 75% | 0 to 100% | Set the percentage of addition compensation when terminal 4 is set to the main speed. |
| 252<br>T050 | Override bias | 50% | 0 to 200% | Set the percentage of override function bias side compensation. |
| 253<br>T051 | Override gain | 150% | 0 to 200% | Set the percentage of override function gain side compensation. |

**Addition compensation (Pr. 242, Pr. 243)**

- A compensation signal is addable to the main speed setting for such as synchronous or continuous speed control operation.
- Setting a value of "0 to 3, 6, 7, 10 to 13, 16, and 17" to Pr. 73 adds the voltage between terminals 1 and 5 to the voltage signal of the terminals 2 and 5.
- When Pr. 73= "0 to 3, 6, or 7", and if the result of addition is negative, it is regarded as 0 and the operation is stopped. When Pr. 73 = "10 to 13, 16, or 17", the operation is reversed (polarity reversible operation) with STF signal ON.
- The terminal 1 compensation input is addable to the multi-speed setting or terminal 4 (initial value: 4 to 20 mA).
- The degree of addition compensation to terminal 2 is adjustable with Pr. 242.
  The degree of addition compensation to terminal 4 is adjustable with Pr. 243.
- Analog command value with use of terminal 2
  = terminal 2 input + terminal 1 input × (Pr. 242/100 [%])

  Analog command value with use of terminal 4
  = terminal 4 input + terminal 1 input × (Pr. 243/100 [%])

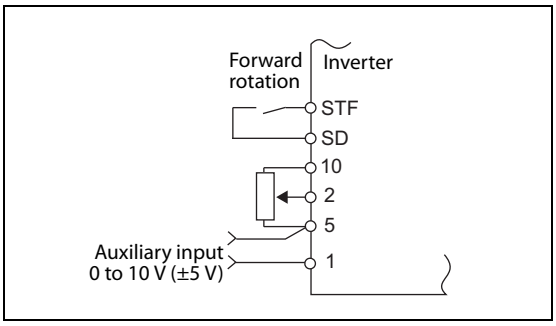


***Fig. 5-184:***
*Example of addition compensation connection*

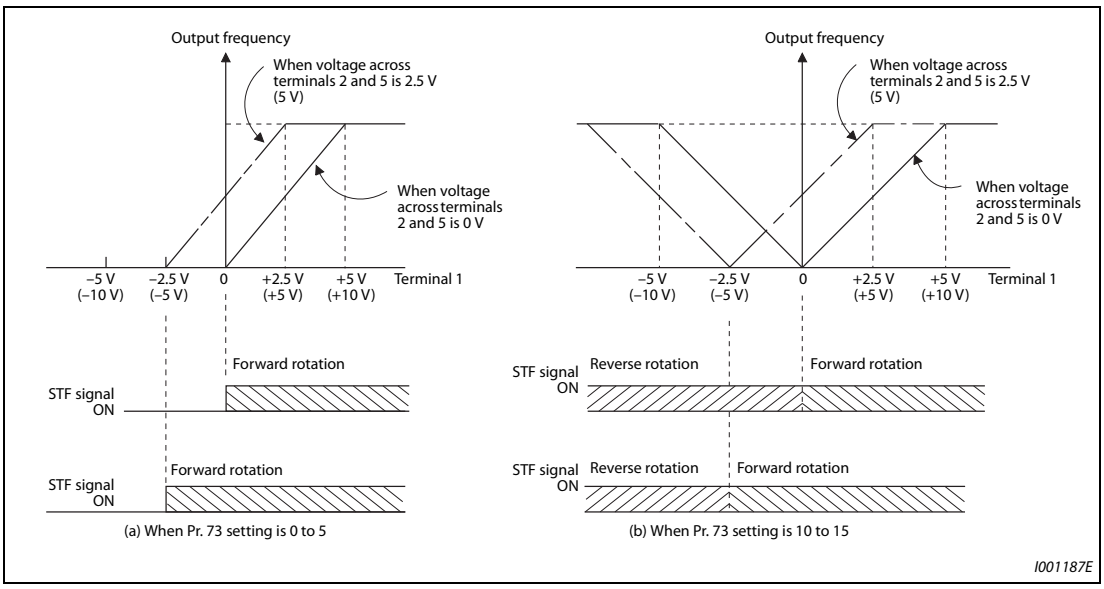


***Fig. 5-185:*** *Auxiliary input characteristics*

**NOTE**

After changing the Pr. 73 setting, check the voltage/current input switch setting. Incorrect setting may cause a fault, failure or malfunction. (For the settings, refer to page 5-376.)

**Override function (Pr. 252, Pr. 253)**

- Use the override function to make the main speed changed at a specified rate.

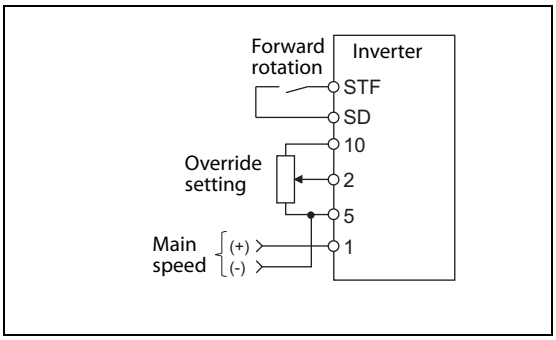


***Fig. 5-186:***
*Connection example for the override function*

- Set Pr. 73 = "4, 5, 14, or 15" to select the override function.
- When the override function is selected, terminal 1 or 4 is used for the main speed setting, and terminal 2 is used for the override signal. (if the main speed is not input to the terminal 1 or 4, the compensation by terminal 2 is disabled.)
- Specify the scope of override by using Pr. 252 and Pr. 253.
- How to calculate the set frequency for override:
  - Set frequency (Hz) = Main speed setting frequency [Hz] × (Compensation [%]/100 [%])
  - Main speed setting frequency (Hz): Terminals 1 or 4 input, multi-speed setting
  - Compensation (%): Terminal 2 input

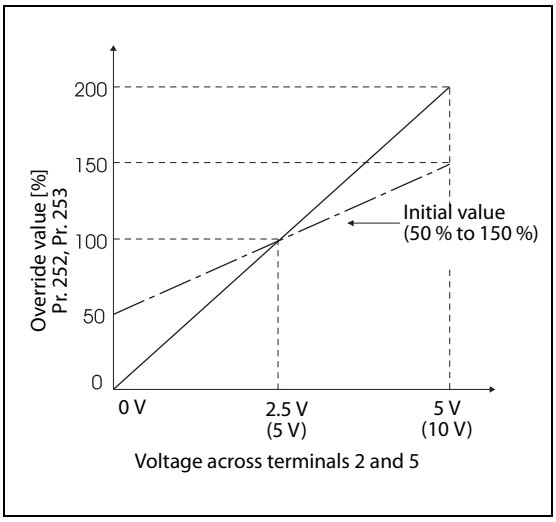


***Fig. 5-187:***
*Override*

**Example** ▽

When Pr. 73 = "5"
By the terminal 1 (main speed) and terminal 2 (auxiliary) input, the setting frequency is set as shown in the figure below.

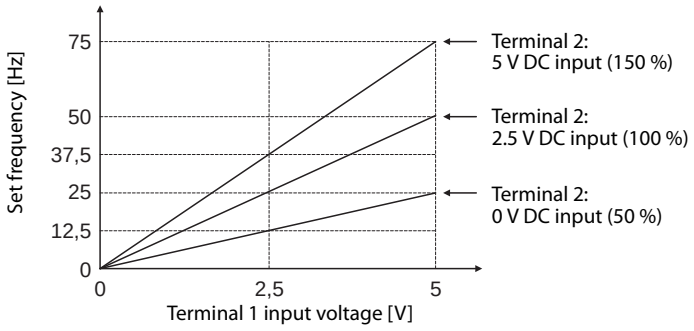


△

**NOTES**

To use terminal 4, the AU signal needs to be turned ON.

To make compensation input for the multi-speed operation or remote setting, set Pr. 28 "Multi-speed input compensation selection" = "1" (with compensation) (initial value "0").

After changing the Pr. 73 setting, check the voltage/current input switch setting. Incorrect setting may cause a fault, failure or malfunction. (For the settings, refer to page 5-376.)

| Parameters referred to | | | |
|---|---|---|---|
| Pr. 28 | Multi-speed input compensation selection | => | page 5-182 |
| Pr. 73 | Analog input selection | => | page 5-376 |

## 5.12.4 Analog input responsiveness and noise elimination

The frequency command/torque command responsiveness and stability are adjustable by using the analog input (terminals 1, 2, and 4) signal.

| Pr. | Name | Initial value | Setting range | Description |
|---|---|---|---|---|
| 74<br>T002 | Input filter time constant | 1 | 0 to 8 | The primary delay filter time constant to the analog input is selectable. The higher the value, the lower the responsiveness. |
| 822<br>T003 | Speed setting filter 1 | 9999 | 0 to 5 s | Set the primary delay filter time constant to the external speed command (analog input command). |
| | | | 9999 | Use the Pr. 74 setting. |
| 826<br>T004 | Torque setting filter 1 | 9999 | 0 to 5 s | Set the primary delay filter time constant to the external torque command (analog input command). |
| | | | 9999 | Use the Pr. 74 setting. |
| 832<br>T005 | Speed setting filter 2 | 9999 | 0 to 5 s, 9999 | Second function of Pr. 822 (enabled when the RT signal is ON) |
| 836<br>T006 | Torque setting filter 2 | 9999 | 0 to 5 s, 9999 | Second function of Pr. 826 (enabled when the RT signal is ON) |
| 849<br>T007 | Analog input offset adjustment | 100% | 0 to 200% | Make the analog speed input (terminal 2) have an offset. This prevents the motor from rotating by noise to the analog input or another cause on the speed 0 command. |

**Block diagram**

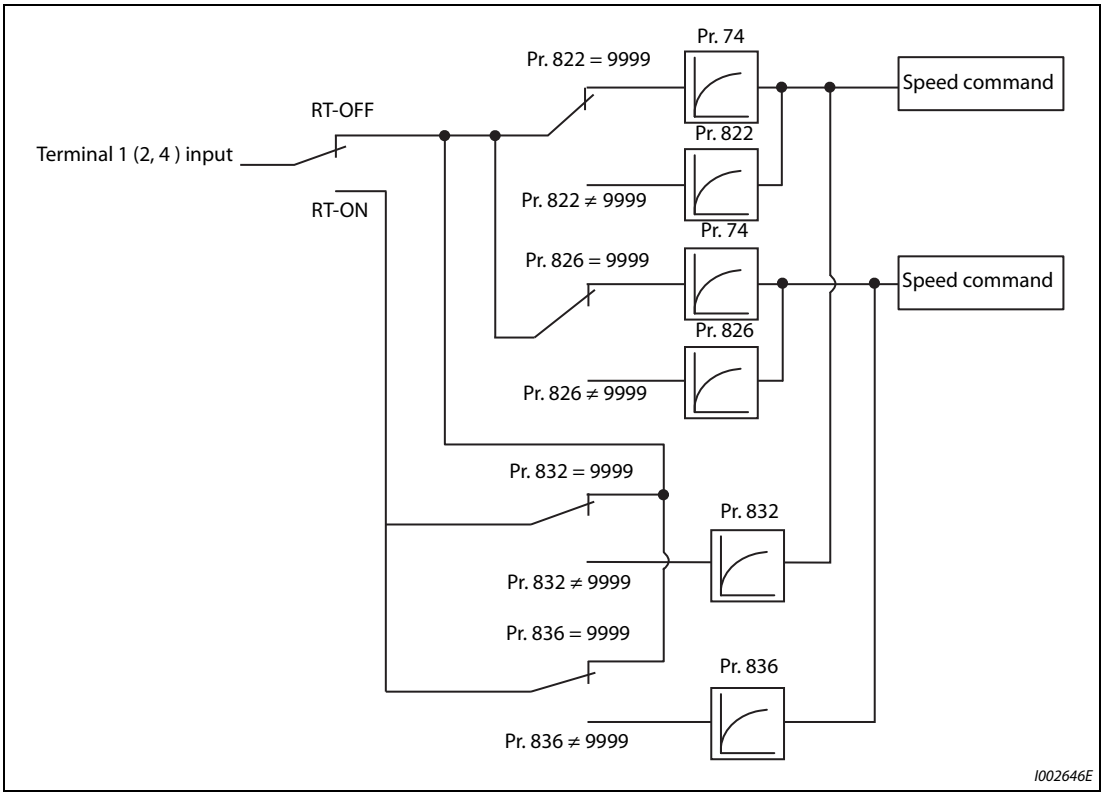


***Fig. 5-188:*** *Terminal 1 (2, 4) input block diagram*

**Analog input time constant (Pr. 74)**

- It is effective to eliminate noise on the frequency setting circuit.
- Increase the filter time constant if steady operation cannot be performed due to noise, etc. A larger setting results in slower response. (The time constant can be between 0 and 8, which are about 5 ms to 1 s.)

**Analog speed command input time constant (Pr. 822, Pr. 832)**

- Set the primary delay filter time constant to the external speed command (analog input command) by using Pr. 822 "Speed setting filter 1".
- To change the time constant, for example, in a case where only one inverter is used to switch between more than one motor, use Pr. 832 "Speed setting filter 2".
- Pr. 832 "Speed setting filter 2" is enabled when the RT signal is ON.

**Analog torque command input time constant (Pr. 826, Pr. 836)**

- Set the primary delay filter time constant to the external torque command (analog input command) by using Pr. 826 "Torque setting filter 1".
- To change the time constant, for example, in a case where only one inverter is used to switch between two motors, use Pr. 836 "Torque setting filter 2".
- Pr. 836 "Torque setting filter 2" is enabled when the RT signal is ON.

**Analog speed command input offset adjustment (Pr. 849)**

- This is used to set a range in which the motor is stopped for prevention of incorrect motor operation in a very low speed rotation by the analog input speed command.
- Regarding the Pr. 849 "Analog input offset adjustment" value 100% is 0, the offset voltage is set as described below:

  100% < Pr. 849 Positive side
  100% > Pr. 849 Negative side

  The detailed calculation of the offset voltage is as described below:

  Offset voltage [V] = Voltage at the time of 100% (5 V or 10 V ①) × (Pr. 849 – 100)/100

  ①It depends on the Pr. 73 setting.

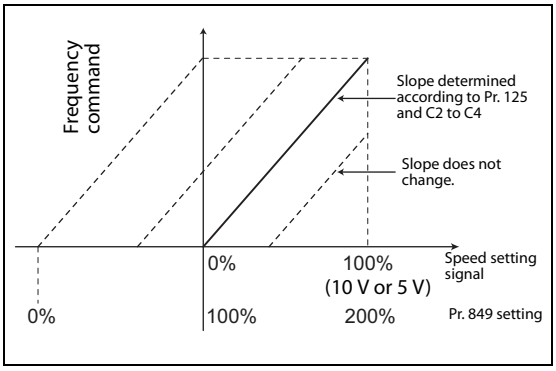


***Fig. 5-189:***
*Offset setting*

**NOTE** Under PID control, the analog input filter is invalid (no filter).

| Parameters referred to | | | |
|---|---|---|---|
| Pr. 73 | Analog input selection | => | page 5-376 |
| Pr. 125, C2 to C4 | (bias and gain of the terminal 2 frequency setting) | => | page 5-388 |

## 5.12.5 Frequency setting voltage (current) bias and gain

The degree (incline) of the output frequency to the frequency setting signal (0 to 5 V DC, 0 to 10 V or 4 to 20 mA) is selectable to a desired amount.

Use Pr. 73 "Analog input selection", Pr. 267 "Terminal 4 input selection", or the voltage/current input switch to switch among input 0 to 5 V DC, 0 to 10 V, and 4 to 20 mA. (Refer to page 5-376)

| Pr. | Name | Initial value | | Setting range | Description | |
|---|---|---|---|---|---|---|
| | | FM | CA | | | |
| C2 (902) ① T200 | Terminal 2 frequency setting bias frequency | 0 Hz | | 0 to 590 Hz | Set the terminal 2 input bias side frequency. | |
| C3 (902) ① T201 | Terminal 2 frequency setting bias | 0% | | 0 to 300% | Set the converted % on the bias side voltage (current) of the terminal 2 input. | |
| 125 (903) ① T202 T022 | Terminal 2 frequency setting gain frequency | 60 Hz | 50 Hz | 0 to 590 Hz | Set the terminal 2 input gain (maximum) frequency. | |
| C4 (903) ① T203 | Terminal 2 frequency setting gain | 100% | | 0 to 300% | Set the converted % on the gain side voltage (current) of the terminal 2 input. | |
| C5 (904) ① T400 | Terminal 4 frequency setting bias frequency | 0 Hz | | 0 to 590 Hz | Set the terminal 4 input bias side frequency. | |
| C6 (904) ① T401 | Terminal 4 frequency setting bias | 20% | | 0 to 300% | Set the converted % on the bias side current (voltage) of terminal 4 input. | |
| 126 (905) ① T402 T042 | Terminal 4 frequency setting gain frequency | 60 Hz | 50 Hz | 0 to 590 Hz | Set the terminal 4 input gain (maximum) frequency. | |
| C7 (905) ① T403 | Terminal 4 frequency setting gain | 100% | | 0 to 300% | Set the converted % on gain side current (voltage) of terminal 4 input. | |
| C12 (917) ① T100 | Terminal 1 bias frequency (speed) | 0 Hz | | 0 to 590 Hz | Set the terminal 1 input bias side frequency (speed). (speed limit) | |
| C13 (917) ① T101 | Terminal 1 bias (speed) | 0% | | 0 to 300% | Set the converted % on bias side voltage of terminal 1 input. (speed limit) | |
| C14 (918) ① T102 | Terminal 1 gain frequency (speed) | 60 Hz | 50 Hz | 0 to 590 Hz | Set the terminal 1 input gain (maximum) frequency (speed). (speed limit) | |
| C15 (918) ① T103 | Terminal 1 gain (speed) | 100% | | 0 to 300% | Set the converted % on the gain side voltage of terminal 1 input. (speed limit) | |
| 241 M043 | Analog input display unit switchover | 0 | | 0 | % display | Select the unit for analog input display |
| | | | | 1 | V/mA display | |

① The parameter number in parentheses is the one for use with the parameter unit (FR-PU07).

### Relationship between the analog input terminal function and the calibration parameter

● Calibration parameter according to the terminal 1 function

| Pr. 868 Setting | Terminal function | Calibration parameter | |
|---|---|---|---|
| | | Bias setting | Gain setting |
| 0 (initial value) | Frequency (speed) setting auxiliary | C2 (Pr. 902) "Terminal 2 frequency setting bias frequency"<br>C3 (Pr. 902) "Terminal 2 frequency setting bias"<br>C5 (Pr. 904) "Terminal 4 frequency setting bias frequency"<br>C6 (Pr. 904) "Terminal 4 frequency setting bias" | Pr. 125 "Terminal 2 frequency setting gain frequency"<br>C4 (Pr. 903) "Terminal 2 frequency setting gain"<br>Pr. 126 "Terminal 4 frequency setting gain frequency"<br>C7 (Pr. 905) "Terminal 4 frequency setting gain" |
| 1 | Magnetic flux command | C16 (Pr. 919) "Terminal 1 bias command (torque/magnetic flux)"<br>C17 (Pr. 919) "Terminal 1 bias (torque/magnetic flux)" | C18 (Pr. 920) "Terminal 1 gain command (torque/magnetic flux)"<br>C19 (Pr. 920) "Terminal 1 gain (torque/magnetic flux)" |
| 2 | Regenerative driving torque limit | C16 (Pr. 919) "Terminal 1 bias command (torque/magnetic flux)"<br>C17 (Pr. 919) "Terminal 1 bias (torque/magnetic flux)" | C18 (Pr. 920) "Terminal 1 gain command (torque/magnetic flux)"<br>C19 (Pr. 920) "Terminal 1 gain (torque/magnetic flux)" |
| 3 | Torque command | | |
| 4 | Stall prevention operation level ① /torque limit/torque command | | |
| 5 | Forward/reverse rotation speed limit | C12 (Pr. 917)" Terminal 1 bias frequency (speed)"<br>C13 (Pr. 917) "Terminal 1 bias (speed)" | C14 (Pr. 918)" Terminal 1 gain frequency (speed)"<br>C15 (Pr. 918) "Terminal 1 gain (speed)" |
| 6 | Torque bias input | C16 (Pr. 919) "Terminal 1 bias command (torque/magnetic flux)"<br>C17 (Pr. 919) "Terminal 1 bias (torque/magnetic flux)" | C18 (Pr. 920)" Terminal 1 gain command (torque/magnetic flux)"<br>C19 (Pr. 920) "Terminal 1 gain (torque/magnetic flux)" |
| 9999 | No function | — | — |

***Tab. 5-150:*** *Terminal 1 functional calibration parameter*

● Calibration parameter according to the terminal 4 function

| Pr. 858 setting | Terminal function | Calibration parameter | |
|---|---|---|---|
| | | Bias setting | Gain setting |
| 0 (initial value) | Frequency command | C5 (Pr. 904) "Terminal 4 frequency setting bias frequency"<br>C6 (Pr. 904) "Terminal 4 frequency setting bias" | Pr. 126 "Terminal 4 frequency setting gain frequency"<br>C7 (Pr. 905)" Terminal 4 frequency setting gain" |
| 1 | Magnetic flux command | C38 (Pr. 932) "Terminal 4 bias command (torque/magnetic flux)"<br>C39 (Pr. 932) "Terminal 4 bias (torque/ magnetic flux)" | C40 (Pr. 933) "Terminal 4 gain command (torque/magnetic flux)"<br>C41 (Pr. 933)" Terminal 4 gain (torque/ magnetic flux)" |
| 4 | Stall prevention operation level ① /torque limit | C38 (Pr. 932) "Terminal 4 bias command (torque/magnetic flux)"<br>C39 (Pr. 932) "Terminal 4 bias (torque/ magnetic flux)" | C40 (Pr. 933) "Terminal 4 gain command (torque/magnetic flux)"<br>C41 (Pr. 933) "Terminal 4 gain (torque/ magnetic flux)" |
| 9999 | No function | — | — |

***Tab. 5-151:*** *Terminal 4 functional calibration parameter*

① Perform stall prevention operation level bias/gain adjustment by using the Pr. 148 "Stall prevention level at 0 V input" and Pr. 149 "Stall prevention level at 10 V input".

**To change the frequency for the maximum analog input (Pr. 125, Pr. 126)**

● To change only the frequency setting (gain) for the maximum analog input voltage (current), set Pr. 125 (Pr. 126). (C2 (Pr. 902) to C7 (Pr. 905) settings do not need to be changed.)

**Analog input bias/gain calibration (C2 (Pr. 902) to C7 (Pr. 905), C12 (Pr. 917) to C15 (Pr. 918))**

- The "bias" and "gain" functions serve to adjust the relationship between a setting input signal and the output frequency. A setting input signal is such as 0 to 5 V DC/0 to 10 V or 4 to 20 mA DC externally input to set the output frequency.
- Set the terminal 2 input bias frequency by using C2 (Pr. 902).
  (It is initially set to the frequency at 0 V.)
- Set the output frequency to the frequency command voltage (current) set by the Pr. 73 "Analog input selection" by using Pr. 125.
- Set the bias frequency of the terminal 1 input using C12 (Pr. 917).
  (It is initially set to the frequency at 0 V.)
- Set the gain frequency of the terminal 1 input using C14 (Pr. 918).
  (It is initially set to the frequency at 10 V.)
- Set the bias frequency of the terminal 4 input using C5 (Pr. 904).
  (It is initially set to the frequency at 4 mA.)
- Set the output frequency for 20 mA of the frequency command current (4 to 20 mA) by using Pr. 26.

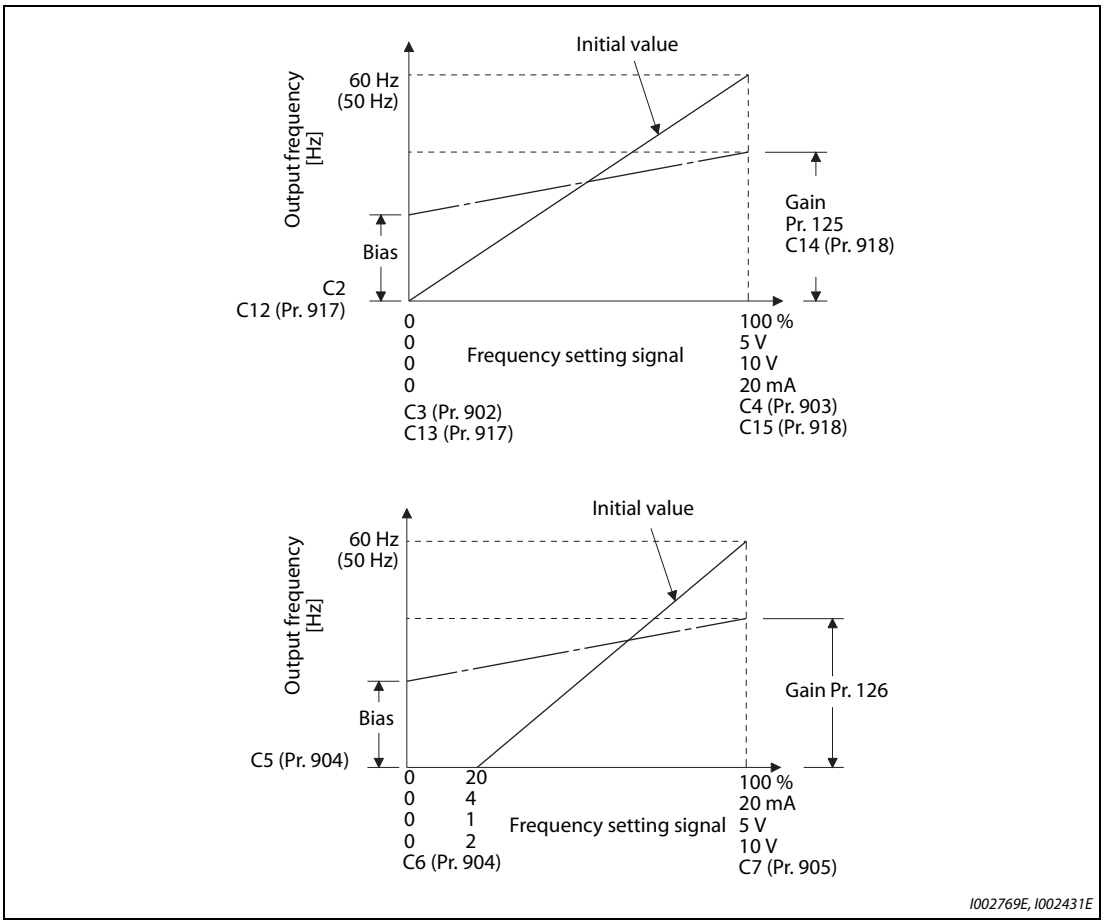


***Fig. 5-190:*** *Signal adjustment of the terminals*

- There are three methods to adjust the frequency setting voltage (current) bias/gain.
  - ❶( Adjust any point with application of a voltage (current) between terminals 2 and 5 (4 and 5). Refer to page 5-393.
  - ❷( Adjust any point without application of a voltage (current) between terminals 2 and 5 (4 and 5). Refer to page 5-394.
  - ❸( Adjust frequency only without adjustment of voltage (current). Refer to page 5-395.

**NOTES**

Performing terminal 2 calibration that includes a change of the setting frequency incline changes terminal 1 setting.

Calibration with voltage input to terminal 1 sets (terminal 2 (4) analog value + terminal 1 analog value) as the analog calibration value.

Always calibrate the input after changing the voltage/current input signal with Pr. 73, Pr. 267, and the voltage/current input selection switch.

**Analog input display unit changing (Pr. 241)**

- The analog input display unit (%/V/mA) for analog input bias and gain calibration can be changed.
- Depending on the terminal input specification set to Pr. 73, Pr. 267, and voltage/current input switches, the display unit of C3 (Pr. 902), C4 (Pr. 903), C6 (Pr. 904), and C7 (Pr. 905) change as described below:

| Analog command (terminals 2, 4) (depending on Pr. 73, Pr. 267, and voltage/current input switch) | Pr. 241 = 0 (initial value) | Pr. 241 = 1 |
|---|---|---|
| 0 to 5 V input | 0 to 5 V ➔ 0 to 100% (0.1%) | 0 to 100% ➔ 0 to 5 V (0.01 V) |
| 0 to 10 V input | 0 to 10 V ➔ 0 to 100% (0.1%) | 0 to 100% ➔ 0 to 5 V (0.01 V) display |
| 0 to 20 mA input | 0 to 20 mA ➔ 0 to 100% (0.1%) | 0 to 100% ➔ 0 to 20 mA (0.01 mA) |

***Tab. 5-152:*** *Units when displaying the set value*

**NOTE**

When the terminal 1 input specification (0 to ±5 V, 0 to ±10 V) does not agree with the main speed (terminal 2, terminal 4 input) specification (0 to 5 V, 0 to 10 V, 0 to 20 mA), and if the voltages are applied to terminal 1, the analog input is not correctly displayed. (For example, in the initial status, when 0 V is applied to terminal 2 and 10 V is applied to terminal 1, and the analog value is displayed as 5 V (100%).)
Use the inverter with the Pr. 241 = "0 (initial value)" setting. (0% display).

### Frequency setting voltage (current) bias/gain adjustment method

❶ Adjust any point with application of a voltage (current) between terminals 2 and 5 (4 and 5). (Frequency setting gain adjustment example)

| Operation |
|---|
| ① Screen at power-ON<br>The monitor display appears. |
| ② Changing the operation mode<br>Press [PU/EXT] to choose the PU operation mode. [PU] indicator is lit.<br>Calibration is also possible in the External operation mode. |
| ③ Parameter setting mode<br>Press [MODE] to choose the parameter setting mode. (The parameter number read previously appears.) |
| ④ Calibration parameter selection<br>Turn ⊛ until C. . . . appears. Press [SET] to display C -- -- -- -- . |
| ⑤ Selecting the parameter number<br>Turn ⊛ to choose C 4 C4 (Pr. 903) "Terminal 2 frequency setting gain" for the terminal 1.<br>and C 7 C7 (Pr. 905) "Terminal 4 frequency setting gain" for the terminal 4. |
| ⑥ Analog voltage (current) display<br>Press [SET] to display the analog voltage (current) % currently applied to the terminal 1 (4).<br>Do not touch ⊛ until calibration is completed. |
| ⑦ Voltage (current) application<br>Apply a 5 V (20 mA). (Turn the external potentiometer connected across terminals 1 and 5 (terminals 4 and 5) to a desired position.) |
| ⑧ Setting completed<br>Press [SET] to enter the setting. The analog voltage (current) % and C 4 ( C 7 ) flicker alternately.<br>• Press ⊛ to read another parameter.<br>• Press [SET] to return to the C -- -- -- -- display.<br>• Press [SET] twice to show the next parameter. |

***Tab. 5-153:*** *Bias and gain adjustment by application of an reference signal*

❷ Adjust any point without application of a voltage (current) between terminals 2 and 5 (4 and 5) (Frequency setting gain adjustment example)

| Operation |
|---|
| ① Screen at power-ON<br>The monitor display appears. |
| ② Changing the operation mode<br>Press [PU/EXT] to choose the PU operation mode. [PU] indicator is lit.<br>Calibration is also possible in the External operation mode. |
| ③ Parameter setting mode<br>Press [MODE] to choose the parameter setting mode. (The parameter number read previously appears.) |
| ④ Calibration parameter selection<br>Turn ⊙ until C. . . . appears. Press [SET] to display C -- -- -- -- . |
| ⑤ Selecting the parameter number<br>Turn ⊙ to choose C 4 C4 (Pr. 903) "Terminal 2 frequency setting gain" for the terminal 1.<br>and C 7 C7 (Pr. 905) "Terminal 4 frequency setting gain" for the terminal 4. |
| ⑥ Analog voltage (current) display<br>Press [SET] to display the analog voltage (current) % currently applied to the terminal 1 (4). |
| ⑦ Analog voltage (current) adjustment<br>When ⊙ is turned, the gain voltage (current) % currently set to the parameter is displayed.<br>When ⊙ until the desired gain voltage (current) % is displayed. |
| ⑧ Setting completed<br>Press [SET] to enter the setting. The analog voltage (current) % and C 4 (C 7) flicker alternately.<br>• Turn ⊙ to read another parameter.<br>• Press [SET] to return to the C -- -- -- -- display.<br>• Press [SET] twice to show the next parameter. |

***Tab. 5-154:*** *Bias and gain adjustment without application of an reference signal*

**NOTE**

By pressing the setting dial after step 6, the present frequency setting bias/gain setting can be confirmed. Confirmation is not possible after executing step 7.

❸ Adjust frequency only without adjustment of gain voltage (current)
(When changing the gain frequency from 60 Hz to 50 Hz)

| Operation |
|---|
| ① Parameter selection<br>Turn to choose P. 125 (Pr. 125) for the terminal 2, and P. 126 (Pr. 126) for the terminal 4.<br>Press SET to show the present set value. (150.00%) |
| ② Torque setting change<br>Turn to change the set value to " 50.00 ". (130.00%)<br>Press SET to enter the setting. " 50.00 " and " P. 125 (P. 126 )" flicker alternately. |
| ③ Checking the mode/monitor<br>Press MODE three times to change to the monitor / frequency monitor. |
| ④ Start<br>Turn ON the start switch (STF or STR) to apply a voltage across terminals 1 and 5 (4 and 5),<br>Operation is performed with 130% torque. |

***Tab. 5-155:*** *Adjusting only the frequency without adjustment of a voltage (current)*

**NOTES**

If the frequency meter (display meter) connected across the terminals FM and SD (CA and 5) does not indicate exactly 60 Hz, set the calibration parameter C0 "FM/CA terminal calibration". (Refer to page 5-337.)

If the gain and bias of voltage (current) setting voltage are too close, an error ("Er3") may be displayed at setting.

Changing C4 (Pr. 903) or C7 (Pr. 905) (gain adjustment) will not change Pr. 20.
Input to the terminal 1 (frequency setting auxiliary input) is added to the frequency setting signal.

For operation outline of the parameter unit (FR-PU07), refer to the Instruction Manual of the FR-PU07.

To set the value to 120 Hz or higher, the Pr. 18 "High speed maximum frequency" needs to be 120 Hz or higher. (Refer to page 5-300.)

Make the bias frequency setting using the calibration parameter C2 (Pr. 902) and C5 (Pr. 904). (Refer to page 5-391.)

**CAUTION:**

***Be cautious when setting any value other than "0" as the bias frequency at 0 V (0 mA). Even if a speed command is not given, simply turning ON the start signal will start the motor at the preset frequency.***

| Parameters referred to | | | |
|---|---|---|---|
| Pr. 1 | Maximum frequency | => | page 5-300 |
| Pr. 18 | High speed maximum frequency | => | page 5-300 |
| Pr. 20 | Acceleration/deceleration reference frequency | => | page 5-225 |
| Pr. 73 | Analog input selection | => | page 5-376 |
| Pr. 267 | Terminal 4 input selection | => | page 5-376 |
| Pr. 79 | Operation mode selection | => | page 5-255 |
| Pr. 858 | Terminal 4 function assignment | => | page 5-381 |
| Pr. 868 | Terminal 1 function assignment | => | page 5-381 |

## 5.12.6 Bias and gain for torque (magnetic flux) and set voltage (current)

Sensorless Vector PM

The magnitude (slope) of the torque can be set as desired in relation to the torque setting signal (0 to 5 V DC, 0 to 10 V DC, or 4 to 20 mA).

Use Pr. 73 "Analog input selection" or Pr. 267 "Terminal 4 input selection" to switch among input 0 to 5 V DC, 0 to 10 V, and 4 to 20 mA. (Refer to page 5-376.)

| Pr. | Name | Initial value | Setting range | Description | |
|---|---|---|---|---|---|
| C16 (919) ① T110 | Terminal 1 bias command (torque/ magnetic flux) | 0% | 0 to 400% | Set the torque (magnetic flux) of the bias side of terminal 1 input. | |
| C17 (919) ① T111 | Terminal 1 bias (torque/magnetic flux) | 0% | 0 to 300% | Set the converted % on bias side voltage of terminal 1 input. | |
| C18 (920) ① T112 | Terminal 1 gain command (torque/ magnetic flux) | 150% | 0 to 400% | Set the torque (magnetic flux) of the gain (maximum) of terminal 1 input. | |
| C19 (920) ① T113 | Terminal 1 gain (torque/magnetic flux) | 100% | 0 to 300% | Set the converted % on the gain side voltage of terminal 1 input. | |
| C38 (932) ① T410 | Terminal 4 bias command (torque/ magnetic flux) | 0% | 0 to 400% | Set the torque (magnetic flux) of the bias side of terminal 4 input. | |
| C39 (932) ① T411 | Terminal 4 bias (torque/magnetic flux) | 20% | 0 to 300% | Set the converted % on the bias side current (voltage) of terminal 4 input. | |
| C40 (933) ① T412 | Terminal 4 gain command (torque/ magnetic flux) | 150% | 0 to 400% | Set the torque (magnetic flux) of the gain (maximum) of terminal 4 input. | |
| C41 (933) ① T413 | Terminal 4 gain (torque/magnetic flux) | 100% | 0 to 300% | Set the converted % on gain side current (voltage) of terminal 4 input. | |
| 241 M043 | Analog input display unit switchover | 0 | 0 | % display | Select the unit for analog input display. |
| | | | 1 | V/mA display | |

① The parameter number in parentheses is the one for use with the parameter unit (FR-PU07).

### Changing the function of analog input terminal

The initial value for terminal 1 used as analog input is set to speed setting auxiliary (speed limit auxiliary), and terminal 4 is set to speed command (speed control). To use the analog input terminal as torque command, torque limit, or magnetic flux command, set Pr. 868 "Terminal 1 function assignment", Pr. 858 "Terminal 4 function assignment" to change the function. (Refer to page 5-381.)
The magnetic flux command is valid under vector control only.

### Relationship between the analog input terminal function and the calibration parameter

● Calibration parameter according to the terminal 1 function

| Pr. 868 setting | Terminal function | Calibration parameter | |
|---|---|---|---|
| | | Bias setting | Gain setting |
| 0 (initial value) | Frequency (speed) setting auxiliary | C2 (Pr. 902) "Terminal 2 frequency setting bias frequency"<br>C3 (Pr. 902) "Terminal 2 frequency setting bias"<br>C5 (Pr. 904) "Terminal 4 frequency setting bias frequency"<br>C6 (Pr. 904) "Terminal 4 frequency setting bias " | Pr. 125 "Terminal 2 frequency setting gain frequency"<br>C4 (Pr. 903) "Terminal 2 frequency setting gain"<br>Pr. 126 "Terminal 4 frequency setting gain frequency"<br>C7 (Pr. 905) "Terminal 4 frequency setting gain" |
| 1 | Magnetic flux command | C16 (Pr. 919) "Terminal 1 bias command (torque/magnetic flux)"<br>C17 (Pr. 919) "Terminal 1 bias (torque/ magnetic flux)" | C18 (Pr. 920) "Terminal 1 gain command (torque/magnetic flux)"<br>C19 (Pr. 920) "Terminal 1 gain (torque/ magnetic flux)" |
| 2 | Regenerative driving torque limit | C16 (Pr. 919) "Terminal 1 bias command (torque/magnetic flux)"<br>C17 (Pr. 919) "Terminal 1 bias (torque/ magnetic flux)" | C18 (Pr. 920) "Terminal 1 gain command (torque/magnetic flux)"<br>C19 (Pr. 920) "Terminal 1 gain (torque/ magnetic flux)" |
| 3 | Torque command | | |
| 4 | Stall prevention operation level ① /torque limit/ torque command | | |
| 5 | Forward/reverse rotation speed limit | C12 (Pr. 917) "Terminal 1 bias frequency (speed)"<br>C13 (Pr. 917) "Terminal 1 bias (speed)" | C14 (Pr. 918) "Terminal 1 gain frequency (speed)"<br>C15 (Pr. 918) "Terminal 1 gain (speed)" |
| 6 | Torque bias input | C16 (Pr. 919) "Terminal 1 bias command (torque/magnetic flux)"<br>C17 (Pr. 919)" Terminal 1 bias (torque/ magnetic flux)" | C18 (Pr. 920) "Terminal 1 gain command (torque/magnetic flux)"<br>C19 (Pr. 920) "Terminal 1 gain (torque/ magnetic flux)" |
| 9999 | No function | — | — |

***Tab. 5-156:*** *Terminal 1 functional calibration parameter*

● Calibration parameter according to the terminal 4 function

| Pr. 858 setting | Terminal function | Calibration parameter | |
|---|---|---|---|
| | | **Bias setting** | **Gain setting** |
| 0 (initial value) | Frequency (speed) command/ Speed limit | C5 (Pr. 904) "Terminal 4 frequency setting bias frequency"<br>C6 (Pr. 904) "Terminal 4 frequency setting bias" | Pr. 126 "Terminal 4 frequency setting gain frequency"<br>C7 (Pr. 905) "Terminal 4 frequency setting gain" |
| 1 | Magnetic flux command | C38 (Pr. 932) "Terminal 4 bias command (torque/magnetic flux)"<br>C39 (Pr. 932) "Terminal 4 bias (torque/ magnetic flux)" | C40 (Pr. 933) "Terminal 4 gain command (torque/magnetic flux)"<br>C41 (Pr. 933) "Terminal 4 gain (torque/ magnetic flux)" |
| 4 | Stall prevention operation level ①/ torque limit | C38 (Pr. 932) "Terminal 4 bias command (torque/magnetic flux)"<br>C39 (Pr. 932) "Terminal 4 bias (torque/ magnetic flux)" | C40 (Pr. 933) "Terminal 4 gain command (torque/magnetic flux)"<br>C41 (Pr. 933) "Terminal 4 gain (torque/ magnetic flux)" |
| 9999 | No function | — | — |

***Tab. 5-157:*** *Terminal 4 functional calibration parameter*

① Adjustment of the bias and gain for stall prevention operation level is done by Pr. 148 "Stall prevention level at 0 V input" and Pr. 149 "Stall prevention level at 10 V input".

**Change the torque at maximum analog input. (C18 (Pr. 920), C40 (Pr. 933))**

To only change the torque setting (gain) of the maximum analog input voltage (current), set to C18 (Pr. 920), C40 (Pr. 933).

**Calibration of analog input bias and gain**
**(C16 (Pr. 919) to C19 (Pr. 920), C38 (Pr. 932) to C41 (Pr. 933))**

- The "bias" and "gain" functions are used to adjust the relationship between the setting input signal such as 0 to 5 V DC/0 to 10 V DC or 4 to 20 mA DC entered from outside for torque command or setting the torque limit and the torque.
- Set the bias torque of the terminal 1 input using C16 (Pr. 919).
  (Shipped from factory with torque for 0 V)
- Set the torque against the torque command voltage set by Pr. 73 "Analog input selection" with C18 (Pr. 920). (Initial value is 10 V.)
- Set the bias torque of the terminal 4 input using C38 (Pr. 932).
  (The initial value is the torque for 4 mA.)
- Set the torque against the 20 mA for torque command current (4 to 20 mA) with C40 (Pr. 933).

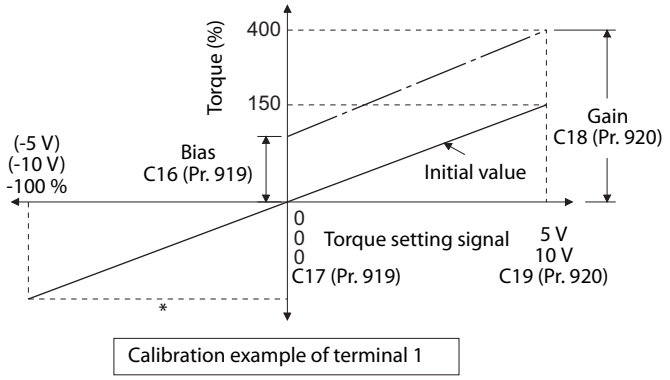


* A negative voltage (0V to -10 V (-5 V)) is valid as a torque command.
If a negative voltage is input as a torque limit value, the torque limit is regarded as "0".

I002648E

***Fig. 5-191:*** *Signal adjustment of terminal 1*

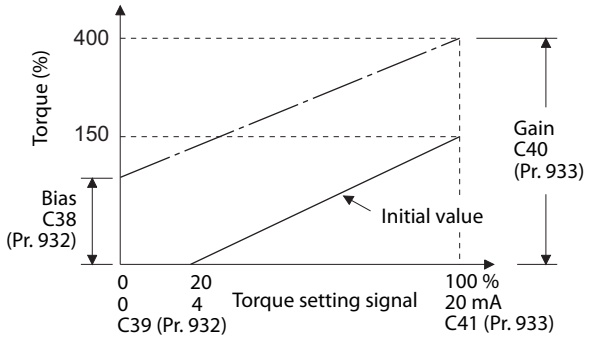


I002649E

***Fig. 5-192:*** *Signal adjustment of terminal 4*

- There are three methods to adjust the torque setting voltage (current) bias and gain.
  - ❶ Method to adjust arbitrary point with application of a voltage (current) between terminals 1 and 5 (4 and 5). Refer to page 5-393.
  - ❷ Method to adjust arbitrary point without application of a voltage (current) between terminals 1 and 5 (4 and 5). Refer to page 5-394.
  - ❸ Method to adjust only torque without adjusting voltage (current). Refer to page 5-395.

**NOTE**

Always calibrate the input after changing the voltage/input signal with Pr. 73, Pr. 267, and the voltage/current input selection switch.

**Analog input display unit changing (Pr. 241)**

- The analog input display unit (%/V/mA) for analog input bias and gain calibration can be changed.
- Depending on the terminal input specification set to Pr. 73 and Pr. 267, the display units of C17 (Pr. 919), C19 (Pr. 920), C39 (Pr. 932), and C41 (Pr. 933) will change as shown below.

| Analog command (terminals 1 and 4) (Depends on Pr. 73, Pr. 267) | Pr. 241 = 0 (initial value) | Pr. 241 = 1 |
|---|---|---|
| 0 to 5 V input | 0 to 5 V ➔ 0 to 100% (0.1%) display | 0 to 100% ➔ 0 to 5 V (0.01 V) display |
| 0 to 10 V input | 0 to 10 V ➔ 0 to 100% (0.1%) display | 0 to 100% ➔ 0 to 10 V (0.01 V) display |
| 0 to 20 mA input | 0 to 20 mA ➔ 0 to 100% (0.1%) display | 0 to 100% ➔ 0 to 20 mA (0.01 mA) |

***Tab. 5-158:*** *Units when displaying the set value*

### Adjust method for the torque setting voltage (current) bias and gain

❶ Adjust any point with application of a voltage (current) between terminals 1 and 5 (4 and 5).

| Operation |
|---|
| ① Screen at power-ON<br>The monitor display appears. |
| ② Changing the operation mode<br>Press PU/EXT to choose the PU operation mode. [PU] indicator is lit.<br>Calibration is also possible in the External operation mode. |
| ③ Parameter setting mode<br>Press MODE to choose the parameter setting mode. (The parameter number read previously appears.) |
| ④ Calibration parameter selection<br>Turn ⊙ until C. . . . appears. Press SET to display C -- -- -- -- . |
| ⑤ Selecting the parameter number<br>Turn ⊙ to choose C 19 (C19(Pr. 920) "Terminal 1 gain (torque/magnetic flux)") for the terminal 1, and<br>C 4 1 (C41(Pr. 933) "Terminal 4 gain (torque/magnetic flux)") for the terminal 4. |
| ⑥ Analog voltage (current) display<br>Press SET to display the analog voltage (current) % currently applied to the terminal 1 (4).<br>Do not touch ⊙ until calibration is completed. |
| ⑦ Voltage (current) application<br>Apply a 5 V (20 mA). (Turn the external potentiometer connected across terminals 1 and 5 (terminals 4 and 5) to a desired position.) |
| ⑧ Setting completed<br>Press SET to enter the setting. The analog voltage (current) % and C 19 (C 4 1) flicker alternately.<br>• Turn ⊙ to read another parameter.<br>• Press SET to return to the C -- -- -- -- display.<br>• Press SET twice to show the next parameter. |

***Tab. 5-159:*** *Bias and gain adjustment by application of an reference signal*

❷ Adjust any point without application of a voltage (current) between terminals 1 and 5 (4 and 5).

| Operation |
|---|
| ① Screen at power-ON<br>The monitor display appears. |
| ② Changing the operation mode<br>PU/EXT Press PU/EXT to choose the PU operation mode. [PU] indicator is lit.<br>Calibration is also possible in the External operation mode. |
| ③ Parameter setting mode<br>Press MODE to choose the parameter setting mode. (The parameter number read previously appears.) |
| ④ Calibration parameter selection<br>Turn until C. . . . appears. Press SET to display C -- -- -- -- . |
| ⑤ Selecting the parameter number<br>Turn to choose C 19 C19 (Pr. 920) "Terminal 1 gain (torque/magnetic flux)" for the terminal 1, and<br>C 4 1 C41 (Pr. 933) "Terminal 4 gain (torque/magnetic flux)" for the terminal 4. |
| ⑥ Analog voltage (current) display<br>Press SET to display the analog voltage (current) % currently applied to the terminal 1 (4). |
| ⑦ Analog voltage (current) adjustment<br>When is turned, the gain voltage (current) % currently set to the parameter is displayed.<br>Turn until the desired gain voltage (current) % is displayed. |
| ⑧ Setting completed<br>Press SET to enter the setting. The analog voltage (current) % and C 19 (C 4 1) flicker alternately.<br>• Turn to read another parameter.<br>• Press SET to return to the C -- -- -- -- display.<br>• Press SET twice to show the next parameter. |

***Tab. 5-160:*** *Bias and gain adjustment without application of an reference signal*

**NOTE**

By pressing the setting dial after step 6, the present torque setting bias/gain setting can be confirmed.

❸ Adjust torque only without adjustment of gain voltage (current).
(When changing the gain torque from 150% to 130%.)

| Operation |
|---|
| ① Parameter selection<br>Turn to choose C 18 (Pr. 920) for the terminal 2, and C 40 (Pr. 933) for the terminal 4.<br>Press SET to show the present set value. (150.00%) |
| ② Torque setting change<br>Turn to change the set value to "130.00". (130.00%)<br>Press SET to enter the setting. "130.00" and "C 18 (C 40)" flicker alternately. |
| ③ Checking the mode/monitor<br>Press MODE three times to change to the monitor / frequency monitor. |
| ④ Start<br>Turn ON the start switch (STF or STR) to apply a voltage across terminals 1 and 5 (4 and 5).<br>Operation is performed with 130% torque. |

***Tab. 5-161:*** *Adjusting only the torque without adjustment of a voltage (current)*

**NOTES**

If the gain and bias of torque setting are too close, an error ("Er3") may displayed at setting.

For operation outline of the parameter unit (FR-PU07), refer to the Instruction Manual of the FR-PU07.

Set the bias torque setting using the calibration parameter C16 (Pr. 919) or C38 (Pr. 932). (Refer to page 5-399.)

**CAUTION:**

***Be cautious when setting any value other than "0" as the bias torque at 0 V (0 mA). Even if a torque command is not given, simply turning ON the start signal will start the motor at the preset frequency.***

| Parameters referred to | | | |
|---|---|---|---|
| Pr. 20 | Acceleration/deceleration reference frequency | => | page 5-225 |
| Pr. 73 | Analog input selection | => | page 5-376 |
| Pr. 267 | Terminal 4 input selection | => | page 5-376 |
| Pr. 79 | Operation mode selection | => | page 5-255 |
| Pr. 858 | Terminal 4 function assignment | => | page 5-381 |
| Pr. 868 | Terminal 1 function assignment | => | page 5-381 |

## 5.12.7 Checking of current input on analog input terminal

When current is input to the analog input terminal 2 and terminal 4, operation when the current input has gone below the specified level (loss of analog current input) can be selected. It is possible to continue the operation even when the analog current input is lost.

| Pr. | Name | Initial value | Setting range | Description |
|---|---|---|---|---|
| 573<br>T052 | 4 mA input check selection | 9999 | 1 | Continues the operation with output frequency before the current input loss. |
| | | | 2 | 4 mA input fault is activated when the current input loss is detected. |
| | | | 3 | Decelerates to stop when the current input loss is detected. After it is stopped, 4 mA input fault (E.LCI) is activated. |
| | | | 4 | Continues operation with the Pr. 777 setting. |
| | | | 9999 | No current input check |
| 777<br>T053 | 4 mA input fault operation frequency | 9999 | 0 to 590 Hz | Set the running frequency for current input loss. (Valid when Pr. 573 = "4") |
| | | | 9999 | No current input check when Pr. 573 = "4" |
| 778<br>T054 | 4 mA input check filter | 0 s | 0 to 10 s | Set the current input loss detection time. |

**Analog current input loss condition (Pr. 778)**

- When the condition of current input to the terminal 4 (terminal 2) continues to be 2 mA or less for Pr. 778 setting time, it is considered as loss of analog current input and alarm (LF) signal is turned ON. The LF signal will turn OFF when the current input becomes 3 mA or higher.
- For the LF signal, set "98 (positive logic) or 198 (negative logic)" in any of Pr. 190 to Pr. 196 "output terminal function selection" to assign the function.

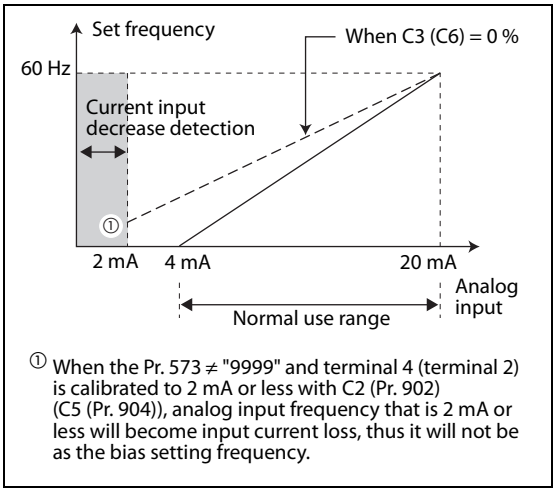


***Fig. 5-193:***
*4mA input check of current input*

**NOTE** Changing the terminal assignment using Pr. 190 to Pr. 196 (output terminal function selection) may affect the other functions. Set parameters after confirming the function of each terminal.

**Continue operation at analog current input loss (Pr. 573 = "1, 4", Pr. 777)**

- When Pr. 573 = "1", operation is continued with the output frequency before the current input loss.
- When Pr. 573 = "4" and Pr. 777 ≠ "9999", operation is continued with frequency set in Pr. 777.
- When the start command is turned OFF during the input current loss, deceleration stop is immediately performed, and the operation is not restored even if start command is input again.
- When the current input is restored, the LF signal is turned OFF, and operation is performed according to the current input.
- External operation

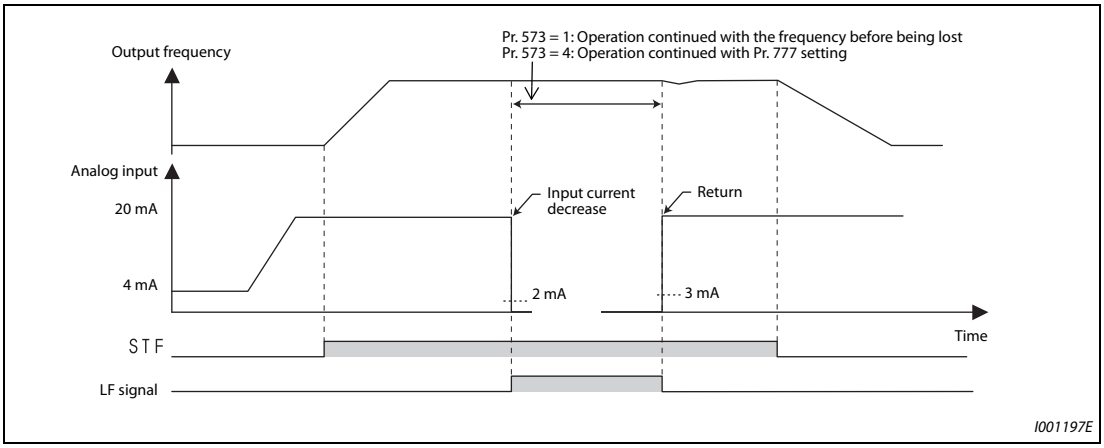


***Fig. 5-194:*** *4mA input check during external operation (Pr. 573 = 1 or 4)*

- PID control (reverse action)

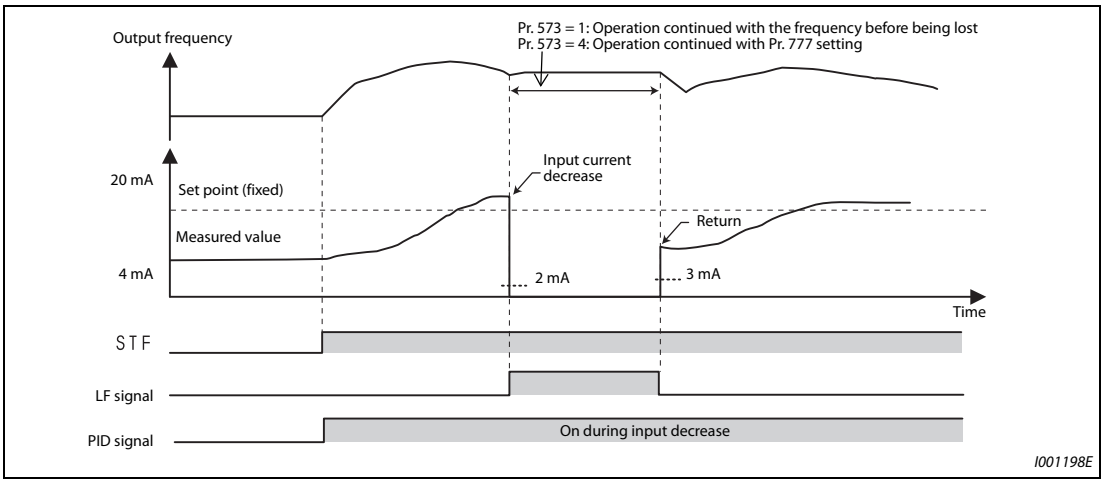


***Fig. 5-195:*** *4mA input check during PID control (reverse action, Pr. 573 = 1 or 4)*

**NOTE** When the setting is changed to continuously operate after the input current loss (Pr. 573 = "1, 4"), the motor will operate as the frequency before loss is 0 Hz.

**Fault output (Pr. 573 = "2")**

- When the analog current input becomes 2 mA or lower, 4 mA input fault (E.LCI) will be activated and the output is shut off.
- PID control (reverse action)

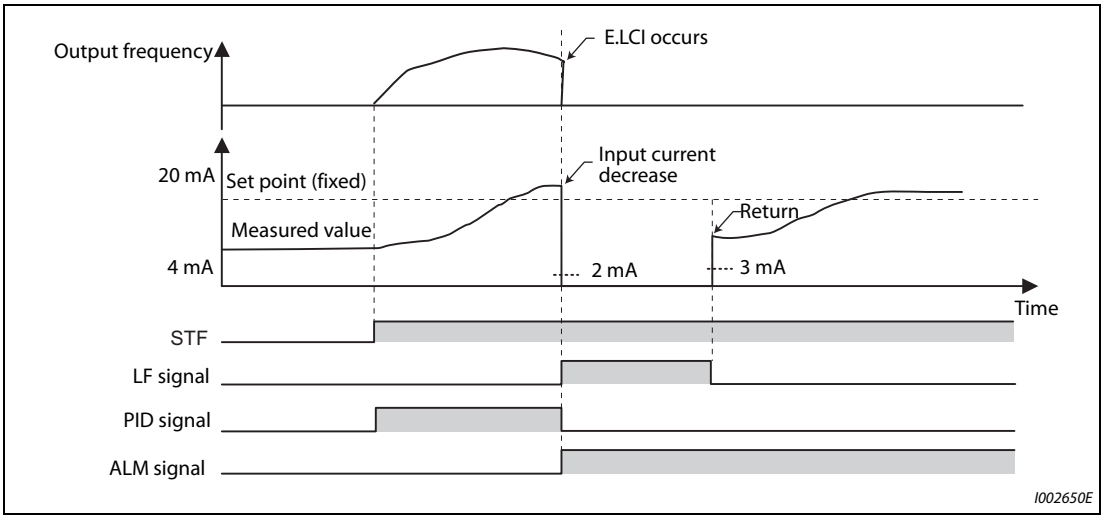


***Fig. 5-196:*** *Fault output (Pr. 573 = 2)*

**Fault output after deceleration to stop (Pr. 573 = "3")**

- When the analog current input becomes 2 mA or lower, 4 mA input fault (E.LCI) will be activated after the deceleration stop and the output is shut off.
- When the analog current input is restored during the deceleration, it will accelerate again and operate according to the current input.
- PID control (reverse action)

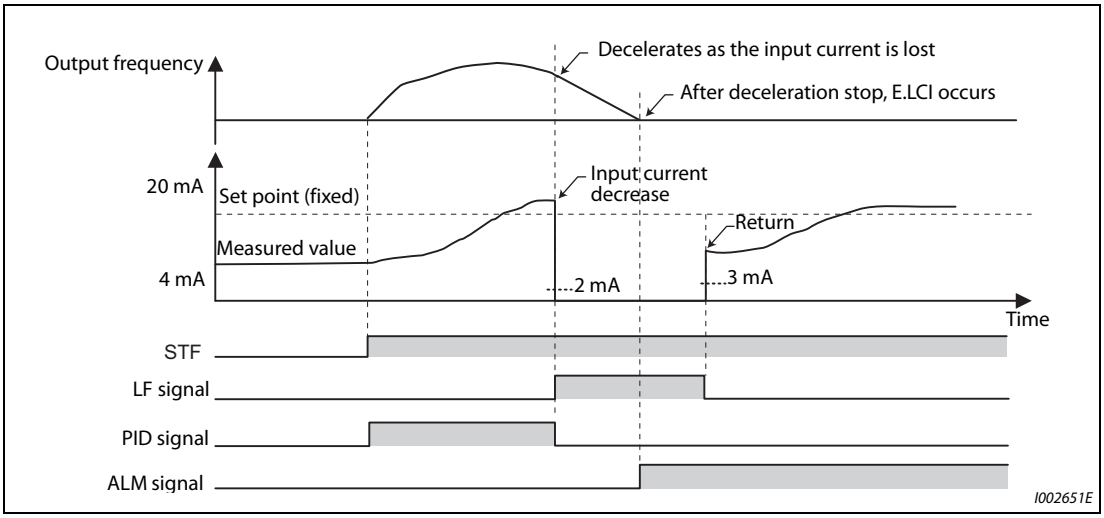


***Fig. 5-197:*** *Fault output after deceleration to stop (Pr. 573 = 3)*

- The analog input current is restored during deceleration under PID control (reverse action)

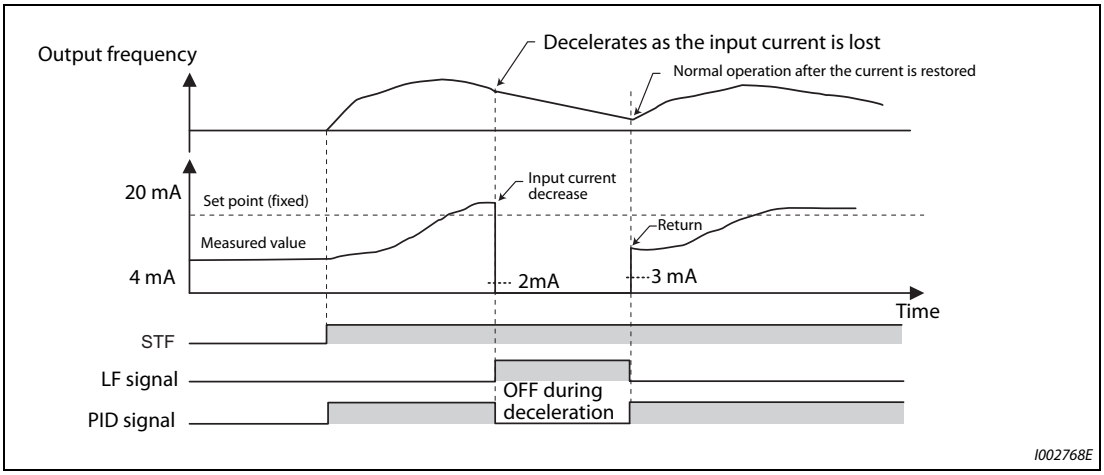


***Fig. 5-198:*** *Fault output after deceleration under PID control (reverse action) (Pr. 573 = 3)*

### Function related to current input check

| Function | Operation | Refer to page |
|---|---|---|
| Minimum frequency | When the operation continues, setting of the minimum frequency against the running frequency is valid even during the current input loss. | 5-300 |
| Multi-speed operation | The multi-speed setting signal is prioritized even during current input loss (operate according to multi-speed setting even during operation in continuous frequency or during deceleration stop).<br>When the multi-speed setting signal is turned OFF due to input current loss condition during the multi-speed operation, it will perform deceleration stop even if it is set to continue operation for current input loss. | 5-182 |
| JOG operation | JOG operation is prioritized even during current input loss (switch to JOB operation even during operation with continuous frequency or during deceleration stop).<br>When the JOG signal is turned OFF due to input current loss condition during the JOG operation, it will perform deceleration stop even if it is set to continue operation for current input loss. | 5-278 |
| MRS signal | MRS signal is enabled even during current input loss (output is shut off with MRS signal ON even during operation with continuous frequency or during deceleration stop). | 5-413 |
| Remote setting | During operation with remote setting and transferred to operation continuation due to input current loss, acceleration, deceleration, and clear by the remote setting is invalid. They will become valid after restoring the current input loss. | 5-239 |
| Retry function | When the protective function has operated during the operation continuation due to current input loss, and retry was a success, operation will continue without clearing the operation continuation frequency. | 5-297 |
| Added compensation, override compensation | During operation with added compensation or override compensation and transferred to operation continuation due to input current loss, added compensation and override compensation will become invalid. They will become valid after restoring the current input loss. | 5-382 |
| Input filter time constant | Current input loss is detected with the value before the filter.<br>Operation continuation before the input loss will use the value after the filter. | 5-386 |
| PID control | PID calculation is stopped during the current input loss. However, PID control will not be disabled (normal operation).<br>During the pre-charge, end determination or fault determination by the pre-charge function will not be performed when the current input loss occurs.<br>Sleep function is prioritized even during current input loss. When the clearing condition of the sleep function is met during the current input loss, operation is restored with continuation frequency. | 5-504 |
| Power failure stop | The power failure stop function is prioritized even if power failure current input loss is detected.<br>Set frequency after the power failure stop and re-acceleration is the operation continuation frequency at the current input loss.<br>When the E.LCI generation at the time of current input loss is selected, E.LCI will be generated after the power failure stop. | 5-558 |
| Traverse function | Traverse operation is performed based on frequency even during the operation continuation during current input loss. | 5-482 |

***Tab. 5-162:*** *Functions related to the 4mA input check function*

| Parameters referred to | | | |
|---|---|---|---|
| Pr. 73 | Analog input selection | => | page 5-376 |
| Pr. 267 | Terminal 4 input selection | => | page 5-376 |

## 5.12.8 Input terminal function selection

Use the following parameters to select or change the input terminal functions.

| Pr. | Name | Initial value | Initial signal | Setting range |
|---|---|---|---|---|
| 178<br>T700 | STF terminal function selection | 60 | STF (Forward rotation command) | 0 to 20, 22 to 28, 37, 42 to 47, 50, 51, 60, 62, 64 to 74, 76, 77 to 80, 87, 92, 93, 9999 |
| 179<br>T7001 | STR terminal function selection | 61 | STR (Reverse rotation command) | 0 to 20, 22 to 28, 37, 42 to 47, 50, 51, 61, 62, 64 to 74, 76, 77 to 80, 87, 92, 93, 9999 |
| 180<br>T702 | RL terminal function selection | 0 | RL (Low-speed operation command) | 0 to 20, 22 to 28, 37, 42 to 47, 50, 51, 62, 64 to 74, 76, 77 to 80, 87, 92, 93, 9999 |
| 181<br>T703 | RM terminal function selection | 1 | RM (Middle-speed operation command) | |
| 182<br>T704 | RH terminal function selection | 2 | RH (High-speed operation command) | |
| 183<br>T705 | RT terminal function selection | 3 | RT (Second function selection) | |
| 184<br>T706 | AU terminal function selection | 4 | AU (Terminal 4 input selection) | |
| 185<br>T707 | JOG terminal function selection | 5 | JOG (Jog operation selection) | |
| 186<br>T708 | CS terminal function selection | 6 | CS (Electronic bypass function) | |
| 187<br>T709 | MRS terminal function selection | 24 ① | MRS (Output stop) | |
| | | 10 ② | X10 (Inverter run enable signal) | |
| 188<br>T710 | STOP terminal function selection | 25 | STP (STOP) (Start self-holding selection) | |
| 189<br>T711 | RES terminal function selection | 62 | RES (Inverter reset) | |

| Pr. | Name | Initial value | Setting range | Description |
|---|---|---|---|---|
| 699<br>T740 | Input terminal filter | 9999 | 5 to 50 ms | Set the time to delay the input terminal response. |
| | | | 9999 | No input terminal filter |

① The initial value is for standard models and IP55 compatible models.

② The initial value is for separated converter types.

### Input terminal function assignment

- Using Pr. 178 to Pr. 189, set the functions of the input terminals
- Refer to the following table and set the parameters.

| Setting | Signal name | Function | | Related parameter | Refer to page |
|---|---|---|---|---|---|
| 0 | RL | Pr. 59 = 0 (initial value) | Low-speed operation command | Pr. 4 to Pr. 6, Pr. 24 to Pr. 27, Pr. 232 to Pr. 239 | 5-182 |
| | | Pr. 59 ≠ 0 ① | Remote setting (setting clear) | Pr. 59 | 5-239 |
| | | Pr. 270 = 1, 3, 11, 13 ② | Stop-on-contact selection 0 | Pr. 270, Pr. 275, Pr. 276 | 5-474 |
| 1 | RM | Pr. 59 = 0 (initial value) | Middle-speed operation command | Pr. 4 to Pr. 6, Pr. 24 to Pr. 27, Pr. 232 to Pr. 239 | 5-182 |
| | | Pr. 59 ≠ 0 ① | Remote setting (deceleration) | Pr. 59 | 5-239 |
| 2 | RH | Pr. 59 = 0 (initial value) | High-speed operation command | Pr. 4 to Pr. 6, Pr. 24 to Pr. 27, Pr. 232 to Pr. 239 | 5-182 |
| | | Pr. 59 ≠ 0 ① | Remote setting (acceleration) | Pr. 59 | 5-239 |
| 3 | RT | Second function selection | | Pr. 44 to Pr. 51, Pr. 450 to Pr. 463, Pr. 569, Pr. 832, Pr. 836, etc. | 5-415 |
| | | Pr. 270 = 1, 3, 11, 13 ② | Stop-on-contact selection 1 | Pr. 270, Pr. 275, Pr. 276 | 5-474 |
| 4 | AU | Terminal 4 input selection | | Pr. 267 | 5-376 |
| 5 | JOG | Jog operation selection | | Pr. 15, Pr. 16 | 5-278 |
| 6 | CS | Selection of automatic restart after instantaneous power failure, flying start | | Pr. 57, Pr. 58, Pr. 162 to Pr. 165, Pr. 299, Pr. 611 | 5-540, 5-549 |
| | | Electronic bypass function | | Pr. 57, Pr. 58, Pr. 135 to Pr. 139, Pr. 159 | 5-457 |
| 7 | OH | External thermal relay input ③ | | Pr. 9 | 5-284 |
| 8 | REX | 15-speed selection (Combination with multi-speeds of RL, RM, and RH) | | Pr. 4 to Pr. 6, Pr. 24 to Pr. 27, Pr. 232 to Pr. 239 | 5-182 |
| 9 | X9 | Third function selection | | Pr. 110 to Pr. 116 | 5-415 |
| 10 | X10 | Inverter run enable signal (FR-HC2/FR-CV/FR-CC2 connection) | | Pr. 30, Pr. 70, Pr. 599 | 5-652 |
| 11 | X11 | FR-HC2/FR-CC2 connection, instantaneous power failure detection | | Pr. 30, Pr. 70 | 5-652 |
| 12 | X12 | PU operation external interlock | | Pr. 79 | 5-255 |
| 13 | X13 | External DC injection brake operation start | | Pr. 10 to Pr. 12 | 5-640 |
| 14 | X14 | PID control valid terminal | | Pr. 127 to Pr. 134, Pr. 575 to Pr. 577 | 5-504 |
| 15 | BRI | Brake opening completion signal | | Pr. 278 to Pr. 285 | 5-469 |
| 16 | X16 | PU/External operation switchover (External operation with X16-ON) | | Pr. 79, Pr. 340 | 5-255 |
| 17 | X17 | Load pattern selection forward/reverse rotation boost (For constant-torque with X17-ON) | | Pr. 14 | 5-634 |
| 18 | X18 | V/F switchover (V/F control with X18-ON) | | Pr. 80, Pr. 81, Pr. 800 | 5-55 |
| 19 | X19 | Load torque high-speed frequency | | Pr. 270 to Pr. 274 | 5-478 |
| 20 | X20 | S-pattern acceleration/deceleration C switchover | | Pr. 380 to Pr. 383 | 5-232 |
| 22 | X22 | Orientation command (for FR-A8AP) ④⑥ | | Pr. 350 to Pr. 369 | 5-487 |
| 23 | LX | Pre-excitation/servo ON ⑤ | | Pr. 850 | 5-640 |
| 24 | MRS | Output stop | | Pr. 17 | 5-413 |
| | | Electronic bypass function | | Pr. 57, Pr. 58, Pr. 135 to Pr. 139, Pr. 159 | 5-457 |
| 25 | STP (STOP) | Start self-holding selection | | Pr. 250 | 5-417 |
| 26 | MC | Control mode switchover | | Pr. 800 | 5-55 |
| 27 | TL | Torque limit selection | | Pr. 815 | 5-83 |
| 28 | X28 | Start-time tuning start external input | | Pr. 95 | 5-451 |
| 37 | X37 | Traverse function selection | | Pr. 592 to Pr. 597 | 5-482 |

***Tab. 5-163:*** *Input terminal function assignment (1)*

| Setting | Signal name | Function | Related parameter | Refer to page |
|---|---|---|---|---|
| 42 | X42 | Torque bias selection 1 (for FR-A8AP) ⑥ | Pr. 840 to Pr. 845 | 5-110 |
| 43 | X43 | Torque bias selection 2 (for FR-A8AP) ⑥ | Pr. 840 to Pr. 845 | 5-110 |
| 44 | X44 | P/PI control switchover (P control with X44-ON) | Pr. 820, Pr. 821, Pr. 830, Pr. 831 | 5-66 |
| 45 | BRI2 | Second brake sequence open completion | Pr. 641 to Pr. 649 | 5-469 |
| 46 | TRG | Trace trigger input | Pr. 1020 to Pr. 1047 | 5-568 |
| 47 | TRC | Trace sampling start/end | Pr. 1020 to Pr. 1047 | 5-568 |
| 50 | SQ | Sequence start | Pr. 414 | 5-564 |
| 60 | STF | Forward rotation command<br>(Assignable to the STF terminal (Pr. 178) only) | Pr. 250 | 5-417 |
| 61 | STR | Reverse rotation command<br>(Assignable to the STR terminal (Pr. 179) only) | Pr. 250 | 5-417 |
| 62 | RES | Inverter reset | Pr. 75 | 5-184 |
| 64 | X64 | PID forward/reverse action switchover | Pr. 127 to Pr. 134 | 5-504 |
| 65 | X65 | PU/NET operation switchover<br>(PU operation with X65-ON) | Pr. 79, Pr. 340 | 5-255 |
| 66 | X66 | External/NET operation switchover<br>(NET operation with X66-ON) | Pr. 79, Pr. 340 | 5-255 |
| 67 | X67 | Command source switchover<br>(Command by Pr. 338, Pr. 339 enabled with X67-ON) | Pr. 338, Pr. 339 | 5-266 |
| 68 | NP | Simple position pulse train sign | Pr. 291, Pr. 419 to Pr. 430, Pr. 464 | 5-168 |
| 69 | CLR | Simple position droop pulse clear | Pr. 291, Pr. 419 to Pr. 430, Pr. 464 | 5-168 |
| 70 | X70 | DC feeding operation permission ⑦ | Pr. 30, Pr. 70 | 5-652 |
| 71 | X71 | DC feeding cancel ⑦ | Pr. 30, Pr. 70 | 5-652 |
| 72 | X72 | PID integral value reset | Pr. 127 to Pr. 134,<br>Pr. 575 to Pr. 577 | 5-504 |
| 73 | X73 | Second PID P control switchover | Pr. 127 to Pr. 134,<br>Pr. 575 to Pr. 577 | 5-504 |
| 74 | X74 | Magnetic flux decay output shutoff signal | Pr. 850 | 5-644 |
| 77 | X77 | Pre-charge end command | Pr. 760 to Pr. 764 | 5-525 |
| 78 | X78 | Second pre-charge end command | Pr. 765 to Pr. 769 | 5-525 |
| 79 | X79 | Second PID forward/reverse action switchover | Pr. 753 to Pr. 758 | 5-504 |
| 80 | X80 | Second PID control valid terminal | Pr. 753 to Pr. 758 | 5-504 |
| 87 | X87 | Sudden stop | Pr. 464 to Pr. 494 | 5-129 |
| 92 | X92 | Emergency stop | Pr. 1103 | 5-225 |
| 93 | X93 | Torque limit selection | Pr. 1113 | 5-133 |
| 9999 | — | No function | — | — |

***Tab. 5-163:*** *Input terminal function assignment (2)*

① When Pr. 59 "Remote function selection" ≠ "0", functions of the RL, RM, and RH signals will be changed as in the table.

② When Pr. 270 "Stop-on contact/load torque high-speed frequency control selection" = "1, 3, 11, or 13", functions of the RL and RT signals will be changed as in the table.

③ OH signal will operate with the relay contact "open".

④ When stop position is to be input from external for orientation control, FR-A8AX (16-bit digital input) is required.

⑤ Servo ON is enabled during the position control.

⑥ Available when the plug-in option is connected. For details, refer to the Instruction Manual of the option.

⑦ The setting is available only for standard models and IP55 compatible models.

**NOTES**

Same function can be assigned to two or more terminals. In this case, the logic of terminal input is OR.

Priority of the speed command is JOG > multi-speed setting (RH, RM, RL, REX) > PID (X14).

When the (X10) signal is not set up, Pr. 79 "Operation mode selection" = "7", and PU operation external interlock (X12) signal is Inverter run enable signal.

Same signal is used to assign multi-speed (7 speed) and remote setting. Setting cannot be performed individually.

When the Load pattern selection forward/reverse rotation boost (X17) signal is not assigned, RT signal will share this function.

If Pr. 419= "2" (simple pulse train position command) is set, the terminal JOG is used for the simple position pulse train input regardless of the Pr. 291 "Pulse train I/O selection" setting.

When the terminal assignment is changed using Pr. 178 to Pr. 189 (input terminal function selection), the terminal name will be different, which may result in an error of wiring, or affect other functions. Set parameters after confirming the function of each terminal.

**Adjusting the response of input terminal (Pr. 699)**

Response of the input terminal can be delayed in a range between 5 to 50 ms. (Example of STF signal operation)

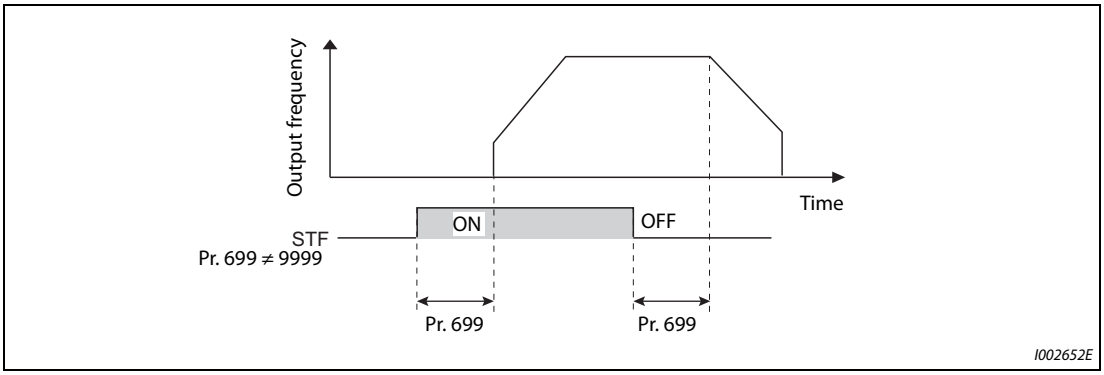


***Fig. 5-199:*** *Adjusting the response of input terminal (Pr. 699)*

**NOTE**

Setting of Pr. 699 is disabled (no filter) in the following cases:

- Input terminal is already turned ON when the power is turned ON
- Input signal used for the PLC function
- Inverter run enable signal (Xs10) signal, Simple position pulse train sign (NP) signal, Simple position droop pulse clear (CLR) signal

## 5.12.9 Inverter output shutoff signal

The inverter output can be shut off with the MRS signal. The logic of the MRS signal can also be selected.

| Pr. | Name | Initial value | Setting range | Description |
|---|---|---|---|---|
| 17<br>T720 | MRS input selection | 0 | 0 | Normally open input |
| | | | 2 | Normally closed input<br>(NC contact input specification) |
| | | | 4 | External terminal: Normally closed input<br>(NC contact input specification)<br>Communication: Normally open input |

**About output shutoff signal (MRS signal)**

- When the Output stop (MRS) signal is turned ON while operating the inverter, inverter output is instantaneously shut off.
- The response time of the MRS signal is within 2 ms.

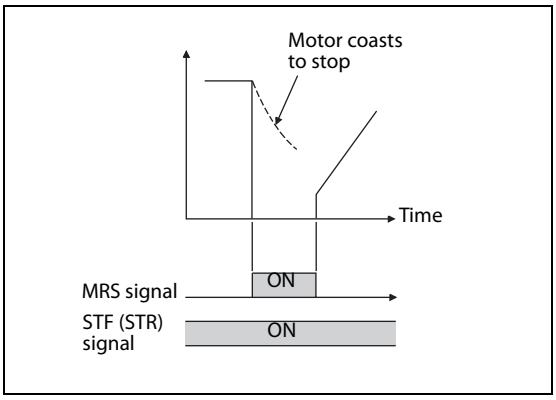


***Fig. 5-200:***
*Output shutoff signal*

- Terminal MRS may be used as described below.
  - To use a mechanical brake (e.g. electromagnetic brake) to stop the motor
    The inverter output is shut off when the mechanical brake operates.
  - To provide interlock to disable operation by the inverter
    With the MRS signal ON, the inverter cannot be operated even if the start signal is entered into the inverter.
  - To coast the motor to a stop
    When the start signal is turned OFF, the inverter decelerates the motor to a stop in the preset deceleration time, but when the MRS signal is turned ON, the motor coasts to a stop.

**MRS signal logic inversion (Pr. 17 = "2")**

When Pr.17 = "2", the MRS signal can be changed to normally closed (NC contact) specification. The inverter will shut off the output with MRS signal turned ON (opened).

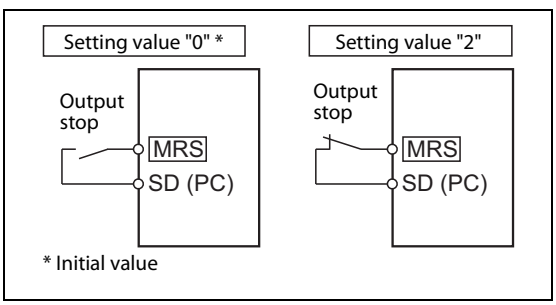


***Fig. 5-201:***
*Connection of the MRS terminal in source logic*

**Assigning a different action for each MRS signal input via communication and external terminal (Pr. 17 = "4")**

When Pr. 17 = "4", the MRS signal from an external terminal can be set as the normally closed (NC contact) input, and the MRS signal from communication as the normally open (NO contact) input. This function is useful to perform operation by communication with MRS signal from external terminal remained ON.

| External MRS | Communication MRS | Pr. 17 setting | | |
|---|---|---|---|---|
| | | 0 | 2 | 4 |
| OFF | OFF | Operation enabled | Output shutoff | Output shutoff |
| OFF | ON | Output shutoff | Output shutoff | Output shutoff |
| ON | OFF | Output shutoff | Output shutoff | Operation enabled |
| ON | ON | Output shutoff | Operation enabled | Output shutoff |

***Tab. 5-164:*** *Output shutoff by external terminal or communication*

**NOTES**

The MRS signal is assigned to the terminal MRS in the initial status. By setting "24" in either Pr. 178 to Pr. 189 (input terminal function selection), the RT signal can be assigned to the other terminal.

When using an external terminal to input the MRS signal, the MRS signal shuts off the output in any of the operation modes.

MRS signal is valid from either of communication or external, but when the MRS signals is to be used as Inverter run enable signal (X10), it is required to input from external.

When the terminal assignment is changed using Pr. 178 to Pr. 189 (input terminal function selection), the terminal name will be different, which may result in an error of wiring, or affect other functions. Set parameters after confirming the function of each terminal.

| Parameters referred to | | | |
|---|---|---|---|
| Pr. 178 to Pr. 189 | (input terminal function selection) | => | page 5-409 |

## 5.12.10 Selecting operation condition of the second function selection signal (RT) and the third function selection signal (X9)

Second (third) function can be selected by the RT (X9) signal.

Operating condition (validity condition) for second (third) function can be also set.

| Pr. | Name | Initial value | Setting range | Description |
|---|---|---|---|---|
| 155<br>T730 | RT signal function validity condition selection | 0 | 0 | Second (third) function is immediately enabled with ON of RT (X9) signal. |
| | | | 10 | Second (third) function will be enabled while RT (X9) signal is ON and running in constant speed. (Disabled while accelerating or decelerating) |

- Turning ON the Second function selection (RT) signal enables the second functions.
- Turning ON the Third function selection (X9) enables the third functions. For the X9 signal, set "9" in Pr. 178 to 189 (input terminal function selection) to assign the function.
- The following table lists application examples of the second (third) functions.
  - Switching between regular use and emergency use
  - Switching between heavy load and light load
  - Change the acceleration/deceleration time by break point acceleration/deceleration
  - Switching characteristics of main motor and sub motor

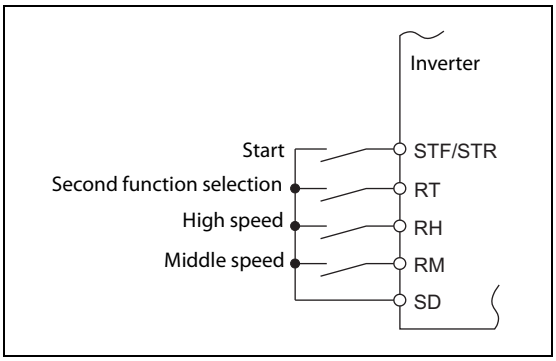


***Fig. 5-202:***
*Connection diagram for second function selection*

I002655E

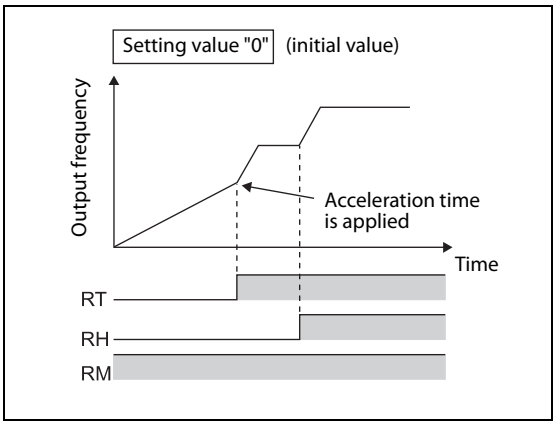


***Fig. 5-203:***
*Example of second acceleration/deceleration time*

I001146E

● When the RT (X9) signal is ON, the following second (third) functions are selected at the same time.

| Function | First function Parameter number | Second function Parameter number | Third function Parameter number | Refer to page |
|---|---|---|---|---|
| Torque boost | Pr. 0 | Pr. 46 | Pr. 112 | 5-629 |
| Base frequency | Pr. 3 | Pr. 47 | Pr. 113 | 5-631 |
| Acceleration time | Pr. 7 | Pr. 44 | Pr. 110 | 5-225 |
| Deceleration time | Pr. 8 | Pr. 44, Pr. 45 | Pr. 110, Pr. 111 | 5-225 |
| Electronic thermal O/L relay ① | Pr. 9 | Pr. 51 | ② | 5-284 |
| Free thermal ① | Pr. 600 to Pr. 604 | Pr. 692 to Pr. 696 | ② | |
| Motor permissible load level ① | Pr. 607 | Pr. 608 | ② | 5-284 |
| Stall prevention | Pr. 22 | Pr. 48, Pr. 49 | Pr. 114, Pr. 115 | 5-304 |
| Applicable motor ① | Pr. 71 | Pr. 450 | ② | 5-421 |
| Motor constant ① | Pr. 80 to Pr. 84, Pr. 89 to Pr. 94, Pr. 298, Pr. 702, Pr. 706, Pr. 707, Pr. 711, Pr. 712, Pr. 717, Pr. 721, Pr. 724, Pr. 725, Pr. 859 | Pr. 453 to Pr. 457, Pr. 560, Pr. 569, Pr. 458 to Pr. 462, Pr. 738 to Pr. 747, Pr. 860 | ② | 5-426, 5-440 |
| Offline auto tuning ① | Pr. 96 | Pr. 463 | ② | 5-426, 5-440 |
| Online auto tuning ① | Pr. 95 | Pr. 574 | ② | 5-451 |
| PID control | Pr. 127 to Pr. 134 | Pr. 753 to Pr. 758 | ② | 5-504 |
| PID Pre-charge function | Pr. 760 to Pr. 764 | Pr. 765 to Pr. 769 | ② | 5-525 |
| Brake sequence ① | Pr. 278 to Pr. 285, Pr. 639, Pr. 640 | Pr. 641 to Pr. 648, Pr. 650, Pr. 651 | ② | 5-469 |
| Low-speed range torque characteristics ① | Pr. 788 | Pr. 747 | ② | 5-74 |
| Motor control method ① | Pr. 800 | Pr. 451 | ② | 5-55 |
| Speed control gain | Pr. 820, Pr. 821 | Pr. 830, Pr. 831 | ② | 5-94 |
| Analog input filter | Pr. 822, Pr. 826 | Pr. 832, Pr. 836 | ② | 5-386 |
| Speed detection filter | Pr. 823 | Pr. 833 | ② | 5-180 |
| Torque control gain | Pr. 824, Pr. 825 | Pr. 834, Pr. 835 | ② | 5-141 |
| Torque detection filter | Pr. 827 | Pr. 837 | ② | 5-180 |

***Tab. 5-165:*** *Functions, that can be set as second or third functions*

① The function can be changed by switching the RT signal ON/OFF while the inverter is stopped. If a signal is switched during operation, the operation method changes after the inverter stops, (Pr. 450 ≠ 9999).

② When the RT signal is OFF, the first function is selected and when it is ON, the second function is selected.

**NOTES**

RT signal is assigned to the terminal RT in the initial status. Set "3" in any of Pr. 178 to Pr. 189 (input terminal function selection) to assign the RT signal to another terminal.

When both the RT signal and X9 signal are ON, the X9 signal (third function) is prioritized.

Changing the terminal assignment using Pr. 178 to Pr. 189 (input terminal function selection) may affect the other functions. Set parameters after confirming the function of each terminal.

| Parameters referred to | | | |
|---|---|---|---|
| Pr. 178 to Pr. 189 | (input terminal function selection) | => | page 5-409 |

## 5.12.11 Start signal operation selection

Operation of start signal (STF/STR) can be selected.

Select the stopping method (deceleration to stop or casting) at turn-OFF of the start signal.
Use this function to stop a motor with a mechanical brake at turn-OFF of the start signal.

| Pr. | Name | Initial value | Setting range | Description | |
|---|---|---|---|---|---|
| | | | | Start signal (STF/STR) | Stop operation (Refer to page 5-417) |
| 250 G106 | Stop selection | 9999 | 0 to 100 s | STF signal: Forward rotation start<br>STR signal: Reverse rotation start | Turn OFF the start signal and it will coast to stop after the specified time period.<br>When set to 1000 s to 1100 s, it will coast to stop after (Pr. 250 – 1000) s. |
| | | | 1000 s to 1100 s | STF signal: Start signal<br>STR signal: Forward/reverse rotation signal | |
| | | | 9999 | STF signal: Forward rotation start<br>STR signal: Reverse rotation start | It will perform deceleration stop when the start signal is turned OFF. |
| | | | 8888 | STF signal: Start signal<br>STR signal: Forward/reverse rotation signal | |

**2-wire type (STF, STR signal)**

- The following figure shows the connection in 2-wire type.
- As an initial setting, forward/reverse rotation signals (STF/STR) acts as both start and stop signals. Either one turned ON will be enabled, and the operation will follow that signal. The motor will perform a deceleration stop when both are turned OFF (or both are turned ON) during the operation.
- There are methods such as inputting 0 to 10 V DC between the speed setting input terminals 2 and 5, or Pr. 4 to Pr. 6 (multi-speed setting (fast, medium, slow)) for the frequency setting signal. (For multi-speed operation, refer to page 5-182.)
- By setting Pr. 250 = "1000 to 1100, 8888", STF signal becomes start command and STF signal becomes forward/reverse command.

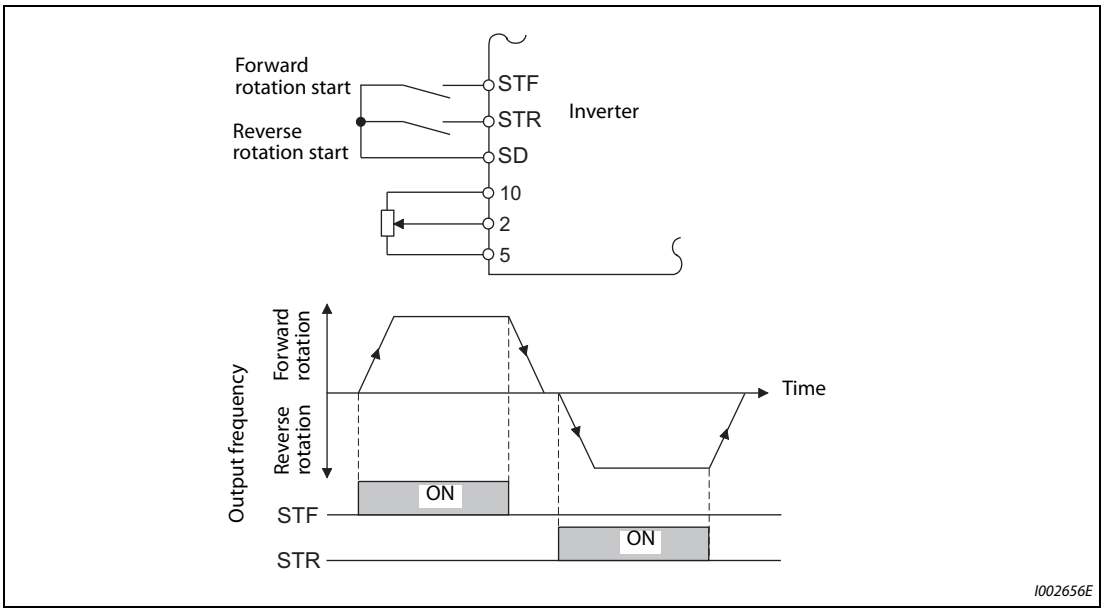


***Fig. 5-204:*** *2-wire type connection example (Pr. 250 = "9999")*

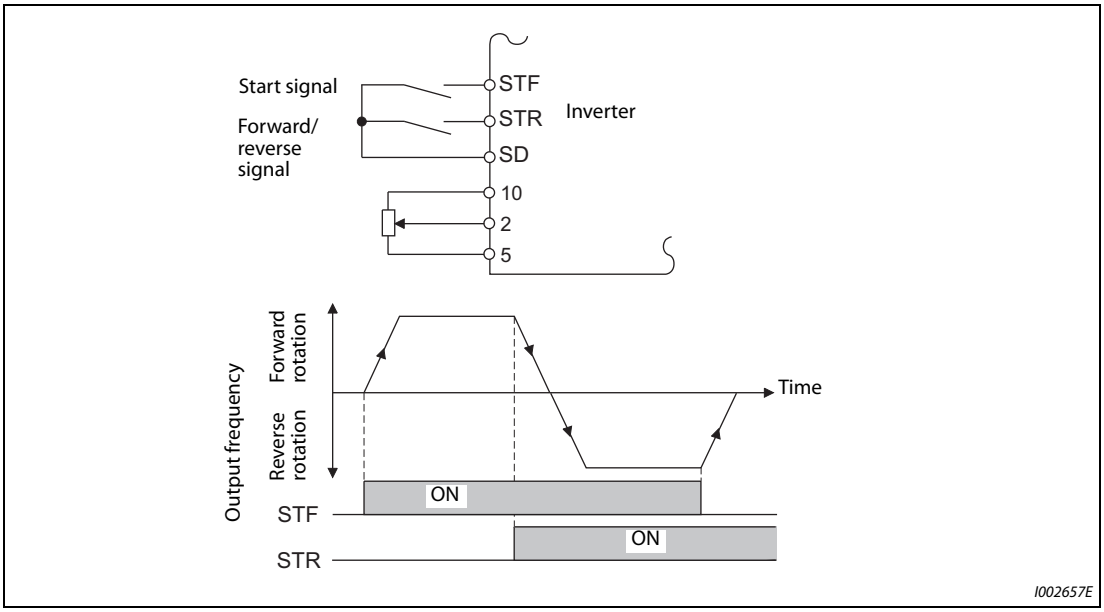


***Fig. 5-205:*** *2-wire type connection example (Pr. 250 = "8888")*

**NOTES**

By setting Pr. 250 = "0 to 100, 1000 to 1100", it will perform coast to stop when the start command is turned OFF. (Refer to page 5-417.)

The STF and STR signals are assigned to the STF and STR terminals in the initial status. STF signal can be assigned to a terminal by Pr. 178 "STF terminal function selection", and STR signal can be assigned to a terminal by Pr. 179 "STR terminal function selection".

**3-wire type (STF, STR, STP (STOP) signal)**

- The following figure shows the connection in 3-wire type.
- Start self-holding function is enabled when the STP (STOP) signal is turned ON. In such case, forward/reverse signal will only operate as start signal.
- Even if start signal (STF or STR) is turned ON and then OFF, the start signal will be maintained and it will start. To change the rotation direction, turn STR (STF) ON once and then OFF.
- Inverter will perform deceleration stop by turning the STP (STOP) signal OFF once.

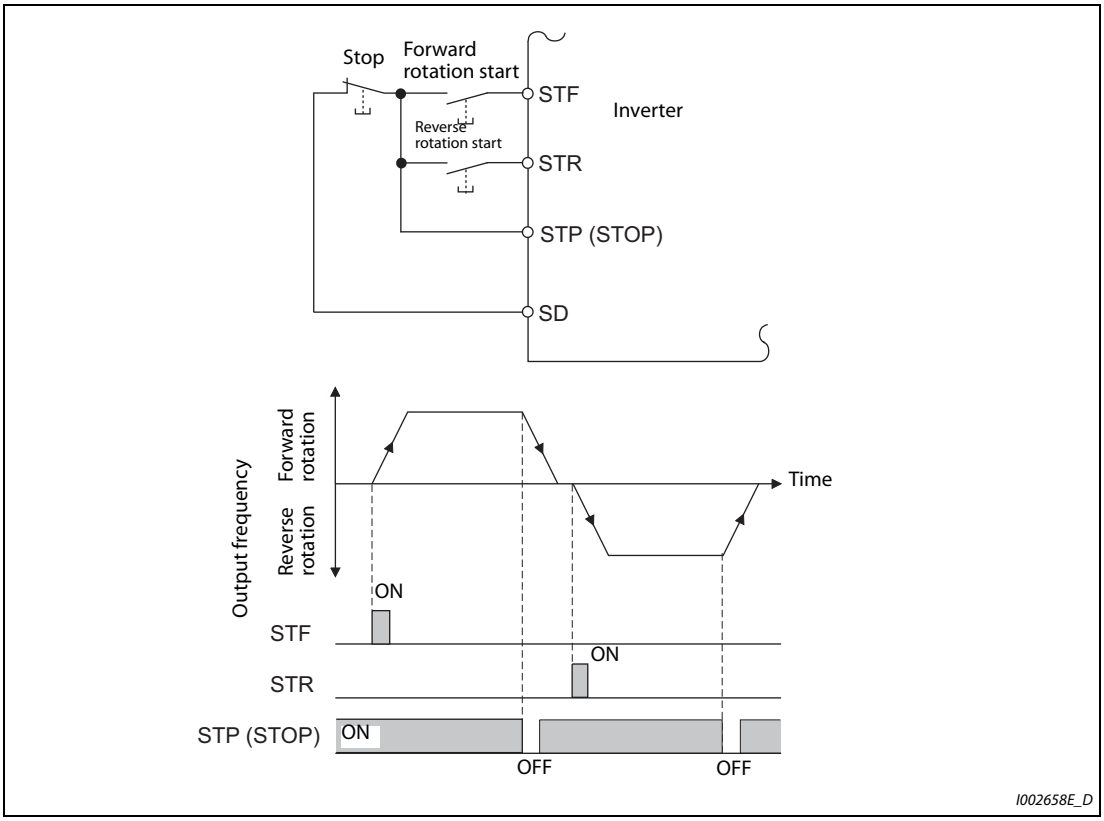


***Fig. 5-206:*** *3-wire type connection example (Pr. 250 = "9999")*

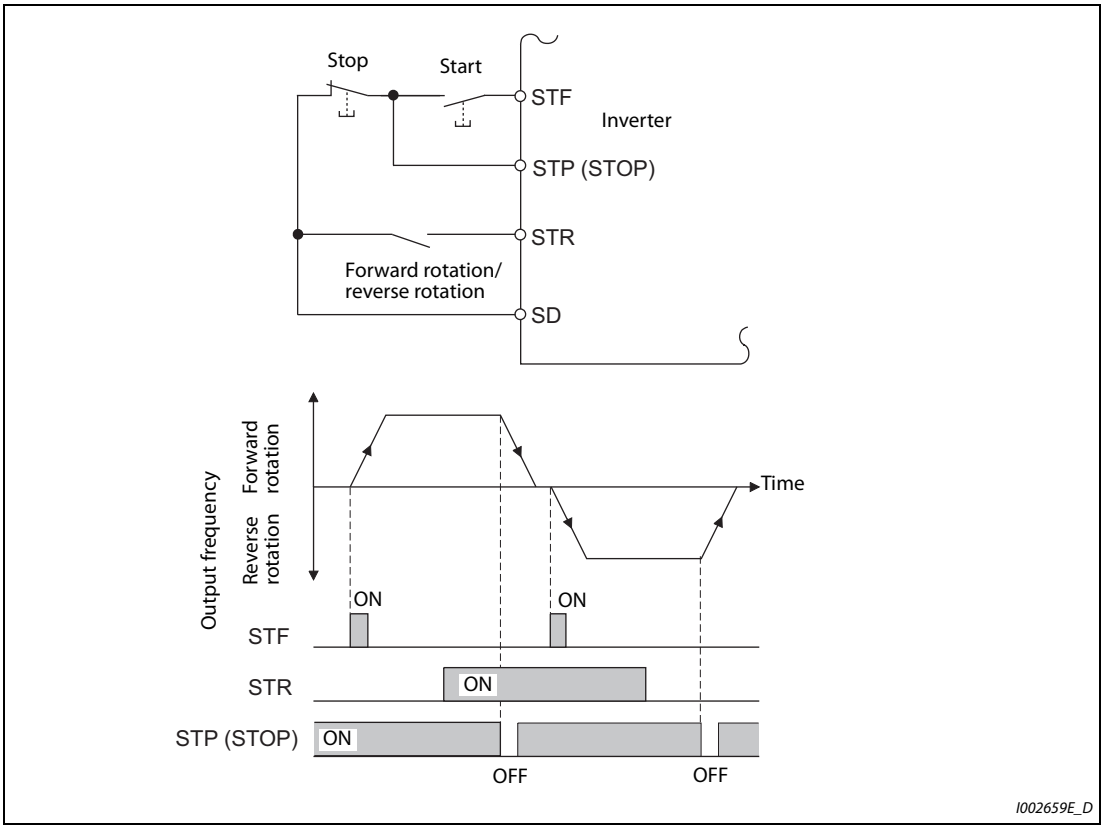


***Fig. 5-207:*** *3-wire type connection example (Pr. 250 = "8888")*

**NOTES**

The STP (STOP) signal is assigned to the STP (STOP) terminal by the initial setting. Set "25" in any of Pr. 178 to Pr. 189 to assign the STP (STOP) signal to another terminal.

When the JOG operation is enabled by turning ON the JOG signal, STP (STOP) signal will be disabled.

Even when the output is stopped by turning ON the MRS signal, self-holding function is not cancelled.

### Start signal selection

| STF | STR | Pr. 250 setting and inverter condition | |
|---|---|---|---|
| | | 0 to 100 s, 9999 | 1000 s to 1100 s, 8888 |
| OFF | OFF | Stop | Stop |
| OFF | ON | Reverse rotation | |
| ON | OFF | Forward rotation | Forward rotation |
| ON | ON | Stop | Reverse rotation |

***Tab. 5-166:*** *Start signal selection*

| Parameters referred to | | | |
|---|---|---|---|
| Pr. 4 to Pr. 6 | (multi-speed setting) | => | page 5-182 |
| Pr. 178 to Pr. 189 | (input terminal function selection) | => | page 5-409 |

# 5.13 (C) Motor constant parameters

| Purpose | Parameter to set | | | Refer to page |
|---|---|---|---|---|
| To select the motor to be used | Applicable motor | P.C100, P.C200 | Pr. 71, Pr. 450 | 5-421 |
| To run by maximizing the performance of the induction and vector motors | Offline auto tuning | P.C000, P.C100 to P.C105, P.C107, P.C108, P.C110, P.C120 to P.C126, P.C200 to P.C205, P.C207, P.C208, P.C210, P.C220 to P.C226 | Pr. 9, Pr. 51, Pr. 71, Pr. 80 to Pr. 84, Pr. 90 to Pr. 94, Pr. 96, Pr. 453 to Pr. 463, Pr. 684, Pr. 707, Pr. 724, Pr. 744, Pr. 745, Pr. 859, Pr. 860 | 5-66 |
| To run by maximizing the performance of the PM motor | PM motor offline auto tuning | P.C000, P.C100 to P.C108, P.C110, P.C120, P.C122, P.C123, P.C126, P.C130 to P.C133, P.C150, P.C182, P.C185, P.C200 to P.C208, P.C210, P.C220, P.C222, P.C223, P.C226, P.C230 to P.C233, P.C282, P.C285 | Pr. 9, Pr. 51, Pr. 71, Pr. 80, Pr. 81, Pr. 83, Pr. 84, Pr. 90, Pr. 92, Pr. 93, Pr. 96, Pr. 450, Pr. 453, Pr. 454, Pr. 456 to Pr. 458, Pr. 460, Pr. 461, Pr. 463, Pr. 684, Pr. 702, Pr. 706, Pr. 707, Pr. 711, Pr. 712, Pr. 717, Pr. 721, Pr. 724, Pr. 725, Pr. 738 to Pr. 747, Pr. 788, Pr. 859, Pr. 860, Pr. 1000 | 5-440 |
| To perform high accuracy operation without being affected by temperature and high-torque/ultra-low speed | Online auto tuning | P.C111, P.C211 | Pr. 95, Pr. 574 | 5-66 |
| To use the motor with encoder | Encoder specifications | P.C140, P.C141 | Pr. 359, Pr. 369 | 2-72 |
| To detect signal loss of encoder signals | Signal loss detection | P.C148 | Pr. 376 | 5-455 |

## 5.13.1 Applied motor (Pr. 71, Pr. 450)

By setting the applied motor type, the thermal characteristic appropriate for the motor can be selected.

When using a constant-torque or PM motor, the electronic thermal O/L relay is set according to the used motor.

If the Advanced magnetic flux vector control, Real sensorless vector control, vector control or PM sensorless vector control is selected, the motor constant necessary for control (SF-JR, SF-HR, SF-JRCA, SF-HRCA, SF-V5RU (1500 r/min series), MM-CF, etc.) is also selected at the same time.

| Pr. | Name | Initial value | Setting range | Description |
|---|---|---|---|---|
| 71<br>C100 | Applied motor | 0 | 0 to 6, 13 to 16, 20, 23, 24, 30, 33, 34, 40, 43, 44, 50, 53, 54, 70, 73, 74, 330, 333, 334, 8090, 8093, 8094, 9090, 9093, 9094 | By selecting a motor, the thermal characteristic and motor constant of each motor are set. |
| 450<br>C200 | Second applied motor | 9999 | 0, 1, 3 to 6, 13 to 16, 20, 23, 24, 30, 33, 34, 40, 43, 44, 50, 53, 54, 70, 73, 74, 330, 333, 334, 8093, 8094, 9090, 9093, 9094 | Set it when using the second motor.<br>(the same specifications as Pr. 71) |
| | | | 9999 | The function is disabled. |

### Setting the applied motor

Refer to the following list and set the parameters according to the applied motor.

| Pr. 71 | Pr. 450 | Motor | Constant value range when performing offline auto tuning (increment) | Operational characteristic of the electronic thermal O/L relay | | |
|---|---|---|---|---|---|---|
| | | | | Stand-ard | Constant-torque | PM |
| 0 (Pr. 71 initial value) | | Standard motor (such as SF-JR) | Pr. 82 (Pr. 455) and Pr. 859 (Pr. 860)<br>• 0 to 500 A, 9999 (0.01 A) ②<br>• 0 to 3600 A, 9999 (0.1 A) ③<br>Pr. 90 (Pr. 458) and Pr. 91 (Pr. 459)<br>• 0 to 50 Ω, 9999 (0.001 Ω) ②<br>• 0 to 400 mΩ, 9999 (0.01 mΩ) ③<br>Pr. 92 (Pr. 460) and Pr. 93 (Pr. 461) (Induction motor)<br>• 0 to 6000 mH, 9999 (0.1 mH) ②<br>• 0 to 400 mH, 9999 (0.01 mH) ③<br>Pr. 92 (Pr. 460) and Pr. 93 (Pr. 461) (PM motor)<br>• 0 to 500 mH, 9999 (0.01 mH) ②<br>• 0 to 50 mH, 9999 (0.001 mH) ③<br>Pr. 94 (Pr. 462)<br>• 0 to 100%, 9999(0.1%) ②<br>• 0 to 100%, 9999(0.01%) ③<br>Pr. 706 (Pr. 738)<br>• 0 to 5000 mV/(rad/s), 9999 (0.1 mV/(rad/s)) | ○ | | |
| 1 | | Constant-torque motor (SF-JRCA, etc.)<br>SF-V5RU (other than 1500 r/min series) | | | ○ | |
| 2 | — | Standard motor (such as SF-JR)<br>Adjustable 5 points V/F<br>(Refer to page 5-638.) | | ○ | | |
| 20 | | Mitsubishi standard motor (SF-JR 4P 1.5 kW or lower) | | | ○ | |
| 30 | | Vector control dedicated motor<br>SF-V5RU (1500 r/min series)<br>SF-THY | | | ○ | |
| 40 | | Mitsubishi high-efficiency motor SF-HR | | ○ | | |
| 50 | | Mitsubishi constant-torque motor SF-HRCA | | | ○ | |
| 70 | | Mitsubishi high-performance energy-saving motor SF-PR | | | ○ | |
| 330 ① | | IPM motor MM-CF | | | | ○ |
| 8090 | | IPM motor (other than MM-CF) | | | | ○ |
| 9090 | | SPM motor | | | | ○ |
| 3 (4) ④ | | Standard motor (such as SF-JR) | Pr. 82 (Pr. 455), Pr. 859 (Pr. 860), Pr. 90 (Pr. 458), Pr. 91 (Pr. 459), Pr. 92 (Pr. 460), Pr. 93 (Pr. 461), Pr. 94 (Pr. 462) and Pr. 706 (Pr. 738)<br>• Internal data value 0 to 65534, 9999 (1)<br>The display increment can be changed in Pr. 684. | ○ | | |
| 13 (14) ④ | | Constant-torque motor (SF-JRCA, etc.)<br>SF-V5RU (other than 1500 r/min series) | | | ○ | |
| 23 (24) ④ | | Mitsubishi standard motor (SF-JR 4P 1.5 kW or lower) | | | ○ | |
| 33 (34) ④ | | Vector control dedicated motor<br>SF-V5RU (1500 r/min series)<br>SF-THY | | | ○ | |
| 43 (44) ④ | | Mitsubishi high-efficiency motor SF-HR | | ○ | | |
| 53 (54) ④ | | Mitsubishi constant-torque motor SF-HRCA | | | ○ | |
| 73 (74) ④ | | Mitsubishi high-performance energy-saving motor SF-PR | | | ○ | |
| 333 (334) ① ④ | | IPM motor MM-CF | | | | ○ |
| 8093 (8094) ④ | | IPM motor (other than MM-CF) | | | | ○ |
| 9093(9094) ④ | | SPM motor | | | | ○ |

***Tab. 5-167:*** *Setting of parameter Pr. 71 and Pr. 450 (1)*

| Pr. 71 | Pr. 450 | Motor | Constant value range when performing offline auto tuning (increment) | | Operational characteristic of the electronic thermal O/L relay | | |
|---|---|---|---|---|---|---|---|
| | | | | | Stand-ard | Constant -torque | PM |
| 5 | | Standard motor | Star connection | Pr. 82 (Pr. 455) and Pr. 859 (Pr. 860)<br>• 0 to 500 A, 9999 (0.01 A) ②<br>• 0 to 3600 A, 9999 (0.1 A) ③<br>Pr. 90 (Pr. 458) and Pr. 91(Pr. 459)<br>• 0 to 50 Ω, 9999 (0.001 Ω) ②<br>• 0 to 400 mΩ, 9999 (0.01 mΩ) ②<br>Pr. 92 (Pr. 460) and Pr. 93 (Pr. 461)<br>• 0 to 50 Ω, 9999 (0.001 Ω) ②<br>• 0 to 3600 mΩ, 9999 (0.1 mΩ) ③<br>Pr. 94 (Pr. 462)<br>• 0 to 500 Ω, 9999 (0.01 Ω) ②<br>• 0 to 100 Ω, 9999 (0.01 Ω) ③ | ○ | | |
| 15 | | Constant-torque motor | | | | ○ | |
| 6 | | Standard motor | Delta connection | | ○ | | |
| 16 | | Constant-torque motor | | | | ○ | |
| — | 9999 (initial value) | No second applied motor | | | | | |

***Tab. 5-167:*** *Setting of parameter Pr. 71 and Pr. 450 (2)*

① The setting is available for FR-A820-00630(11K) or lower.

② For the FR-A820-03160(55K) or lower and FR-A840-01800(55K) or lower.

③ For the FR-A820-03800(75K) or higher and FR-A840-02160(75K) or higher.

④ The same operation is performed for both settings.

**NOTES**

Regardless of the Pr. 71 (Pr. 450) setting, offline auto tuning can be performed according to Pr. 96 (Pr. 463) "Auto tuning setting/status". (Refer to page 5-66 for offline auto tuning.)

**Using two types of motors (RT signal, Pr. 450)**

- When using two types of motors with one inverter, set Pr. 450 "Second applied motor".
- The setting value "9999" (initial value) disables second applied motor.
- If Pr. 450 ≠ 9999, the following parameters will be enabled by turning ON the Second function selection (RT) signal.

| Function | RT signal ON (second motor) | RT signal OFF (first motor) |
|---|---|---|
| Electronic thermal O/L relay | Pr. 51 | Pr. 9 |
| Applied motor | Pr. 450 | Pr. 71 |
| Control method selection | Pr. 451 | Pr. 800 |
| Motor capacity | Pr. 453 | Pr. 80 |
| Number of motor poles | Pr. 454 | Pr. 81 |
| Motor excitation current | Pr. 455 | Pr. 82 |
| Rated motor voltage | Pr. 456 | Pr. 83 |
| Rated motor frequency | Pr. 457 | Pr. 84 |
| Motor constant (R1) | Pr. 458 | Pr. 90 |
| Motor constant (R2) | Pr. 459 | Pr. 91 |
| Motor constant (L1)/d-shaft inductance (Ld) | Pr. 460 | Pr. 92 |
| Motor constant (L2)/q-shaft inductance (Lq) | Pr. 461 | Pr. 93 |
| Motor constant (X) | Pr. 462 | Pr. 94 |
| Auto tuning setting/status | Pr. 463 | Pr. 96 |
| Frequency search gain | Pr. 560 | Pr. 298 |
| Online auto tuning selection | Pr. 574 | Pr. 95 |
| Induced voltage constant (phi f) | Pr. 738 | Pr. 706 |
| Motor Ld decay ratio | Pr. 739 | Pr. 711 |
| Motor Lq decay ratio | Pr. 740 | Pr. 712 |
| Starting resistance tuning compensation | Pr. 741 | Pr. 717 |
| Starting magnetic pole position detection pulse width | Pr. 742 | Pr. 721 |
| Maximum motor frequency | Pr. 743 | Pr. 702 |
| Motor inertia (integer) | Pr. 744 | Pr. 707 |
| Motor inertia (exponent) | Pr. 745 | Pr. 724 |
| Motor protection current level | Pr. 746 | Pr. 725 |
| Torque current/Rated PM motor current | Pr. 860 | Pr. 859 |

***Tab. 5-168:*** *Validation of parameters by the RT signal*

**NOTES**

The RT signal is a second function selection signal. The RT signal also enables other second functions. (Refer to page 5-415.)

The RT signal is assigned to the terminal RT in the initial status. Set "3" in any of Pr. 178 to Pr. 189 (input terminal function selection) to assign the RT signal to another terminal.

Changing the terminal assignment using Pr. 178 to Pr. 189 (input terminal function selection) may affect the other functions. Set parameters after confirming the function of each terminal.

**Automatic change of Pr. 0 "Torque boost" and Pr. 12 "DC injection brake operation voltage"**

When initial values are set in Pr. 0 and Pr. 12, the Pr. 0 and Pr. 12 settings are automatically changed to the values in the table below by changing the Pr. 71 setting.

| Pr. | Pr. 71 setting | Value (%) automatically changed by Pr. 71 | | | | | | | | | | | | | | | |
|---|---|---|---|---|---|---|---|---|---|---|---|---|---|---|---|---|---|
| | | 200 V class FR-A820-□ | | | | | | | | | | | | | | | |
| | | 00046 (0.4K) | 00077 (0.75K) | 00105 (1.5K) | 00167 (2.2K) | 00250 (3.7K) | 00340 (5.5K) | 00490 (7.5K) | 00630 (11K) | 00770 (15K) | 00930 (18.5K) | 01250 (22K) | 01540 (30K) | 01870 (37K) | 02330 (45K) 03160 (55K) | | 03800 (75K) or higher |
| | | 400 V class FR-A840-□ | | | | | | | | | | | | | | | |
| | | 00023 (0.4K) | 00038 (0.75K) | 00052 (1.5K) | 00083 (2.2K) | 00126 (3.7K) | 00170 (5.5K) | 00250 (7.5K) | 00310 (11K) | 00380 (15K) | 00470 (18.5K) | 00620 (22K) | 00770 (30K) | 00930 (37K) | 01160 (45K) 01800 (55K) | | 02160 (75K) or higher |
| | | | | | | | | | | | | | | | SLD/LD | ND/HD | |
| 0 | Standard ① | 6 | 6 | 4 | 4 | 4 | 3 | 3 | 2 | 2 | 2 | 2 | 2 | 2 | 1.5 | 2 | 1 |
| | Constant torque ② | 6 | 6 | 4 | 4 | 4 | 2 | 2 | 2 | 2 | 2 | 2 | 2 | 2 | 1.5 | 2 | 1 |
| | SF-PR ③ | 3 | 3 | 3 | 2 | 2 | 1.5 | 1.5 | 1.5 | 1.5 | 1.5 | 1.5 | 1.5 | 1.5 | 1 | | 1 |
| 12 | Standard ① | 4 | 4 | 4 | 4 | 4 | 4 | 4 | 2 | 2 | 2 | 2 | 2 | 2 | 2 | | 1 |
| | Constant torque ② | 4 | 4 | 4 | 4 | 4 | 2 | 2 | 2 | 2 | 2 | 2 | 2 | 2 | 2 | | 1 |
| | SF-PR ③ | 4 | 4 | 2.5 | 2.5 | 2.5 | 2 | 2 | 1.5 | 1.5 | 1.5 | 1 | 1 | 1 | 1 | | 1 |

***Tab. 5-169:*** *Restart waiting time*

① When changed to Pr. 71 = "0, 2 to 8, 20, 23, 24, 40, 43, or 44" (standard motor)

② When changed to Pr. 71 = "1, 13 to 16, 50, 53, or 54" (constant-torque motor)

③ When changed to Pr. 71 = "70, 73, or 74" (SF-PR)

**NOTE**

When the Pr. 0 and Pr. 12 settings are changed from their initial values, automatic change is not performed.

**CAUTION:**

***Make sure to set this parameter correctly according to the motor used. Incorrect setting may cause the motor and inverter to overheat and burn.***

| Parameters referred to | | | |
|---|---|---|---|
| Pr. 0 | Torque boost | => | page 5-629 |
| Pr. 12 | DC injection brake operation voltage | => | page 5-640 |
| Pr. 96 | Auto tuning setting/status | => | page 5-66 |
| Pr. 100 to Pr. 109 | (Adjustable 5 points V/F) | => | page 5-638 |
| Pr. 178 to Pr. 189 | (input terminal function selection) | => | page 5-409 |
| Pr. 684 | Tuning data unit switchover | => | page 5-66 |
| Pr. 800 | Control method selection | => | page 5-55 |

## 5.13.2 Offline auto tuning Magnetic flux Sensorless Vector

The offline auto tuning enables the optimal operation of an motor.

### What is offline auto tuning?

Under Advanced magnetic flux vector control, real sensor vector control or vector control operation, measuring motor constants automatically (offline auto tuning) enables optimal operation of motors even when motor constants vary, when a motor of another company is used or when the wiring distance is long.

For the offline auto tuning for a PM motor, refer to page 5-440.

| Pr. | Name | Initial value | Setting range | Description |
|---|---|---|---|---|
| 684<br>C000 | Tuning data unit switchover | 0 | 0 | Internal data converted value |
| | | | 1 | The value is indicated with "A, Ω, mH or %". |
| 71<br>C100 | Applied motor | 0 | 0 to 6, 13 to 16, 20, 23, 24, 30, 33, 34, 40, 43, 44, 50, 53, 54, 70, 73, 74, 330, 333, 334, 8090, 8093, 8094, 9090, 9093, 9094 | By selecting a motor, the thermal characteristic and motor constant of each motor are set. |
| 80<br>C101 | Motor capacity | 9999 | 0.4 to 55 kW ② | Set the applied motor capacity. |
| | | | 0 to 3600 kW ③ | |
| | | | 9999 | V/F control |
| 81<br>C102 | Number of motor poles | 9999 | 2, 4, 6, 8, 10, 12 | Set the number of motor poles. |
| | | | 9999 | V/F control |
| 9<br>C103 | Electronic thermal O/L relay | Rated inverter current ① | 0 to 500 A ② | Set the rated motor current. |
| | | | 0 to 3600 A ③ | |
| 83<br>C104 | Rated motor voltage | 200/400 V ④ | 0 to 1000 V | Set the rated motor voltage (V). |
| 84<br>C105 | Rated motor frequency | 9999 | 10 to 400 Hz | Set the rated motor frequency (Hz). |
| | | | 9999 | Use the value set in Pr. 3 "Base frequency". |
| 707<br>C107 | Motor inertia (integer) | 9999 | 10 to 999, 9999 | Set the motor inertia.<br>9999: Uses the constant value of Mitsubishi motor (SF-JR, SF-HR, SF-JRCA, SF-HRCA, SF-V5RU (1500 r/min series) and so on). |
| 724<br>C108 | Motor inertia (exponent) | 9999 | 0 to 7, 9999 | |
| 96<br>C110 | Auto tuning setting/ status | 0 | 0 | No offline auto tuning |
| | | | 1 | Performs offline auto tuning without rotating the motor |
| | | | 11 | Performs offline auto tuning without rotating the motor (V/f control, IPM motor MM-CF)<br>(Refer to page 5-440) |
| | | | 101 | Performs offline auto tuning by rotating the motor |

| Pr. | Name | Initial value | Setting range | Description |
|---|---|---|---|---|
| 90<br>C120 | Motor constant (R1) | 9999 | 0 to 50 Ω, 9999 ② ⑤ | Tuning data<br>(The value measured by offline auto tuning is automatically set.)<br>9999: Uses the constant value of Mitsubishi motor (SF-JR, SF-HR, SF-JRCA, SF-HRCA, SF-V5RU (1500 r/min series) and so on). |
| | | | 0 to 400 mΩ, 9999 ③ ⑤ | |
| 91<br>C121 | Motor constant (R2) | 9999 | 0 to 50 Ω, 9999 ② ⑤ | |
| | | | 0 to 400 mΩ, 9999 ③ ⑤ | |
| 92<br>C122 | Motor constant (L1)/ d-shaft inductance (Ld) | 9999 | 0 to 6000 mH, 9999 ② ⑤ | |
| | | | 0 to 400 mH, 9999 ③ ⑤ | |
| 93<br>C123 | Motor constant (L2)/ q-shaft inductance (Lq) | 9999 | 0 to 6000 mH, 9999 ② ⑤ | |
| | | | 0 to 400 mH, 9999 ③ ⑤ | |
| 94<br>C124 | Motor constant (X) | 9999 | 0 to 100%, 9999 ⑤ | |
| 82<br>C125 | Motor excitation current | 9999 | 0 to 500 A, 9999 ② ⑤ | |
| | | | 0 to 3600 A, 9999 ③ ⑤ | |
| 859<br>C126 | Torque current/ Rated PM motor current | 9999 | 0 to 500 A, 9999 ② | |
| | | | 0 to 3600 A, 9999 ③ | |
| 298<br>A711 | Frequency search gain | 9999 | 0 to 32767 | The offline auto tuning automatically sets the gain required for the frequency search. |
| | | | 9999 | Uses the constant value of Mitsubishi motor (SF-JR, SF-HR, SF-JRCA, SF-HRCA and so on). |
| 450<br>C200 | Second applied motor | 9999 | 0, 1, 3 to 6, 13 to 16, 20, 23, 24, 30, 33, 34, 40, 43, 44, 50, 53, 54, 330, 333, 334, 8090, 8093, 8094, 9090, 9093, 9094 | Set this parameter when using the second motor.<br>(the same specifications as Pr. 71). |
| | | | 9999 | The function is disabled. |
| 453<br>C201 | Second motor capacity | 9999 | 0.4 to 55 kW ② | Set the capacity of the second motor. |
| | | | 0 to 3600 kW ③ | |
| | | | 9999 | V/F control |
| 454<br>C202 | Number of second motor poles | 9999 | 2, 4, 6, 8, 10, 12 | Set the number of poles of the second motor. |
| | | | 9999 | V/F control |
| 51<br>C203 | Second electronic thermal O/L relay | 9999 | 0 to 500 A ② | This function is enabled when the RT signal is ON.<br>Set the rated motor current. |
| | | | 0 to 3600 A ③ | |
| | | | 9999 | Second electronic thermal O/L relay disabled |
| 456<br>C204 | Rated second motor voltage | 200/400 V ④ | 0 to 1000 V | Set the rated voltage (V) of the second motor. |
| 457<br>C205 | Rated second motor frequency | 9999 | 10 to 400 Hz | Set the rated frequency (Hz) of the second motor. |
| | | | 9999 | Use the Pr. 84 "Rated motor frequency" setting. |
| 744<br>C207 | Second motor inertia (integer) | 9999 | 10 to 999, 9999 | Set the inertia of the second motor.<br>9999: Uses the constant value of Mitsubishi motor (SF-JR, SF-HR, SF-JRCA, SF-HRCA, SF-V5RU (1500 r/min series) and so on). |
| 745<br>C208 | Second motor inertia (exponent) | 9999 | 10 to 7, 9999 | |
| 463<br>C210 | Second motor auto tuning setting/status | 0 | 0 | No auto tuning for the second motor. |
| | | | 1 | Performs offline auto tuning without rotating the second motor |
| | | | 11 | Performs offline auto tuning without rotating the motor (V/f control, IPM motor MM-CF)<br>(Refer to page 5-440) |
| | | | 101 | Performs offline auto tuning by rotating the second motor |

| Pr. | Name | Initial value | Setting range | Description |
|---|---|---|---|---|
| 458<br>C220 | Second motor constant (R1) | 9999 | 0 to 50 Ω, 9999 ② ⑤ | Tuning data of the second motor<br>(The value measured by offline auto tuning is automatically set.)<br>9999: Uses the constant value of Mitsubishi motor (SF-JR, SF-HR, SF-JRCA, SF-HRCA and so on). |
| | | | 0 to 400 mΩ, 9999 ③ ⑤ | |
| 459<br>C221 | Second motor constant (R2) | 9999 | 0 to 50 Ω, 9999 ② ⑤ | |
| | | | 0 to 400 mΩ, 9999 ③ ⑤ | |
| 460<br>C222 | Second motor constant (L1) / d-shaft inductance (Ld) | 9999 | 0 to 6000 mH, 9999 ② ⑤ | |
| | | | 0 to 400 mH, 9999 ③ ⑤ | |
| 461<br>C223 | Second motor constant (L2) / q-shaft inductance (Lq) | 9999 | 0 to 6000 mH, 9999 ② ⑤ | |
| | | | 0 to 400 mH, 9999 ③ ⑤ | |
| 462<br>C224 | Second motor constant (X) | 9999 | 0 to 100%, 9999 ⑤ | |
| 455<br>C225 | Second motor excitation current | 9999 | 0 to 500 A, 9999 ② ⑤ | |
| | | | 0 to 3600 A, 9999 ③ ⑤ | |
| 860<br>C226 | Second motor torque current/ Rated PM motor current | 9999 | 0 to 500 A, 9999 ② ⑤ | |
| | | | 0 to 3600 A, 9999 ③ ⑤ | |
| 560<br>A712 | Second frequency search gain | 9999 | 0 to 32767 | The offline auto tuning automatically sets the gain required for the frequency search of the second motor. |
| | | | 9999 | Uses the constant value of Mitsubishi motor (SF-JR, SF-HR, SF-JRCA, SF-HRCA and so on). |

① For FR-A820-00077(0.75K) or lower and FR-A840-00038(0.75K) or lower, it is set to 85% of the inverter rated current.

② For the FR-A820-03160(55K) or lower and FR-A840-01800(55K)or lower.

③ For the FR-A820-03800(75K) or higher and FR-A840-02160(75K)or higher.

④ Differs according to the voltage class. (200 V/400 V)

⑤ The setting range and unit change according to the Pr. 71 (Pr. 450) setting.

**NOTES**

The function is enabled under Advanced magnetic flux vector control, Real sensorless vector control, and vector control.

Even if a motor other than Mitsubishi standard motors (SF-JR 0.4 kW or higher), high-efficiency motors (SF-HR 0.4 kW or higher), Mitsubishi constant-torque motors (SF-JRCA 4P, SF-HRCA 0.4 kW to 55 kW), Mitsubishi high-performance energy-serving motor (SF-PR), or vector control dedicated motors (SF-V5RU (1500 r/min series)), such as other manufacturers' induction motors, SF-JRC, SF-TH, etc., is used, or when the wiring length is long (approx. 30 m or longer), a motor can run with the optimum operation characteristics by using the offline auto tuning function.

Tuning is enabled even when a load is connected to the motor.

During offline auto tuning, the motor rotation can be locked (Pr. 96 = "1") or unlocked (Pr. 96 = "101"). The tuning is more accurate when the motor can rotate (unlocked).

Reading/writing of the motor constants tuned by offline auto tuning are enabled. The offline auto tuning data (motor constants) can be copied to another inverter with the operation panel (FR-DU08).

The offline auto tuning status can be monitored with the FR-DU08 and parameter unit (FR-PU07).

**Before performing offline auto tuning**

Check the following points before performing offline auto tuning:

- A value other than "9999" is set in Pr. 80 and Pr. 81, and Advanced magnetic flux vector control, Real sensorless vector control or vector control is selected (with Pr. 800).
- A motor is connected. (The motor should not be rotated by the force applied from outside during the tuning.)
- For the motor capacity, the rated motor current should be equal to or less than the rated inverter current. (It must be 0.4 kW or higher.) If a motor with substantially low rated current compared with the rated inverter current is used, speed and torque accuracies may deteriorate due to torque ripples, etc. Set the rated motor current to about 40% or higher of the rated inverter current.
- The target motor is other than a high-slip motor, a high-speed motor, or a special motor.
- The highest frequency is 400 Hz.
- The motor may rotate slightly even if the offline auto tuning without motor rotation (Pr. 96 "Auto tuning setting/status" = "1") is selected. (The slight motor rotation does not affect the tuning performance.) Fix the motor securely with a mechanical brake, or before tuning, make sure that it is safe even if the motor rotates. (Caution is required especially in vertical lift applications.)
- Check the following points for the offline auto tuning with motor rotation (Pr. 96 "Auto tuning setting/status" = "101").
  Torque is not sufficient during tuning.
  The motor can be rotated up to the speed close to the rated speed.
  The mechanical brake is released.
- Offline auto tuning is not performed correctly when the surge voltage suppression filter (FR-ASF-H/FR-BMF-H) are inserted between the inverter and motor. Be sure to remove them before performing tuning.
- Make sure to connect the encoder to the motor without coaxial misalignment during vector control. Set the speed ratio to 1:1.

### Setting

- To perform tuning, set the following parameters about the motor.

| First motor Pr. | Second motor Pr. | Name | Initial value | Description |
|---|---|---|---|---|
| 80 | 453 | Motor capacity | 9999 (V/F control) | Set the motor capacity (kW). |
| 81 | 454 | Number of motor poles | 9999 (V/F control) | Set the number of motor poles (2 to 12). |
| 800 | 451 | Control method selection | 20 | Set this parameter when using vector control or Real sensorless vector control. |
| 9 | 51 | Electronic thermal O/L relay | Rated inverter current | Set the rated motor current (A). |
| 83 | 456 | Rated motor voltage | 200 V/400 V ① | Set the rated motor voltage (V) printed on the motor's rating plate. ② |
| 84 | 457 | Rated motor frequency | 9999 | Set the rated motor frequency (Hz). ②<br>When the setting is "9999", the Pr. 3 "Base frequency" setting is used. |
| 71 | 450 | Applied motor | 0 (standard motor) | Set this parameter according to the motor. ③<br>Three types of motor constant setting ranges, units and tuning data can be stored according to settings. |
| 96 | 463 | Auto tuning setting/ status | 0 | Set "1" or "101".<br>1: Performs tuning without rotating the motor. (Excitation noise occurs at this point.)<br>101: Performs tuning without rotating the motor. The motor can rotate up to the speed near the rated motor frequency. |

***Tab. 5-170:*** *Set the parameters before performing tuning*

① Differs according to the voltage class. (200 V/400 V)

② For the settings for the SF-V5RU refer to page 2-73.

③ According to the Pr. 71 setting, the range of the motor constant parameter setting values and units can be changed. Set the Pr. 71 "Applied motor setting" according to the motor to be used and the motor constant setting range. (For other setting values of Pr. 71, refer to page 5-421.)

| Motor | | Pr. 71 setting | | |
|---|---|---|---|---|
| | | Motor constant parameter mH, % and A unit setting | Motor constant parameter Internal data setting | Motor constant parameter Ω, mΩ and A unit setting |
| Mitsubishi standard motor<br>Mitsubishi high-efficiency motor | SF-JR and SF-TH | 0 (initial value) | 3 (4) | — |
| | SF-JR 4P 1.5 kW or lower | 20 | 23 (24) | — |
| | SF-HR | 40 | 43 (44) | — |
| | Others | 0 (initial value) | 3 (4) | — |
| Mitsubishi constant-torque motor | SF-JRCA 4P<br>and SF-TH (constant-torque) | 1 | 13 (14) | — |
| | SF-HRCA | 50 | 53 (54) | — |
| | Other (SF-JRC, etc.) | 1 | 13 (14) | — |
| Mitsubishi high-performance energy-saving motor | SF-PR | 70 | 73(74) | — |
| Vector control dedicated motor | SF-V5RU (1500 r/min series)<br>SF-THY | 30 | 33 (34) | — |
| | SF-V5RU (other than the 1500 r/min series) | 1 | 13 (14) | — |
| Other manufacturer's standard motor | — | 0 (initial value) | 3 (4) | 5 (star connection motor)<br>6 (delta connection motor) |
| Other manufacturer's constant-torque motor | — | 1 | 13 (14) | 15 (star connection motor)<br>16 (delta connection motor) |

***Tab. 5-171:*** *Motor selection*

**NOTES**

If the SF-V5RU (other than the 1500 r/min series) is used, be sure to perform auto tuning after setting "1, 13, or 14" in Pr. 71 and setting Pr. 83 and Pr. 84.

If Pr. 11 "DC injection brake operation time" = "0" or Pr. 12 "DC injection brake operation voltage" = "0", offline auto tuning is performed considering Pr. 11 or Pr. 12 is set to the initial value.

If position control is selected (Pr. 800 = "3 or 5" (when the MC signal is OFF)), offline auto tuning is not performed.

If "star connection" or "delta connection" is incorrectly selected in Pr. 71, Advanced magnetic flux vector control, Real sensorless vector control and vector control are not performed normally.

- For tuning accuracy improvement, set the following parameters when the motor constants are known in advance.

| First motor Pr. | Second motor Pr. | Name | Mitsubishi motor (SF-JR, SF-HR, SF-JRCA, SF-HRCA, SF-V5RU) | Other motors |
|---|---|---|---|---|
| 707 | 744 | Motor inertia (integer) | 9999 (initial value) | Motor inertia ①<br>Jm = Pr. 707 × 10^(– Pr. 724) [kg/m$^2$] |
| 724 | 745 | Motor inertia (exponent) | | |

***Tab. 5-172:*** *Parameter settings to improve the tuning accuracy*

① The setting is valid only when a value other than "9999" is set in both Pr. 707 (Pr. 744) and Pr. 724 (Pr. 745).

**Performing tuning**

**NOTE**

Before performing tuning, check the monitor display of the operation panel (FR-DU08) or parameter unit (FR-PU07) if the inverter is in the state ready for tuning. (Refer to (2) below.) Turning ON the start command while tuning is unavailable starts the motor.

- In the PU operation mode, press FWD/REV key on the operation panel.
  For External operation, turn ON the start command (STF signal or STR signal). Tuning will start.

**NOTES**

Satisfy the required inverter start conditions to start offline auto tuning. For example, stop the input of MRS signal.

To force tuning to end, use the MRS or RES signal or press STOP/RESET key on the operation panel. (Turning the start signal (STF signal or STR signal) OFF also ends tuning.)

During offline auto tuning, only the following I/O signals are valid (initial value):
- Input terminals <effective signals>: STP (STOP), OH, MRS, RT, RES, STF, STR, S1 and S2
- Output terminals: RUN, OL, IPF, FM/CA, AM, A1B1C1 and SO

When the rotation speed and the output frequency are selected for terminals FM/CA and AM, the progress status of offline auto tuning is output in fifteen steps from FM/CA and AM.

Do not perform ON/OFF switching of the Second function selection (RT) signal during offline auto tuning. Auto tuning will not be performed properly.

Setting offline auto tuning (Pr. 96 "Auto tuning setting/status" = "1 or 101") will make pre-excitation invalid.

When the offline auto tuning is selected (Pr. 96 "Auto tuning setting/status" = "101"), the motor rotates. Take caution and ensure the safety.

Since the Inverter running (RUN) signal turns ON when tuning is started, pay close attention especially when a sequence which releases a mechanical brake by the RUN signal has been designed.

When executing offline auto tuning, input the run command after switching ON the main circuit power (R/L1, S/L2, T/L3) of the inverter.

While Pr. 79 "Operation mode selection" = "7", turn the PU operation external interlock (X12) signal ON to tune in the PU operation mode.

- Monitor is displayed on the operation panel (FR-DU08) and parameter unit (FR-PU07) during tuning as below.

| Pr. 96 setting value | 1 | 101 | 1 | 101 |
|---|---|---|---|---|
| | Parameter unit (FR-PU07) display | | Operation panel (FR-DU08) display | |
| (1) Setting | READ:List<br>1<br>--- STOP PU | READ:List<br>101<br>--- STOP PU | 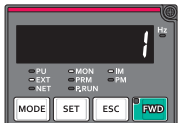 | 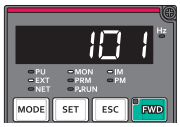 |
| (2) During tuning | TUNE 2<br>STF FWD PU | TUNE 102<br>STF FWD PU | 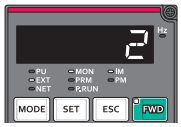 | 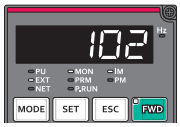 |
| (3) Normal completion | TUNE 3<br>COMPLETION<br>STF STOP PU | TUNE 103<br>COMPLETION<br>STF STOP PU | 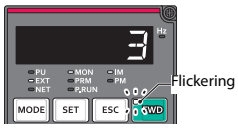  | 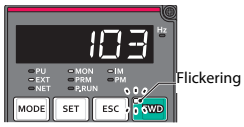  |
| (4) Forced end | TUNE 8<br>ERROR<br>--- STOP PU | | 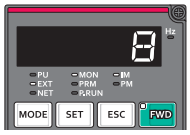 | |

***Tab. 5-173:*** *Display during tuning (monitor display)*

- Note: Offline auto tuning time (with the initial setting)

| Offline auto tuning setting | Time |
|---|---|
| No motor rotation<br>(Pr. 96 = "1") | Approx. 25 to 120 s<br>(The time depends on the inverter capacity and motor type.) |
| With motor rotation<br>(Pr. 96 = "101") | Approx. 40 s<br>(The following offline auto tuning time is set according to the acceleration/ deceleration time setting.<br>Offline auto tuning time = acceleration time + deceleration time + approx. 30 s) |

***Tab. 5-174:*** *Offline auto tuning time (when the initial value is set)*

- When offline auto tuning ends, press STOP/RESET key on the operation panel during PU operation. For External operation, turn OFF the start signal (STF signal or STR signal).
  This operation resets the offline auto tuning, and the PU's monitor display returns to the normal indication.
  (Without this operation, next operation cannot be started.)

**NOTES**

The motor constants measured once in the offline auto tuning are stored as parameters and their data are held until the offline auto tuning is performed again. However, the tuning data is cleared by performing all parameter clear.

Changing Pr. 71 (Pr. 450) after tuning completion will change the motor constant. For example, if Pr. 71 = "3" is set after tuning is performed with Pr. 71 = "0", the tuning data becomes invalid. Set Pr. 71 = "0" again for using the tuning data.

- If offline auto tuning has ended in error (see the table below), motor constants are not set. Perform an inverter reset and restart tuning.

| Error display | Error cause | Countermeasures |
|---|---|---|
| 8 | Forced end | Set Pr. 96 = "1" or "101" and try again. |
| 9 | Inverter protective function operation | Make the setting again. |
| 91 | The current limit (stall prevention) function is activated. | Set the acceleration/deceleration time longer.<br>Set Pr. 156 = "1". |
| 92 | The converter output voltage has dropped to 75% of the rated voltage. | Check for the power supply voltage fluctuation.<br>Check the Pr. 84 "Rated motor frequency" setting. |
| 93 | Calculation error<br>The motor is not connected. | Check the Pr. 83 and Pr. 84 settings.<br>Check the motor wiring and make the setting again. |
| 94 | Rotation tuning frequency setting error<br>(The frequency command for the tuning was given to exceed the maximum frequency setting, or to be in the frequency jump range.) | Check the Pr. 1 "Maximum frequency "and Pr. 31 to Pr. 36 Frequency jump settings. |

***Tab. 5-175:*** *Error display of offline auto tuning*

- When tuning is ended forcibly by pressing STOP/RESET key or turning OFF the start signal (STF or STR) during tuning, offline auto tuning does not end properly. (The motor constants have not been set.)
  Perform an inverter reset and restart tuning.
- If using a motor falling under the following conditions, set the value of Pr. 9 "Electronic thermal O/L relay" as shown below after tuning is complete.
  - If the rated power supply of the motor is 200/220 V(400/440 V) 60 Hz, set the rated motor current multiplied by 1.1 in Pr. 9.
  - If using a motor with a temperature detector such as PTC thermistor and Klixon and performs motor overheat protection, set Pr. 9 = "0" (disables the motor overheat protection feature of the inverter).

**NOTES**

An instantaneous power failure occurring during tuning will result in a tuning error. After power is restored, the inverter starts normal operation. Therefore, when STF (STR) signal is ON, the motor runs in the forward (reverse) rotation.

Any alarm occurring during tuning is handled as in the normal operation. Note that even if a retry operation has been set, retry is not performed.

The set frequency monitor displayed during the offline auto tuning is 0 Hz

**CAUTION:**

- ***Note that the motor may start running suddenly.***
- ***For the offline auto tuning in vertical lift applications, etc., caution is required to avoid falling due to insufficient torque.***

### Changing the motor constant

- If the motor constant is known, the motor constant can be set directly or set using data measured through offline auto tuning.
- According to the Pr. 71 (Pr. 450) setting, the range of the motor constant parameter setting values and units can be changed. The setting values are stored in the EEPROM as motor constant parameters, and three types of motor constants can be stored.

### Changing the motor constant (if setting the Pr. 92 and Pr. 93 motor constants in units of mH)

- Set Pr. 71 as shown below.

| Motor | | Pr. 71 setting |
|---|---|---|
| Mitsubishi standard motor<br>Mitsubishi high-efficiency motor | SF-JR | 0 (initial value) |
| | SF-JR 4P 1.5 kW or lower | 20 |
| | SF-HR | 40 |
| Mitsubishi constant-torque motor | SF-JRCA 4P | 1 |
| | SF-HRCA | 50 |
| Mitsubishi high-performance energy-saving motor | SF-PR | 70 |
| Vector control dedicated motor | SF-V5RU (1500 r/min series) | 30 |
| | SF-V5RU (other than the 1500 r/min series) | 1 |

***Tab. 5-176:*** *Motor selection*

- Use the following formula to find the Pr. 94 setting value and set a given value as the motor constant parameter.

$$\text{The setting value of Pr. 94} = \left(1 - \frac{M^2}{L1 \times L2}\right) \times 100(\%)$$

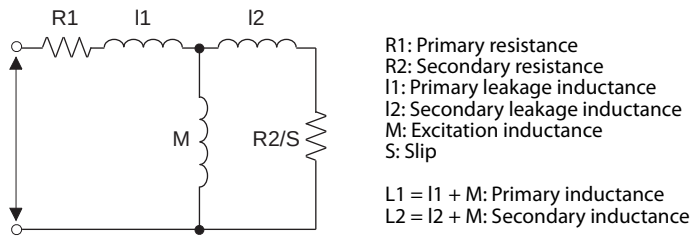


***Fig. 5-208:*** *Equivalent circuit diagram of the motor*

| First motor Pr. | Second motor Pr. | Name | Setting range | Setting increments | Initial value |
|---|---|---|---|---|---|
| 82 | 455 | Motor excitation current (No-load current) | 0 to 500 A, 9999 ① | 0.01 A ① | 9999 |
| | | | 0 to 3600 A, 9999 ② | 0.1 A ② | |
| 90 | 458 | Motor constant (R1) | 0 to 50 Ω, 9999 ① | 0.001 Ω ① | |
| | | | 0 to 400 mΩ, 9999 ② | 0.01 mΩ ② | |
| 91 | 459 | Motor constant (R2) | 0 to 50 Ω, 9999 ① | 0.001 Ω ① | |
| | | | 0 to 400 mΩ, 9999 ② | 0.01 mΩ ② | |
| 92 | 460 | Motor constant (L1)/d-shaft inductance (Ld) | 0 to 6000 mH, 9999 ① | 0.1 mH ① | |
| | | | 0 to 400 mH, 9999 ② | 0.01 mH ② | |
| 93 | 461 | Motor constant (L2)/q-shaft inductance (Lq) | 0 to 6000 mH, 9999 ① | 0.1 mH ① | |
| | | | 0 to 400 mH, 9999 ② | 0.01 mH ② | |
| 94 | 462 | Motor constant (X) | 0 to 100%, 9999 | 0.1% ① | |
| | | | | 0.01% ② | |
| 859 | 860 | Torque current/Rated PM motor current | 0 to 500 A, 9999 ① | 0.01A ① | |
| | | | 0 to 3600 A, 9999 ② | 0.1 A ② | |
| 298 | 560 | Frequency search gain | 0 to 32767, 9999 | 1 | |

***Tab. 5-177:*** *Parameter setting ranges*

① For the FR-A820-03160(55K) or lower and FR-A840-01800(55K) or lower.
② For the FR-A820-03800(75K) or higher and FR-A840-02160(75K) or higher.

**NOTE**

If "9999" is set, tuning data will be invalid and the constant values for Mitsubishi motors (SF-JR, SF-HR, SF-JRCA, SF-HRCA and SF-V5RU (1500 r/min series) and so on) are used.

**Changing the motor constant (if setting motor constants in the internal data of the inverter)**

- Set Pr. 71 as follows.

| Motor | | Pr. 71 setting |
|---|---|---|
| Mitsubishi standard motor<br>Mitsubishi high-efficiency motor | SF-JR and SF-TH | 3 (4) |
| | SF-JR 4P 1.5 kW or lower | 23 (24) |
| | SF-HR | 43 (44) |
| | Others | 3 (4) |
| Mitsubishi constant-torque motor | SF-JRCA 4P<br>SF-TH (constant-torque) | 13 (14) |
| | SF-HRCA | 53 (54) |
| | Other (SF-JRC, etc.) | 13 (14) |
| Mitsubishi high-performance energy-saving motor | SF-PR | 73 (74) |
| Vector control dedicated motor | SF-V5RU (1500 r/min series)<br>SF-THY | 33 (34) |
| | SF-V5RU (other than the 1500 r/min series) | 13 (14) |
| Other manufacturer's standard motor | — | 3 (4) |
| Other manufacturer's constant-torque motor | — | 13 (14) |

***Tab. 5-178:*** *Motor selection*

- Set a given value as the motor constant parameter. The displayed increments of the read motor constants can be changed with Pr. 684 "Tuning data unit switchover".

| First motor Pr. | Second motor Pr. | Name | Pr. 684 = 0 (initial value) | | Pr. 684 = 1 | | Initial value |
|---|---|---|---|---|---|---|---|
| | | | Setting range | Setting increments | Range indication | Unit indication | |
| 82 | 455 | Motor excitation current | 0 to ***, 9999 | 1 | 0 to 500 A, 9999 ① | 0.01 A ① | 9999 |
| | | | | | 0 to 3600 A, 9999 ② | 0.1 A ② | |
| 90 | 458 | Motor constant (R1) | | | 0 to 50 Ω, 9999 ① | 0.001 Ω ① | |
| | | | | | 0 to 400 mΩ, 9999 ② | 0.01 mΩ ② | |
| 91 | 459 | Motor constant (R2) | | | 0 to 50 Ω, 9999 ① | 0.001 Ω ① | |
| | | | | | 0 to 400 mΩ, 9999 ② | 0.01 mΩ ② | |
| 92 | 460 | Motor constant (L1)/ d-shaft inductance (Ld) | | | 0 to 6000 mH, 9999 ① | 0.1 mH ① | |
| | | | | | 0 to 400 mH, 9999 ② | 0.01 mH ② | |
| 93 | 461 | Motor constant (L2)/ q-shaft inductance (Lq) | | | 0 to 6000 mH, 9999 ① | 0.1 mH ① | |
| | | | | | 0 to 400 mH, 9999 ② | 0.01 mH ② | |
| 94 | 462 | Motor constant (X) | | | 0 to 100%, 9999 | 0.1% ① | |
| | | | | | | 0.01% ② | |
| 859 | 860 | Torque current/ Rated PM motor current | | | 0 to 500 A, 9999 ① | 0.01 A ① | |
| | | | | | 0 to 3600 A, 9999 ② | 0.1 A ② | |
| 298 | 560 | Frequency search gain | 0 to 32767, 9999 | 1 | 0 to 32767, 9999 | 1 | |

***Tab. 5-179:*** *Parameter setting ranges*

① For the FR-A820-03160(55K) lower and FR-A840-01800(55K) or lower.

② For the FR-A820-03800(75K) or higher and FR-A840-02160(75K) or higher.

**NOTES**

As the motor constants measured in the offline auto tuning have been converted into internal data (****), refer to the following setting example when making setting:

Setting example:
To slightly increase the Pr. 90 value (5%)
If Pr. 90 = "2516" is displayed, the value is calculated with 2516 × 1.05 = 2641.8.
Therefore set Pr. 90 = "2642".
(The value displayed has been converted into a value for internal use. Hence, simple addition of a given value to the displayed value has no significance.)

If "9999" is set, tuning data will be invalid and the constant values for Mitsubishi motors (SF-JR, SF-HR, SF-JRCA, SF-HRCA and SF-V5RU (1500 r/min series) and so on) are used.

**Changing the motor constant (if setting the Pr. 92 and Pr. 93 motor constants in units of [Ω])**

- Set Pr. 71 as shown below.

| Applicable motor | Pr. 71 setting | |
|---|---|---|
| | Star connection motor | Delta connection motor |
| Standard motor | 5 | 6 |
| Constant-torque motor | 15 | 16 |

- Set a given value as the motor constant parameter.

$$Iq = \sqrt{I100^2 - I0^2}$$

Iq = torque current, I100 = rated current, I0 = no load current

| First motor Pr. | Second motor Pr. | Name | Setting range | Setting increments | Initial value |
|---|---|---|---|---|---|
| 82 | 455 | Motor excitation current (No-load current) | 0 to 500 A, 9999 ① | 0.01 A ① | 9999 |
| | | | 0 to 3600 A, 9999 ② | 0.1 A ② | |
| 90 | 458 | Motor constant (r1) | 0 to 50 Ω, 9999 ① | 0.001 Ω ① | |
| | | | 0 to 400 mΩ, 9999 ② | 0.01 mΩ ② | |
| 91 | 459 | Motor constant (r2) | 0 to 50 Ω, 9999 ① | 0.001 Ω ① | |
| | | | 0 to 400 mΩ, 9999 ② | 0.01 mΩ ② | |
| 92 | 460 | Motor constant (×1) | 0 to 50 Ω, 9999 ① | 0.001 Ω ① | |
| | | | 0 to 3600 mΩ, 9999 ② | 0.01 mΩ ② | |
| 93 | 461 | Motor constant (×2) | 0 to 50 Ω, 9999 ① | 0.001 Ω ① | |
| | | | 0 to 3600 mΩ, 9999 ② | 0.01 mΩ ② | |
| 94 | 462 | Motor constant (×m) | 0 to 500 Ω, 9999 ① | 0.01 Ω | |
| | | | 0 to 100 Ω, 9999 ② | | |
| 859 | 860 | Torque current/Rated PM motor current | 0 to 500 A, 9999 ① | 0.01 A ① | |
| | | | 0 to 3600 A, 9999 ② | 0.1 A ② | |
| 298 | 560 | Frequency search gain | 0 to 32767, 9999 | 1 | |

***Tab. 5-180:*** *Parameter setting ranges*

① For the FR-A820-03160(55K) or lower and FR-A840-01800(55K) or lower.

② For the FR-A820-03800(75K) or higher and FR-A840-02160(75K) or higher.

**NOTES**

If "star connection" or "delta connection" is incorrectly selected in Pr. 71, Advanced magnetic flux vector control, Real sensorless vector control and vector control are not performed normally.

If "9999" is set, tuning data will be invalid and the constant values for Mitsubishi motors (SF-JR, SF-HR, SF-JRCA, SF-HRCA and SF-V5RU (1500 r/min series) and so on) are used.

### Tuning the second applied motor

- When one inverter switches the operation between two different motors, set the second motor in Pr. 450 "Second applied motor". (Refer to page 5-421.) In the initial setting, no second motor is applied.
- Turning ON the RT signal will enable the parameter settings for the second motor as shown below.

| Function | RT signal ON (second motor) | RT signal OFF (first motor) |
|---|---|---|
| Motor capacity | Pr. 453 | Pr. 80 |
| Number of motor poles | Pr. 454 | Pr. 81 |
| Motor excitation current | Pr. 455 | Pr. 82 |
| Rated motor voltage | Pr. 456 | Pr. 83 |
| Rated motor frequency | Pr. 457 | Pr. 84 |
| Motor constant (R1) | Pr. 458 | Pr. 90 |
| Motor constant (R2) | Pr. 459 | Pr. 91 |
| Motor constant (L1)/d-shaft inductance (Ld) | Pr. 460 | Pr. 92 |
| Motor constant (L2)/q-shaft inductance (Lq) | Pr. 461 | Pr. 93 |
| Motor constant (X) | Pr. 462 | Pr. 94 |
| Auto tuning setting/status | Pr. 463 | Pr. 96 |
| Frequency search gain | Pr. 560 | Pr. 298 |

***Tab. 5-181:*** *Validation of parameters by the RT signal*

**NOTES**

The RT signal is assigned to the terminal RT in the initial status. Set "3" in any of Pr. 178 to Pr. 189 (input terminal function selection) to assign the RT signal to another terminal.

Changing the terminal assignment using Pr. 178 to Pr. 189 (input terminal function selection) may affect the other functions. Set parameters after confirming the function of each terminal.

| Parameters referred to | | | |
|---|---|---|---|
| Pr. 1 | Maximum frequency | => | page 5-300 |
| Pr. 9 | Electronic thermal O/L relay | => | page 5-284 |
| Pr. 31 to Pr. 36 | Frequency jump | => | page 5-302 |
| Pr. 71 | Applied motor | => | page 5-421 |
| Pr. 156 | Stall prevention operation selection | => | page 5-83 |
| Pr. 178 to Pr. 189 | (input terminal function selection) | => | page 5-409 |
| Pr. 190 to Pr. 196 | (output terminal function selection) | => | page 5-350 |
| Pr. 800 | Control method selection | => | page 5-55 |

## 5.13.3 Offline auto tuning for a PM motor (motor constant tuning) PM

The offline auto tuning for an PM motor enables the optimal operation of a PM motor.

- What is offline auto tuning?

  Under PM sensorless vector control, setting motor constants automatically (offline auto tuning) enables optimal operation of motors even when motor constants vary or when the wiring distance is long. IPM and SPM motors other than IPM motor MM-CF can also be used.

For the offline auto tuning under Advanced magnetic flux vector control, Real sensorless vector control, and vector control, refer to page 5-66.

| Pr. | Name | Initial value | Setting range | Description |
|---|---|---|---|---|
| 684<br>C000 | Tuning data unit switchover | 0 | 0 | Internal data converted value |
| | | | 1 | The value is indicated with "A, Ω, mH or mV". |
| 1002<br>C150 | Lq tuning target current adjustment coefficient | 9999 | 50 to 150% | Perform adjustment if the overcurrent protective function is activated during tuning. |
| | | | 9999 | No adjustment |
| 71<br>C100 | Applied motor | 0 | 0 to 6, 13 to 16, 20, 23, 24, 30, 33, 34, 40, 43, 44, 50, 53, 54, 70, 73, 74, 330, 333, 334, 8090, 8093, 8094, 9090, 9093, 9094 | By selecting a motor, the thermal characteristic and motor constant of each motor are set. |
| 80<br>C101 | Motor capacity | 9999 | 0.4 to 55 kW ② | Applied motor capacity setting. |
| | | | 0 to 3600 kW ③ | |
| | | | 9999 | V/F control |
| 81<br>C102 | Number of motor poles | 9999 | 2, 4, 6, 8, 10, 12 | Set the number of motor poles. |
| | | | 9999 | V/F control |
| 9<br>C103 | Electronic thermal O/L relay | Rated inverter current ① | 0 to 500 A ② | Set the rated motor current. |
| | | | 0 to 3600 A ③ | |
| 83<br>C104 | Rated motor voltage | 200/400 V ④ | 0 to 1000 V | Set the rated motor voltage (V). |
| 84<br>C105 | Rated motor frequency | 9999 | 10 to 400 Hz | Set the rated motor frequency (Hz). |
| | | | 9999 | The MM-CF constant is used when the IPM motor MM-CF is selected, and the inverter internal data is used when a PM motor other than MM-CF is selected. Use the correct setting according to the motor specification. |
| 702<br>C106 | Maximum motor frequency | 9999 | 0 to 400 Hz | Set the maximum frequency of the motor. |
| | | | 9999 | The MM-CF motor maximum frequency is used when the IPM motor MM-CF is selected, and Pr. 84 setting is used when a PM motor other than MM-CF is selected. |
| 707<br>C107 | Motor inertia (integer) | 9999 | 10 to 999, 9999 | Set the motor inertia.<br>9999: Uses MM-CF inertia for IPM motor MM-CF. |
| 724<br>C108 | Motor inertia (exponent) | 9999 | 0 to 7, 9999 | |
| 96<br>C110 | Auto tuning setting/status | 0 | 0, 101 | No offline auto tuning. |
| | | | 1 | Performs offline auto tuning without rotating the motor. (motor other than IPM motor MM-CF) |
| | | | 11 | Performs offline auto tuning without rotating the motor (V/F control, IPM motor MM-CF). |

| Pr. | Name | Initial value | Setting range | Description |
|---|---|---|---|---|
| 90<br>C120 | Motor constant (R1) | 9999 | 0 to 50 Ω, 9999 ② ⑤ | Tuning data<br>(The value measured by offline auto tuning is automatically set.)<br>9999: Uses the MM-CF constant for the IPM motor MM-CF, and the inverter internal data for a PM motor other than MM-CF. |
| | | | 0 to 400 mΩ, 9999 ③ ⑤ | |
| 92<br>C122 | Motor constant (L1)/d-shaft inductance (Ld) | 9999 | 0 to 500 mH, 9999 ② ⑤ | |
| | | | 0 to 50 mH, 9999 ③ ⑤ | |
| 93<br>C123 | Motor constant (L2)/q-shaft inductance (Lq) | 9999 | 0 to 500 mH, 9999 ② ⑤ | |
| | | | 0 to 50 mH, 9999 ③ ⑤ | |
| 859<br>C126 | Torque current/Rated PM motor current | 9999 | 0 to 500 A, 9999 ② ⑤ | |
| | | | 0 to 3600 A, 9999 ③ ⑤ | |
| 706<br>C130 | Induced voltage constant (phi f) | 9999 | 0 to 5000 mV/(rad/s) ⑤ | Set this parameter according to the PM motor specifications. |
| | | | 9999 | The value calculated by the motor constant parameter setting is used. |
| 711<br>C131 | Motor Ld decay ratio | 9999 | 0 to 100%, 9999 | Tuning data<br>(The value measured by offline auto tuning is automatically set.)<br>9999: Uses the MM-CF constant for the IPM motor MM-CF, and the inverter internal data for a PM motor other than MM-CF. |
| 712<br>C132 | Motor Lq decay ratio | 9999 | 0 to 100%, 9999 | |
| 717<br>C182 | Starting resistance tuning compensation | 9999 | 0 to 200%, 9999 | |
| 721<br>C185 | Starting magnetic pole position detection pulse width | 9999 | 0 to 6000 μs,<br>10000 to 16000 μs, 9999 | |
| 725<br>C133 | Motor protection current level | 9999 | 100 to 500% | Set the maximum current (OCT) level of the motor. |
| | | | 9999 | Uses the MM-CF constant for the IPM motor MM-CF, and 200% for a PM motor other than MM-CF. |
| 450<br>C200 | Second applied motor | 9999 | 0, 1, 3 to 6, 13 to 16, 20, 23, 24, 30, 33, 34, 40, 43, 44, 50, 53, 54, 70, 73, 74, 330, 333, 334, 8090, 8093, 8094, 9090, 9093, 9094 | Set this parameter when using the second motor.<br>(the same specifications as Pr. 71). |
| | | | 9999 | The function is disabled. |
| 453<br>C201 | Second motor capacity | 9999 | 0.4 to 55 kW ② | Set the capacity of the second motor. |
| | | | 0 to 3600 kW ③ | |
| | | | 9999 | V/F control |
| 454<br>C202 | Number of second motor poles | 9999 | 2, 4, 6, 8, 10, 12 | Set the number of poles of the second motor. |
| | | | 9999 | V/F control |
| 51<br>C203 | Second electronic thermal O/L relay | 9999 | 0 to 500 A ② | Set the rated current of the second motor. |
| | | | 0 to 3600 A ③ | |
| | | | 9999 | Second electronic thermal O/L relay disabled. |
| 456<br>C204 | Rated second motor voltage | 200/400 V ④ | 0 to 1000 V | Set the rated voltage (V) of the second motor. |
| 457<br>C205 | Rated second motor frequency | 9999 | 10 to 400 Hz | Set the rated frequency (Hz) of the second motor. |
| | | | 9999 | The MM-CF constant is used when the IPM motor MM-CF is selected for the second motor, and the inverter internal data is used when a PM motor other than MM-CF is selected. Use the correct setting according to the motor specification. |
| 743<br>C206 | Second motor maximum frequency | 9999 | 0 to 400 Hz | Set the maximum frequency of the second motor. |
| | | | 9999 | The maximum frequency of an MM-CF motor when MM-CF is selected.<br>The setting value of Pr. 457 is used for non-MM-CF motors. |

| Pr. | Name | Initial value | Setting range | Description |
|---|---|---|---|---|
| 744<br>C207 | Second motor inertia (integer) | 9999 | 10 to 999, 9999 | Set the inertia of the second motor.<br>9999: Uses MM-CF inertia for IPM motor MM-CF, and MM-EFS inertia for non-MM-CF motors. |
| 745<br>C208 | Second motor inertia (exponent) | 9999 | 0 to 7, 9999 | |
| 463<br>C210 | Second motor auto tuning setting/status | 0 | 0, 101 | No auto tuning for the second motor. |
| | | | 1 | Performs offline auto tuning without rotating the second motor. (motor other than the IPM motor MM-CF) |
| | | | 11 | Performs offline auto tuning without rotating the motor (for IPM motor MM-CF). |
| 458<br>C220 | Second motor constant (R1) | 9999 | 0 to 50 Ω, 9999 ② ⑤ | Tuning data of the second motor<br>(The value measured by offline auto tuning is automatically set.)<br>9999: Uses the MM-CF constant for the IPM motor MM-CF, and the inverter internal data for a PM motor other than MM-CF. |
| | | | 0 to 400 mΩ, 9999 ③ ⑤ | |
| 460<br>C222 | Second motor constant (L1) / d-shaft inductance (Ld) | 9999 | 0 to 500 mH, 9999 ② ⑤ | |
| | | | 0 to 50 mH, 9999 ③ ⑤ | |
| 461<br>C223 | Second motor constant (L2) / q-shaft inductance (Lq) | 9999 | 0 to 500 mH, 9999 ② ⑤ | |
| | | | 0 to 50 mH, 9999 ③ ⑤ | |
| 860<br>C226 | Second motor torque current/ Rated PM motor current | 9999 | 0 to 500 A, 9999 ② ⑤ | |
| | | | 0 to 3600 A, 9999 ③ ⑤ | |
| 738<br>C230 | Second motor induced voltage constant (phi f) | 9999 | 0 to 5000 mV/(rad/s) ⑤ | Set this parameter according to the PM motor specifications. |
| | | | 9999 | Value calculated based on the tuning data. |
| 739<br>C231 | Second motor Ld decay ratio | 9999 | 0 to 100%, 9999 | Tuning data of the second motor.<br>(The value measured by offline auto<br>9999: Uses the MM-CF constant for the IPM motor MM-CF, and the inverter internal data for a PM motor other than MM-CF. |
| 740<br>C232 | Second motor Lq decay ratio | 9999 | 0 to 100%, 9999 | |
| 741<br>C282 | Second starting resistance tuning compensation | 9999 | 0 to 200%, 9999 | |
| 742<br>C285 | Second motor magnetic pole detection pulse width | 9999 | 0 to 6000 μs,<br>10000 to 16000 μs, 9999 | |
| 746<br>C233 | Second motor protection current level | 9999 | 100 to 500% | Set the maximum current (OCT) level of the second motor. |
| | | | 9999 | Uses the MM-CF constant for the IPM motor MM-CF, and 200% for a PM motor other than MM-CF. |

① For FR-A820-00077(0.75K) or lower and FR-A840-00038(0.75K) or lower, it is set to 85% of the inverter rated current.

② For the FR-A820-03160(55K) or lower and FR-A840-01800(55K) or lower.

③ For the FR-A820-03800(75K) or higher and FR-A840-02160(75K) or higher.

④ Differs according to the voltage class. (200 V/400 V)

⑤ The setting range and unit change according to the Pr. 71 (Pr. 450) setting.

**NOTES**

The settings are valid under the PM sensorless vector control.

The offline auto tuning enables the operation with SPM motors and IPM motors other than MM-CF. (When a PM motor other than the IPM motor MM-CF is used, always perform the offline auto tuning.)

Tuning is enabled even when a load is connected to the motor.

Reading/writing of the motor constants tuned by offline auto tuning are enabled. The offline auto tuning data (motor constants) can be copied to another inverter with the operation panel (FR-PU08).

The offline auto tuning status can be monitored with the FR-DU08 and parameter unit (FR-PU07).

**Before performing offline auto tuning**

Check the following points before performing offline auto tuning.

- The PM sensorless vector control is selected.
- A motor is connected. Note that the motor should be at a stop at a tuning start. (The motor should not be rotated by the force applied from outside during the tuning.)
- For the motor capacity, the rated motor current should be equal to or less than the rated inverter current. (It must be 0.4 kW or higher.) If a motor with substantially low rated current compared with the rated inverter current is used, speed and torque accuracies may deteriorate due to torque ripples, etc. Set the rated motor current to about 40% or higher of the rated inverter current.
- The maximum frequency under PM sensorless vector control is 400 Hz.
- The motor may rotate slightly even if the offline auto tuning without motor rotation (Pr. 96 "Auto tuning setting/status" = "1 or 11") is selected. (It does not affect the tuning performance.) Fix the motor securely with a mechanical brake, or before tuning, make sure that it is safe even if the motor rotates. (Caution is required especially in vertical lift applications.)
- Offline auto tuning is not performed correctly when the surge voltage suppression filter (FR-ASF-H/FR-BMF-H) are inserted between the inverter and motor. Be sure to remove them before performing tuning.
- Tuning is not available during position control under PM sensorless vector control.

### Setting

● To perform tuning, set the following parameters about the motor.

| First motor Pr. | Second motor Pr. | Name | Setting for a PM motor other than MM-CF | Setting for MM-CF |
|---|---|---|---|---|
| 80 | 453 | Motor capacity | Motor capacity (kW) | Set by the IPM parameter initialization (Refer to page 5-70.) |
| 81 | 454 | Number of motor poles | The number of motor poles (2 to 12) | |
| 9 | 51 | Electronic thermal O/L relay | Rated motor current (A) | |
| 84 | 457 | Rated motor frequency | Rated motor frequency (Hz) | |
| 83 | 456 | Rated motor voltage | Rated motor voltage (V) | Rated motor voltage (V) written on the rated plate |
| 71 | 450 | Applied motor | 8090, 8093 (IPM motor)<br>9090, 9093 (SPM motor) ① | 330 and 333 ① |
| 96 | 463 | Auto tuning setting/status | 1 | 11 |

***Tab. 5-182:*** *Set the parameters before performing tuning*

① Set Pr. 71 "Applied motor" according to the motor to be used. According to the Pr. 71 setting, the range of the motor constant parameter setting values and units can be changed. (For other setting values of Pr. 71, refer to page 5-421.)

| Motor | | Pr. 71 setting | |
|---|---|---|---|
| | | Motor constant parameter Ω, mH and A unit setting | Motor constant parameter Internal data setting |
| IPM motor | MM-CF | 330 | 333 (334) |
| | Other than MM-CF | 8090 | 8093 (8094) |
| SPM motor | | 9090 | 9093 (9094) |

***Tab. 5-183:*** *Motor selection*

**NOTES**

If PM sensorless vector control is performed, tuning cannot be performed even when Pr. 96 = "101" is set. If MM-CF is set to the applied motor, tuning cannot be performed even when Pr. 96 = "1, 101" is set.

● For the tuning accuracy improvement, set the following parameter when the motor constant is known in advance.

| First motor Pr. | Second motor Pr. | Name | Setting for a PM motor other than MM-CF | Setting for MM-CF |
|---|---|---|---|---|
| 702 | 743 | Maximum motor frequency | The maximum motor frequency [Hz] | 9999 (initial value) |
| 707 | 744 | Motor inertia (integer) | Motor inertia ①<br>Jm = Pr. 707 × 10^(– Pr. 724) [kg/m$^2$] | 9999 (initial value) |
| 724 | 745 | Motor inertia (exponent) | | |
| 725 | 746 | Motor protection current level | Maximum current level of the motor [%] | 9999 (initial value) |

***Tab. 5-184:*** *Parameter settings to improve the tuning accuracy*

① The setting is valid only when both of the Pr. 707 (Pr. 744) and Pr. 724 (Pr. 745) settings are other than "9999".

**Performing tuning**

**NOTE**

Before performing tuning, check the monitor display of the operation panel (FR-DU08) or parameter unit (FR-PU07) if the inverter is in the state ready for tuning. Turning ON the start command while tuning is unavailable starts the motor.

- In the PU operation mode, press FWD/REV key on the operation panel.
  For External operation, turn ON the start command (STF signal or STR signal). Tuning will start.

**NOTES**

Satisfy the required inverter start conditions to start offline auto tuning. For example, stop the input of MRS signal.

To force tuning to end, use the MRS or RES signal or press STOP/RESET key on the operation panel. (Turning the start signal (STF signal or STR signal) OFF also ends tuning.)

During offline auto tuning, only the following I/O signals are valid (initial value):
- Input terminals <effective signals>: STP (STOP), OH, MRS, RT, RES, STF, STR, S1 and S2
- Output terminals: RUN, OL, IPF, FM/CA, AM, A1B1C1 and SO

When the rotation speed and the output frequency are selected for terminals FM/CA and AM, the progress status of offline auto tuning is output in fifteen steps from FM/CA and AM.

Do not perform ON/OFF switching of the Second function selection (RT) signal during offline auto tuning. Auto tuning will not be performed properly.

Setting offline auto tuning (Pr. 96 = "1 or 11") will make pre-excitation invalid.

A motor with 14 or more poles cannot be tuned.

Since the Inverter running (RUN) signal turns ON when tuning is started, pay close attention especially when a sequence which releases a mechanical brake by the RUN signal has been designed.

When executing offline auto tuning, input the run command after switching ON the main circuit power (R/L1, S/L2, T/L3) of the inverter.

While Pr. 79 "Operation mode selection" = "7", turn the PU operation external interlock (X12) signal ON to tune in the PU operation mode.

- Monitor is displayed on the operation panel (FR-DU08) and parameter unit (FR-PU07) during tuning as below.

| Pr. 96 (Pr. 463) Setting | 1 | 11 | 1 | 11 |
|---|---|---|---|---|
| | Parameter unit (FR-PU07) display | | Operation panel (FR-DU08) display | |
| (1) Setting | READ:List<br>1<br>- - - STOP PU | READ:List<br>11<br>- - - STOP PU | 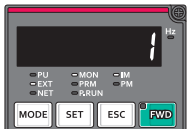 | 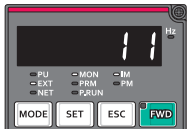 |
| (2) During tuning | TUNE 2<br>STF FWD PU | TUNE 12<br>STF FWD PU | 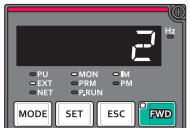 | 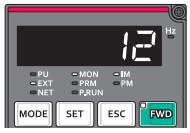 |
| (3) Normal completion | TUNE 3<br>COMPLETION<br>STF STOP PU | TUNE 13<br>COMPETION<br>STF STOP PU | 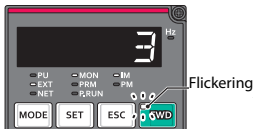  | 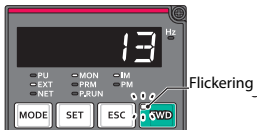  |
| (4) Forced end | TUNE<br>ERROR 8<br>- - - STOP PU | | 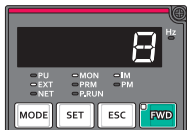 | |

***Tab. 5-185:*** *Display during tuning (monitor display)*

- When offline auto tuning ends, press STOP/RESET key on the operation panel during PU operation. For External operation, turn OFF the start signal (STF signal or STR signal).

  This operation resets the offline auto tuning, and the PU's monitor display returns to the normal indication.

  (Without this operation, next operation cannot be started.)

**NOTES**

The motor constants measured once in the offline auto tuning are stored as parameters and their data are held until the offline auto tuning is performed again. However, the tuning data is cleared by performing all parameter clear.

Changing Pr. 71 after tuning completion will change the motor constant. For example, if Pr. 71 = "8093" is set after tuning is performed with Pr. 71 ="8090", the tuning data becomes invalid. Set Pr. 71 = "8090" again for using the tuning data.

- If offline auto tuning has ended in error (see the table below), motor constants are not set. Perform an inverter reset and restart tuning.

| Error display | Error cause | Countermeasures |
|---|---|---|
| 8 | Forced end | Set Pr. 96 (Pr. 463) = "1" or "11" and try again. |
| 9 | Inverter protective function operation | Make the setting again. |
| 92 | The converter output voltage has dropped to 75% of the rated voltage. | Check for the power supply voltage fluctuation.<br>Check the Pr. 84 "Rated motor frequency" setting. |
| 93 | Calculation error.<br>The motor is not connected. | Check the motor wiring and make the setting again. |
| 94 | Rotation tuning frequency setting error<br>(The frequency command for the tuning was given to exceed the maximum frequency setting, or to be in the frequency jump range.) | Check the Pr. 1" Maximum frequency" and Pr. 31 to Pr. 36 Frequency jump settings. |

***Tab. 5-186:*** *Settings for Pr. 96 (Pr. 463)*

- When tuning is ended forcibly by pressing STOP/RESET key or turning OFF the start signal (STF or STR) during tuning, offline auto tuning does not end properly. (The motor constants have not been set.)
  Perform an inverter reset and restart tuning.

**NOTES**

An instantaneous power failure occurring during tuning will result in a tuning error.
After power is restored, the inverter starts normal operation. Therefore, when STF (STR) signal is ON, the motor runs in the forward (reverse) rotation.

Any alarm occurring during tuning is handled as in the normal operation. However, if the retry function is set, no retry is performed even when a protective function that performs a retry is activated.

The set frequency monitor displayed during the offline auto tuning is 0 Hz.

**CAUTION:**
***Note that the motor may start running suddenly.***

**Parameters in which tuning results are set after tuning**

| First motor Pr. | Second motor Pr. | Name | Other than MM-CF Pr. 96 (Pr.4 63) = 1 | V/F control or MM-CF Pr. 96 (Pr. 463) = 11 | Description |
|---|---|---|---|---|---|
| 90 | 458 | Motor constant (R1) | ○ | ○ | Resistance per phase |
| 92 | 460 | Motor constant (L1)/d-shaft inductance (Ld) | ○ | — | d-shaft inductance |
| 93 | 461 | Motor constant (L2)/q-shaft inductance (Lq) | ○ | — | q-shaft inductance |
| 711 | 739 | Motor Ld decay ratio | ○ | — | d-shaft inductance decay ratio |
| 712 | 740 | Motor Lq decay ratio | ○ | — | q-shaft inductance decay ratio |
| 717 | 741 | Starting resistance tuning compensation | ○ | ○ | |
| 721 | 742 | Starting magnetic pole position detection pulse width | ○ | — | When the setting value is 10000 or more: With polarity inversion for compensation, voltage pulse (Pr. setting minus 10000) µs |
| 859 | 860 | Torque current/Rated PM motor current | ○ | — | |
| 96 | 463 | Auto tuning setting/status | ○ | ○ | |

***Tab. 5-187:*** *Setting of motor constants after tuning*

**Tuning adjustment (Pr. 1002)**

The overcurrent protective function may be activated during Lq tuning for an easily magnetically saturated motor (motor with a large Lg decay ratio). In such case, adjust the target flowing current used for tuning with Pr. 1002 "Lq tuning target current adjustment coefficient".

**Changing the motor constant**

- If the motor constant is known, the motor constant can be set directly or set using data measured through offline auto tuning.
- According to the Pr. 71 (Pr. 450) setting, the range of the motor constant parameter setting values and units can be changed. The setting values are stored in the EEPROM as motor constant parameters, and two types of motor constants can be stored.

**Changing the motor constant (if setting motor constants in units of [Ω], [mH] or [A])**

● Set Pr. 71 as shown below.

| Motor | | Pr. 71 setting |
|---|---|---|
| IPM motor | MM-CF | 330 |
| | Other than MM-CF | 8090 |
| SPM motor | | 9090 |

***Tab. 5-188:*** *Motor selection*

● Set a given value as the motor constant parameter.

| First Pr. | Second Pr. | Name | Setting range | Setting increments | Initial value |
|---|---|---|---|---|---|
| 90 | 458 | Motor constant (R1) | 0 to 50 Ω, 9999 ① | 0.001 Ω ① | 9999 |
| | | | 0 to 400 mΩ, 9999 ② | 0.01 mΩ ② | |
| 92 | 460 | Motor constant (L1)/d-shaft inductance (Ld) | 0 to 500 mH, 9999 ① | 0.01 mH ① | |
| | | | 0 to 50 mH, 9999 ② | 0.001 mH ② | |
| 93 | 461 | Motor constant (L2)/q-shaft inductance (Lq) | 0 to 500 mH, 9999 ①s | 0.01 mH ① | |
| | | | 0 to 50 mH, 9999 ② | 0.001 mH ② | |
| 706 | 738 | Induced voltage constant (phi f) | 0 to 5000 mV/(rad/s), 9999 | 0.1 mV/(rad/s) | |
| 859 | 860 | Torque current/Rated PM motor current | 0 to 500 A, 9999 ① | 0.01 A ① | |
| | | | 0 to 3600 A, 9999 ② | 0.1 A ② | |

***Tab. 5-189:*** *Parameter setting ranges*

① For the FR-A820-03160(55K) or lower and FR-A840-01800(55K)or lower.

② For the FR-A820-03800(75K) or higher and FR-A840-02160(75K)or higher.

**NOTE**

Setting "9999" disables the tuning data. The MM-CF constant is used for the IPM motor MM-CF, and the inverter internal constant is used for a PM motor other than MM-CF.

**Changing the motor constant (if setting motor constants in the internal data of the inverter)**

● Set Pr. 71 as follows.

| Motor | | Pr. 71 setting |
|---|---|---|
| IPM motor | MM-CF | 333 (334) |
| | Other than MM-CF | 8093 (8094) |
| SPM motor | | 9093 (9094) |

***Tab. 5-190:*** *Motor selection*

- Set a given value as the motor constant parameter. The displayed increments of the read motor constants can be changed with Pr. 684 "Tuning data unit switchover".

| First motor Pr. | Second motor Pr. | Name | Pr. 684 = 0 (initial value) | | Pr. 684 = 1 | | Initial value |
|---|---|---|---|---|---|---|---|
| | | | Setting range | Setting increments | Range indication | Unit indication | |
| 90 | 458 | Motor constant (R1) | 0 to ***, 9999 | 1 | 0 to 50 Ω, 9999 ① | 0.001 Ω ① | 9999 |
| | | | | | 0 to 400 mΩ, 9999 ② | 0.01 mΩ ② | |
| 92 | 460 | Motor constant (L1)/ d-shaft inductance (Ld) | | | 0 to 500 mH, 9999 ① | 0.01 mH ① | |
| | | | | | 0 to 50 mH, 9999 ② | 0.001 mH ② | |
| 93 | 461 | Motor constant (L2)/ q-shaft inductance (Lq) | | | 0 to 500 mH, 9999 ① | 0.01 mH ① | |
| | | | | | 0 to 50 mH, 9999 ② | 0.001 mH ② | |
| 706 | 738 | Induced voltage constant (phi f) | | | 0 to 5000 mV/s/rad, 9999 | 0.1 mV/ (rad/s) | |
| 859 | 860 | Torque current/ Rated PM motor current | | | 0 to 500 A, 9999 ① | 0.01 A ① | |
| | | | | | 0 to 3600 A, 9999 ② | 0.1 A ② | |

***Tab. 5-191:*** *Parameter setting ranges*

① For the FR-A820-03160(55K) or lower and FR-A840-01800(55K) or lower.

② For the FR-A820-03800(75K) or higher and FR-A840-02160(75K) or higher.

**NOTES**

As the motor constants measured in the offline auto tuning have been converted into internal data (****), refer to the following setting example when making setting:
Setting example:
To slightly increase Pr. 90 value (5%)
If Pr. 90 = "2516" is displayed
The value can be calculated with "2516 × 1.05 = 2641.8". Therefore set Pr. 90 = "2642".
(The value displayed has been converted into a value for internal use. Hence, simple addition of a given value to the displayed value has no significance)

Setting "9999" disables the tuning data. The MM-CF constant is used for the IPM motor MM-CF, and the inverter internal constant is used for a PM motor other than MM-CF.

| Parameters referred to | | | |
|---|---|---|---|
| Pr. 9 | Electronic thermal O/L relay | => | page 5-284 |
| Pr. 71 | Applied motor | => | page 5-421 |
| Pr. 178 to Pr. 189 | (input terminal function selection) | => | page 5-409 |
| Pr. 800 | Control method selection | => | page 5-55 |

## 5.13.4 Online auto tuning Magnetic flux Sensorless Vector

If online auto tuning is selected under Advanced magnetic flux vector control, Real sensorless vector control or vector control, favorable torque accuracy is retained by adjusting temperature even when the resistance value varies due to increase in the motor temperature.

| Pr. | Name | Initial value | Setting range | Description |
|---|---|---|---|---|
| 95<br>C111 | Online auto tuning selection | 0 | 0 | Do not perform online auto tuning |
| | | | 1 | Perform online auto tuning at startup |
| | | | 2 | Magnetic flux observer (tuning always) |
| 574<br>C211 | Second motor online auto tuning | 0 | 0 and 1 | Select online auto tuning for the second motor. (same as Pr. 95) |

**Performing online auto tuning at startup (setting value "1")**

- By promptly tuning the motor status at startup, accurate operation without being affected by motor temperature is achieved. Also high torque can be provided at very low speed and stable operation is possible.
- When using Advanced magnetic flux vector control (Pr. 80 "Motor capacity," Pr. 81 "Number of motor poles" or Real sensorless vector control (Pr. 80, Pr. 81, Pr. 800 "Control method selection"), select the online auto tuning at start.
- Make sure to perform offline auto tuning before performing online auto tuning.
- Operation method

① Perform offline auto tuning. (Refer to page 5-66.)

② Check that Pr. 96 "Auto tuning setting/status" = "3 or 103 (offline auto tuning completion)".

③ Set Pr. 95 "Online auto tuning selection" = "1 (online auto tuning at start)".

④ Check that the following parameters are set before starting operation.

| Pr. | Description |
|---|---|
| 9 | Uses both rated motor current and electronic thermal O/L relay. |
| 71 | Applicable motor |
| 80 | Motor capacity (with the rated motor current equal to or lower than the rated inverter current) ① |
| 81 | Number of motor poles |

***Tab. 5-192:*** *Related Parameters*

① If a motor with substantially low rated current compared with the rated inverter current is used, speed and torque accuracies may deteriorate due to torque ripples, etc. Set the rated motor current to about 40% or higher of the rated inverter current.

⑤ In the PU operation mode, press FWD/REV key on the operation panel.
For External operation, turn ON the start command (STF signal or STR signal).

**NOTES**

When performing the online auto tuning at start for a lift, consider utilization of a brake sequence function for the brake opening timing at a start or tuning using the external terminal. The tuning is completed in approximately 500 ms at the maximum after the start. Not enough torque may be provided during that period. Caution is required to prevent the object from dropping. Use of the start-time tuning start (X28) signal is recommended to perform tuning. (Refer to page 5-452.)

Perform online auto tuning at startup when the motor is stopped.

The online auto tuning is disabled when the MRS signal is being input, the setting speed is Pr. 13 "Starting frequency" or lower (V/F control, Advanced magnetic flux vector control), an inverter fault is occurring, or the inverter's startup condition is not satisfied.

Online auto tuning does not operate during deceleration and restart from DC injection brake operation.

It is disabled during JOG operation.

If automatic restart after instantaneous power failure is selected, automatic restart is prioritized. (Online auto tuning at startup does not run during frequency search.)
If automatic restart after instantaneous power failure is used together, perform online auto tuning while stopping operation with the X28 signal. (Refer to page 5-452.)

Zero current detection and output current detection are enabled during online auto tuning.

No RUN signal is output during online auto tuning. The RUN signal is turned ON at operation startup.

If the time between the inverter stop and restart is within 4 s, tuning is performed at startup but its result will not not applied.

**Online auto tuning at startup using the external terminal (setting value "1", X28 signal and Y39 signal)**

- Before turning ON the start signal (STF or STR), online auto tuning can be performed by turning ON the Start-time tuning start external input (X28) signal in a stopped status. Such operation will minimize the startup delay by turning at start.
- Perform offline auto tuning and set Pr. 95 = "1" (tuning at start).
- When Start time tuning completion (Y39) is OFF, tuning at start can be performed with X28 signal.
- Up to 500 ms can be taken to complete tuning at startup.
- To use the X28 signal, set "28" in any of Pr. 178 to Pr. 189 (Input terminal function selection) to assign the function to an input terminal.

- To use the Y39 signal, set "39 (positive logic) or 139 (negative logic)" in any of Pr. 190 to Pr. 196 (output terminal function selection) to assign function to an output terminal.

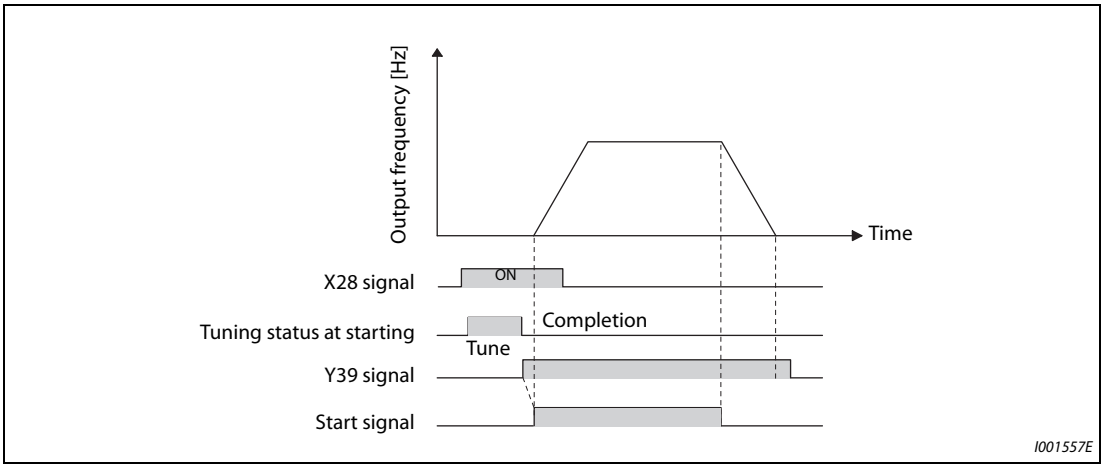


***Fig. 5-209:*** *Start of online auto tuning using an external signal*

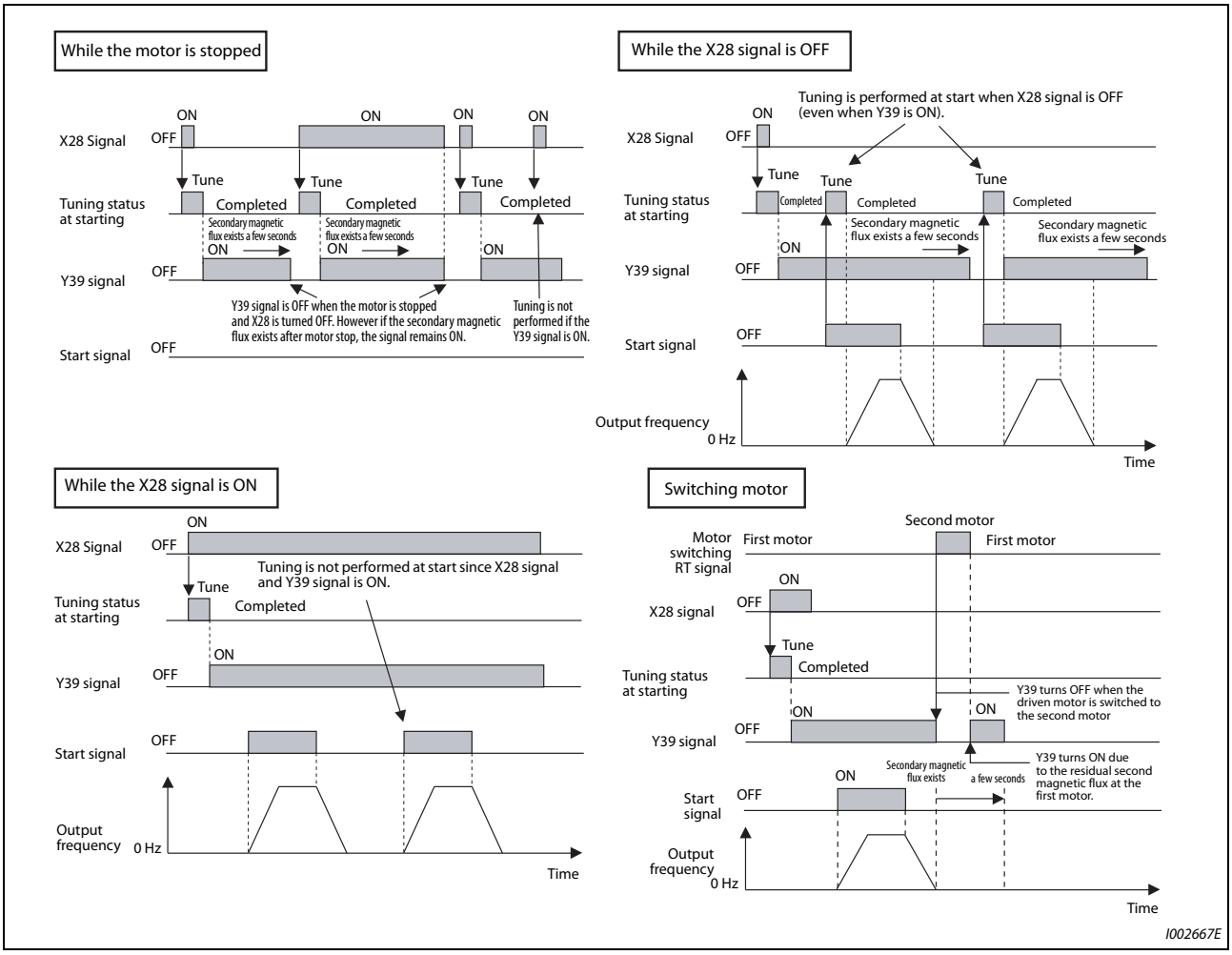


***Fig. 5-210:*** *Timing chart of online auto tuning*

**NOTES**

Even if the start signal is turned ON during zero speed control or servo lock, tuning is performed at startup.

The Y39 signal remains ON as long as there is second flux even after the motor is stopped.

The X28 signal is disabled while the Y39 signal is ON.

The STF and STR signals are enabled after completing tuning at start.

The Inverter running (RUN) signal is not turned ON during online auto tuning. The RUN signal is turned ON after starting up.

It is disabled during V/F control or PM sensorless vector control.

Changing the terminal assignment using Pr. 178 to Pr. 189 (input terminal function selection) and Pr. 190 to Pr. 196 (output terminal function selection) may affect other functions. Set parameters after confirming the function of each terminal.

**Magnetic flux observer (tuning always) (setting value "2")**

- If vector control is performed using a motor with an encoder, this setting improves torque accuracy.
  Estimate or measure the flux within the motor using the current running through the motor and the inverter output voltage.
  Because the flux of a motor can always be accurately estimated (even during operation), fine characteristics can always be attained without being affected by temperature change in the second resistance.
- When vector control (Pr. 80, Pr. 81 or Pr. 800) is used, select the magnetic flux observer. (Refer to page 5-55.)

**NOTE**

Offline auto tuning is not necessary if selecting magnetic flux observer for SF-V5RU, SF-JR (with encoder), SF-HR (with encoder), SF-JRCA (with encoder) or SF-HRCA (with encoder). (However, when the wiring length is long (30 m or longer as a reference), perform offline auto tuning so that the resistance arises in the long wiring can be reflected to the operation.)

**Tuning the second applied motor (Pr. 574)**

When switching two different motors by one inverter, set the second motor in Pr. 450 "Second applied motor". (In the initial setting, no second motor is applied. (Refer to page 5-421.))
Pr. 574 is enabled when the Second function selection (RT) signal is turned ON.

| Pr. | Description |
|---|---|
| 450 | Applicable motor |
| 453 | Motor capacity (with the rated motor current equal to or lower than the rated inverter current) ① |
| 454 | Number of motor poles |

***Tab. 5-193:*** *Related Parameters*

① If a motor with substantially low rated current compared with the rated inverter current is used, speed and torque accuracies may deteriorate due to torque ripples, etc. Set the rated motor current to about 40% or higher of the rated inverter current.

**NOTES**

The RT signal is a second function selection signal. The RT signal also enables other second functions. (Refer to page 5-409.)
The RT signal is assigned to the terminal RT in the initial status. Set "3" in any of Pr. 178 to Pr. 189 (input terminal function selection) to assign the RT signal to another terminal.

Changing the terminal assignment using Pr. 178 to Pr. 189 (input terminal function selection) may affect the other functions. Set parameters after confirming the function of each terminal.

| Parameters referred to | | | |
|---|---|---|---|
| Pr. 9 | Electronic thermal O/L relay | => | page 5-284 |
| Pr. 71 | Applied motor | => | page 5-421 |
| Pr. 80 | Motor capacity | => | page 5-55, page 5-66, page 5-440 |
| Pr. 81 | Number of motor poles | => | page 5-55, page 5-66, page 5-440 |
| Pr. 96 | Auto tuning setting/status | => | page 5-66, page 5-440 |
| Pr. 178 to Pr. 189 | (input terminal function selection) | => | page 5-409 |
| Pr. 190 to Pr. 196 | (output terminal function selection) | => | page 5-350 |
| Pr. 800 | Control method selection | => | page 5-55 |

## 5.13.5 Signal loss detection of encoder signals V/F Magnetic flux Vector

If encoder signals are disconnected during encoder feedback control, orientation control or vector control, Signal loss detection (E.ECT) is turned ON to shut off the inverter output.

| Pr. | Name | Initial value | Setting range | Description |
|---|---|---|---|---|
| 376<br>C148 | Encoder signal loss detection enable/disable selection | 0 | 0 | Signal loss detection disabled |
| | | | 1 | Signal loss detection enabled |

The setting is available only when the FR-A8AP (option) is mounted.

# 5.14 (A) Application parameters

| Purpose | Parameter to set | | | Refer to page |
|---|---|---|---|---|
| To operate by switching between the inverter and the commercial power supply operation | Electronic bypass function | P.A000 to P.A005 | Pr. 135 to Pr. 139, Pr. 159 | 5-457 |
| To reduce the standby power | Self power management | P.A002, P.A006, P.A007, P.E300 | Pr. 30, Pr. 137, Pr. 248, Pr. 254 | 5-469 |
| To stop the motor with a mechanical brake (operation timing of mechanical brake) | Brake sequence function | P.A100 to P.A106, P.F500, P.A108, P.A109, P.A120 to P.A130 | Pr. 278 to Pr. 285, Pr. 292, Pr. 639 to Pr. 651 | 5-469 |
| To stop the motor with a mechanical brake (vibration control at stop-on-contact) | Stop-on-contact control | P.A200, P.A205, P.A206 | Pr. 270, Pr. 275, Pr. 276 | 5-474 |
| To increase the speed at light load | Load torque high-speed frequency control | P.D301, P.D302 P.A200 to P.A204 | Pr. 4, Pr. 5, Pr. 270 to Pr. 274 | 5-478 |
| To strengthen or weaken the frequency at a constant cycle | Traverse operation | P.A300 to P.A305 | Pr. 592 to Pr. 597 | 5-482 |
| To suppress the swinging of an object moved by a crane by crane control | Swinging suppression control | P.A310 to P.A317 | Pr. 592 to Pr. 597 | 5-484 |
| To adjust the stop position (orientation control) of the rotating shaft | Orientation control | P.A510 to P.A512, P.A520, P.A524, P.A525, P.A526 to P.A533, P.A542 to P.A545, P.C140, P.C141 | Pr. 350 to Pr. 366, Pr. 369, Pr. 393, Pr. 396 to Pr. 399 | 5-487 |
| To perform process control, such as for the pump flow volume and air volume | PID control | P.A600 to P.A606, P.A610 to P.A615, P.A621 to P.A625, P.A640 to P.A644, P.A650 to P.A655, P.A661 to P.A665 | Pr. 127 to Pr. 134, Pr. 553, Pr. 554, Pr. 575 to Pr. 577, Pr. 609, Pr. 610, Pr. 753 to Pr. 758, Pr. 1134, Pr. 1135, Pr. 1140, Pr. 1141, Pr. 1143 to Pr. 1149 | 5-504 |
| | PID pre-charge function | P.A616 to P.A620, P.A656 to P.A660 | Pr. 760 to Pr. 769 | 5-525 |
| | PID display adjustment | P.A630 to P.A633, P.A670 to P.A673 | C42 to C45 (Pr. 934, Pr. 935), Pr. 1136 to Pr. 1139 | 5-521 |
| To control the dance roll for winding/unwinding | Dancer control | P.A601, P.A602, P.A605, P.A606, P.A610, P.A611, P.A613, P.A615, P.A624, P.A625, P.F020, P.F021 | Pr. 44, Pr. 45, Pr. 128, Pr. 134, Pr. 609, Pr. 610, Pr. 1134, Pr. 1135 | 5-530 |
| To continue operating at analog current input loss | 4 mA input check | P.A680 to P.A682 | Pr. 573, Pr. 777, Pr. 778 | 5-386 |
| To restart without stopping the motor at instantaneous power failure | Automatic restart after instantaneous power failure / flying start function for induction motors | P.A700 to P.A705, P.A710, P.F003 | Pr. 57, Pr. 58, Pr. 162 to Pr. 165, Pr. 299, Pr. 611 | 5-540 |
| | Frequency search accuracy improvement (V/F control, offline auto tuning) | P.A700, P.A711, P.A712, P.C110, P.C210 | Pr. 96, Pr. 162, Pr. 298, Pr. 463, Pr. 560 | 5-440 |
| | Automatic restart after instantaneous power failure / flying start function for IPM motors | P.A700, P.A702, P.F003, P.F004 | Pr. 57, Pr. 162, Pr. 611 | 5-549 |
| To decelerate the motor to a stop at instantaneous power failure | Power failure time deceleration-to-stop function | P.A730 to P.A735, P.A785 | Pr. 261 to Pr. 266, Pr. 294 | 5-558 |
| To operate with sequence program | PLC function | P.A800 to P.A804, P.A811 to P.A860 | Pr. 414 to Pr. 417, Pr. 498, Pr. 1150 to Pr. 1199 | 5-564 |
| To store the inverter running status to a USB memory device | Trace function | P.A900 to P.A906, P.A910 to P.A920, P.A930 to P.A939 | Pr. 1020 to Pr. 1047 | 5-568 |

## 5.14.1 Electronic bypass function V/F Magnetic flux Sensorless Vector

The inverter contains complicated sequence circuits for switching between the commercial power supply operation and inverter operation. Therefore, interlock operation of the magnetic contactor for switching can be easily performed by simply inputting start, stop, and automatic switching selection signals.

| Pr. | Name | Initial value | Setting range | Description |
|---|---|---|---|---|
| 57<br>A702 | Restart coasting time | 9999 | 0 | Coasting time differs according to the inverter capacity. ① |
| | | | 0.1 to 30 s | Set the waiting time for the inverter to perform a restart at power restoration after an instantaneous power failure. |
| | | | 9999 | No restart |
| 58<br>A703 | Restart cushion time | 1 s | 0 to 60 s | Set the voltage cushion time for restart. |
| 135<br>A000 | Electronic bypass sequence selection | 0 | 0 | Without electronic bypass sequence |
| | | | 1 | With electronic bypass sequence |
| 136<br>A001 | MC switchover interlock time | 1 s | 0 to 100 s | Set the operation interlock time for MC2 and MC3. |
| 137<br>A002 | Start waiting time | 0.5 s | 0 to 100 s | Set a time period that is a little longer than the time period from the ON signal input to the actual pick-up operation of MC3 (0.3 to 0.5 s). |
| 138<br>A003 | Bypass selection at a fault | 0 | 0 | Inverter output stop (motor coasting) at inverter failure |
| | | | 1 | Automatic switchover to commercial power supply operation at inverter failure. (Switchover is not possible when an external thermal relay (E.OHT) or CPU fault (E.CPU) is occurring.) |
| 139<br>A004 | Automatic switchover frequency from inverter to bypass operation | 9999 | 0 to 60 Hz | Set the frequency where the inverter operation is switched to commercial power supply operation. The inverter operation is performed from a start to Pr. 139 setting, then it switches automatically to the commercial power supply operation when the output frequency is equal to or above Pr. 139. |
| | | | 9999 | Without automatic switchover |
| 159<br>A005 | Automatic switchover frequency range from bypass to inverter operation | 9999 | 0 to 10 Hz | Set the frequency where the commercial power supply operation, which has been switched from the inverter operation with Pr. 139, switches back to inverter operation. When the frequency command becomes less than (Pr. 139 – Pr. 159), the motor switches automatically to inverter operation and operates at the frequency of the frequency command. Turning OFF the inverter start command (STF/STR) also switches the operation to the inverter operation. |
| | | | 9999 | To switch the commercial power supply operation, which has been switched from the inverter operation with Pr. 139, to the inverter operation again, the inverter start command (STF/STR) is turned OFF. The operation switches to the inverter operation, and the motor decelerates to a stop. |

① The coasting time when Pr. 57 = "0" is as shown below. (When Pr. 162 "Automatic restart after instantaneous power failure selection" is set to the initial value.)

FR-A820-00105(1.5K) or lower and FR-A840-00052(1.5K) or lower: . . . . . .0.5 s
FR-A820-00167(2.2K) to FR-A820-00490(7.5K) and
FR-A840-00083(2.2K) to FR-A840-00250(7.5K): . . . . . .1 s
FR-A820-00630(11K) to FR-A820-03160(55K) and
FR-A840-00310(11K) to FR-A840-01800(55K): . . . . . .3.0 s
FR-A820-03800(75K) or higher and FR-A840-02160(75K) or higher: . . . . . .5.0 s

### Electronic bypass sequence function

- When operating the motor at 60 Hz (or 50 Hz), the motor can be more efficiently operated with a commercial power supply. In addition, if the motor cannot be stopped for a long period of time even for an inverter maintenance and inspection, it is recommended that a commercial power supply circuit be installed.
- When switching between inverter operation and commercial power supply operation, commercial power supply may be accidentally applied to the output side of the inverter. To avoid such situation, provide an interlock where the magnetic contactor at the commercial power supply side turns ON at turn OFF of the magnetic contactor at the inverter output side.
  The inverter's electronic bypass sequence that outputs timing signals for the magnetic contactors can act as a complicated interlock between the commercial power supply operation and the inverter operation.

**NOTE**

The commercial power supply operation is not available with Mitsubishi vector control dedicated motors (SF-V5RU).

### Connection diagram

- A typical connection diagram of the electronic bypass sequence is shown below.
  - Sink logic, Pr. 185 = "7", Pr. 192 = "17", Pr. 193 = "18", and Pr. 193 = "19"

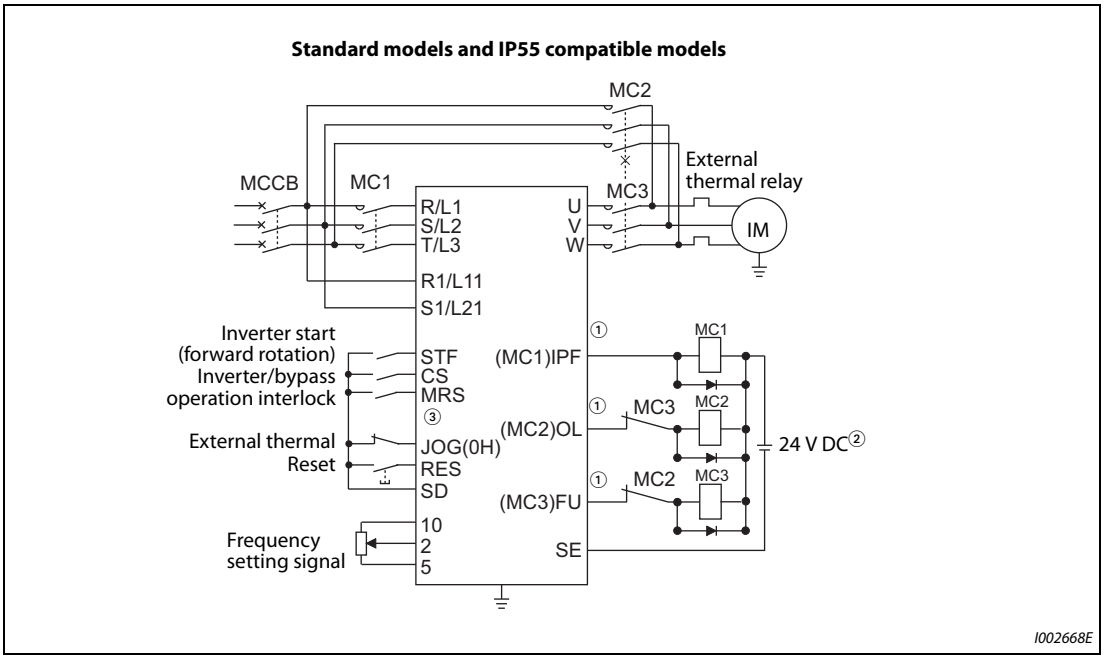


***Fig. 5-211:*** *Electronic bypass sequence connection diagram (Standard/IP55 compatible models)*

– Sink logic, Pr. 182 = "24", Pr. 185 = "7", Pr. 192 = "17", Pr. 193 = "18", and Pr. 193 = "19"

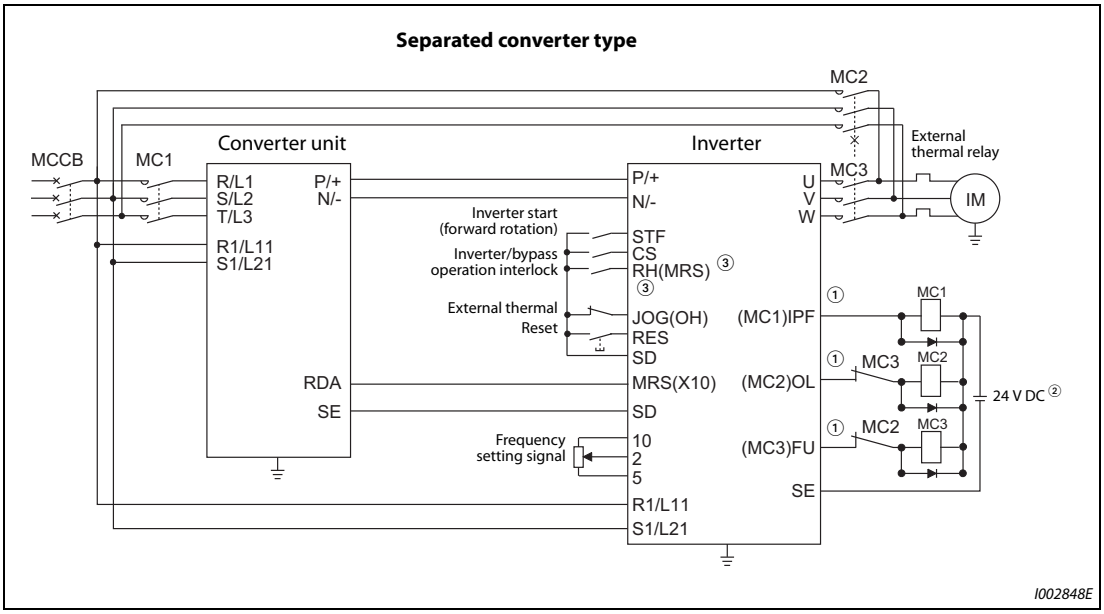


***Fig. 5-212:*** *Electronic bypass sequence connection diagram (Separated converter type)*

① Be careful of the capacity of the sequence output terminals.
The applied terminals differ by the settings of Pr. 190 to Pr. 196 (output terminal function selection).

| Output terminal capacity | Output terminal permissible load |
|---|---|
| Open collector output of inverter (RUN, SU, IPF, OL, FU) | 24 V DC 0.1 A |
| Inverter relay output (A1-C1, B1-C1, A2-B2, B2-C2)<br>Relay output option (FR-A8AR) | 230 V AC 0.3 A<br>30 V DC 0.3 A |

② When connecting a DC power supply, insert a protective diode.
When connecting an AC power supply, use the relay output option (FR-A8AR) and use contact outputs.

③ The applied terminals differ by the settings of Pr. 180 to Pr. 189 (input terminal function selection).

**NOTES**

Use the electronic bypass function in External operation mode. In addition, the wiring terminals R1/L11 and S1/L21 must be connected to a separate power source that does go through MC1. Be sure to connect using a separate power supply.

**Be sure to provide a mechanical interlock for MC2 and MC3.**

● Operation of magnetic contactor (MC1, MC2, MC3)

| Magnetic contactor | Installation location | Operation | | |
|---|---|---|---|---|
| | | During commercial power supply operation | During inverter operation | During inverter fault |
| MC1 | Between power supply and inverter input side | Shorted | Shorted | Open (short by reset) |
| MC2 | Between power supply and motor | Shorted | Open | Open (Selected by Pr. 138. Always open when the external thermal relay is operating.) |
| MC3 | Between inverter output side and motor | Open | Shorted | Open |

***Tab. 5-194:*** *Operations of magnetic contactors*

● The input signals are as shown below.

| Signal | Applied terminal | Function | Operation | MC operation ⑦ | | |
|---|---|---|---|---|---|---|
| | | | | MC1 ⑥ | MC2 | MC3 |
| MRS | MRS ① | Selects whether or not operation is available. ② | ON..... Electronic bypass operation available | ○ | — | — |
| | | | OFF ..... Electronic bypass operation not available | ○ | × | Invariance |
| CS | CS | Inverter/commercial power supply operation switchover ③ | ON..... Inverter operation | ○ | × | ○ |
| | | | OFF ..... Commercial power supply operation | ○ | ○ | × |
| STF (STR) | STF (STR) | Inverter operation command (Disabled during commercial power supply operation) ④ | ON..... Forward rotation (reverse rotation) | ○ | × | ○ |
| | | | OFF ..... Stop | ○ | × | ○ |
| OH | Set one of Pr. 180 to Pr. 189 to "7". | External thermal relay input | ON..... Motor normal | ○ | — | — |
| | | | OFF ..... Motor fault | × | × | × |
| RES | RES | Operation status reset ⑤ | ON..... Reset | Invariance | × | Invariance |
| | | | OFF ..... Normal operation | ○ | — | — |

***Tab. 5-195:*** *Input signals*

① For separated converter types, the X10 signal is assigned to the terminal MRS in the initial setting. For the MRS signal, set "24" to any of Pr. 180 to Pr. 189 (input terminal function selection) to assign the function to another terminal.

② When the MRS signal is OFF, neither the commercial power supply operation nor the inverter operation can be performed.

③ The CS signal operates only when the MRS signal is ON.

④ STF(STR) operates only when the MRS and CS signals are both ON.

⑤ The RES signal can be used for reset input acceptance with Pr. 75 "Reset selection/disconnected PU detection/PU stop selection".

⑥ MC1 turns OFF at an inverter fault.

⑦ MC operation

○: MC-ON
×: MC-OFF
—: During inverter operation, MC2-OFF, MC3-ON
During commercial power supply operation, MC2-ON, MC3-OFF
Invariance: The status before changing the signal ON or OFF is held.

- The output signals are as shown below.

| Signal | Applied terminal (Pr. 190 to Pr. 196 setting) | Description |
|---|---|---|
| MC1 | 17 | Operation output signal of the magnetic contactor MC1 on the inverter's input side. |
| MC2 | 18 | Operation output signal of the magnetic contactor MC2 for the commercial power supply operation. |
| MC3 | 19 | Operation output signal of the magnetic contactor MC3 on the inverter's output side. |

***Tab. 5-196:*** *Output signals*

### Electronic bypass operation sequence

- Example of operation sequence without automatic bypass sequence (Pr. 139 = "9999")

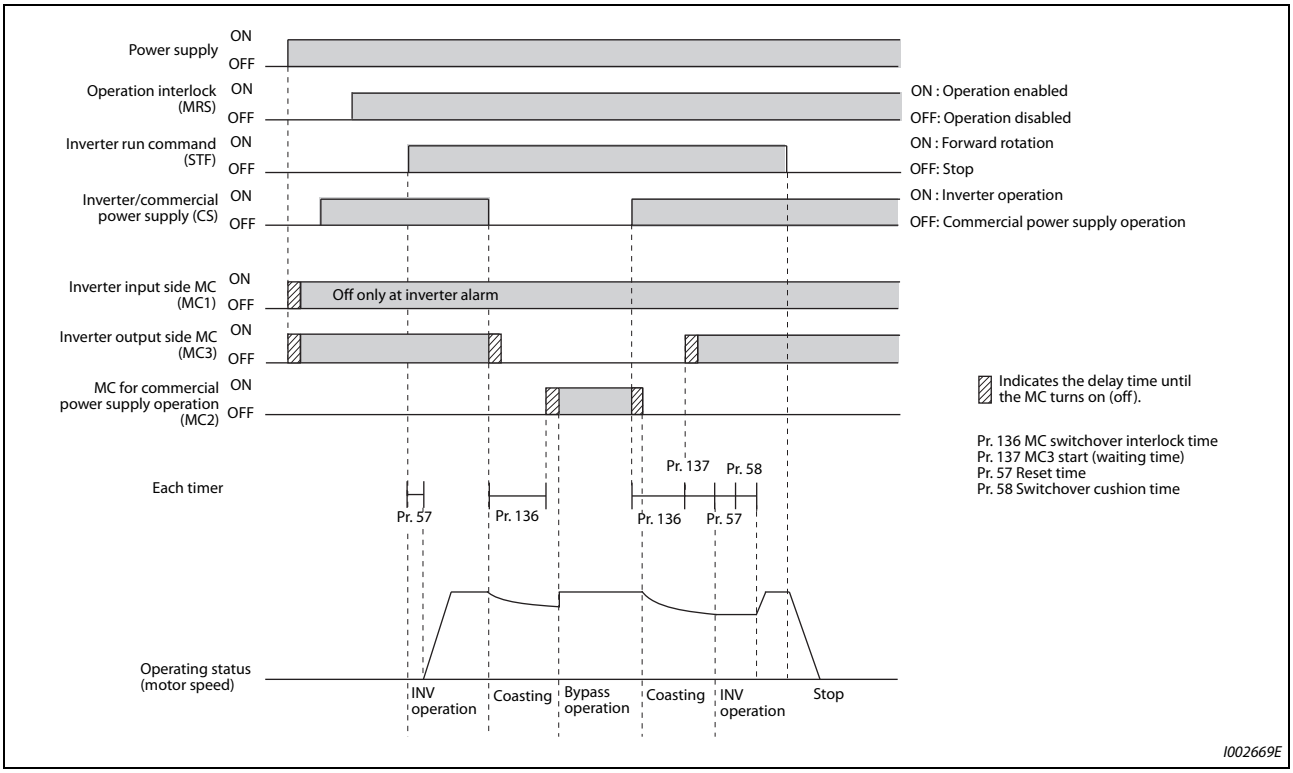


***Fig. 5-213:*** *Signal timing when there is no automatic switchover sequence*

● Example of operation sequence with automatic bypass sequence
(Pr. 139 ≠ "9999", Pr. 159 = "9999")

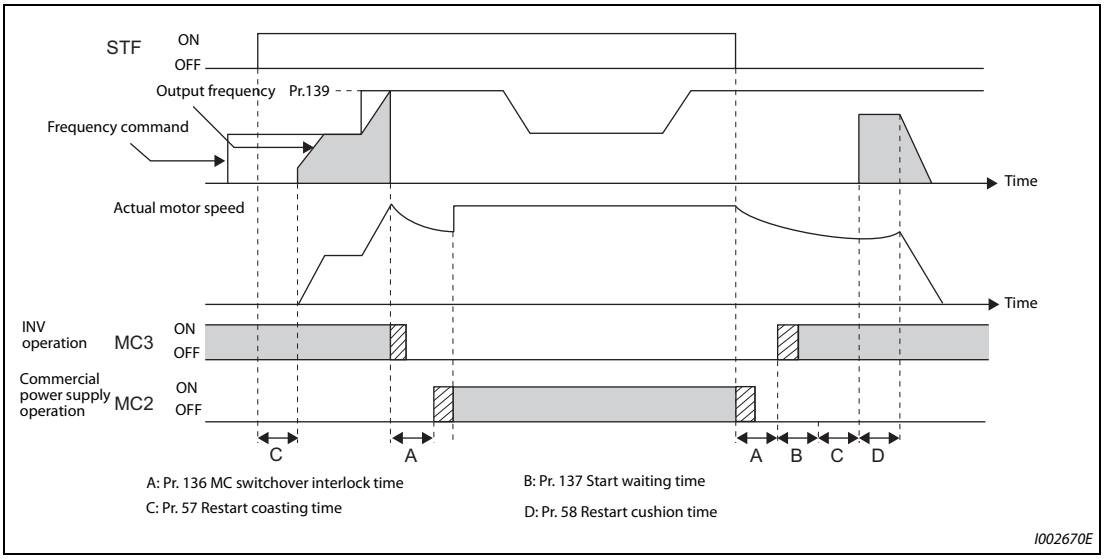


***Fig. 5-214:*** *Signal timing when there is automatic switchover sequence*

● Example of operation sequence with automatic bypass sequence
(Pr. 139 ≠ "9999", Pr. 159 ≠ "9999")

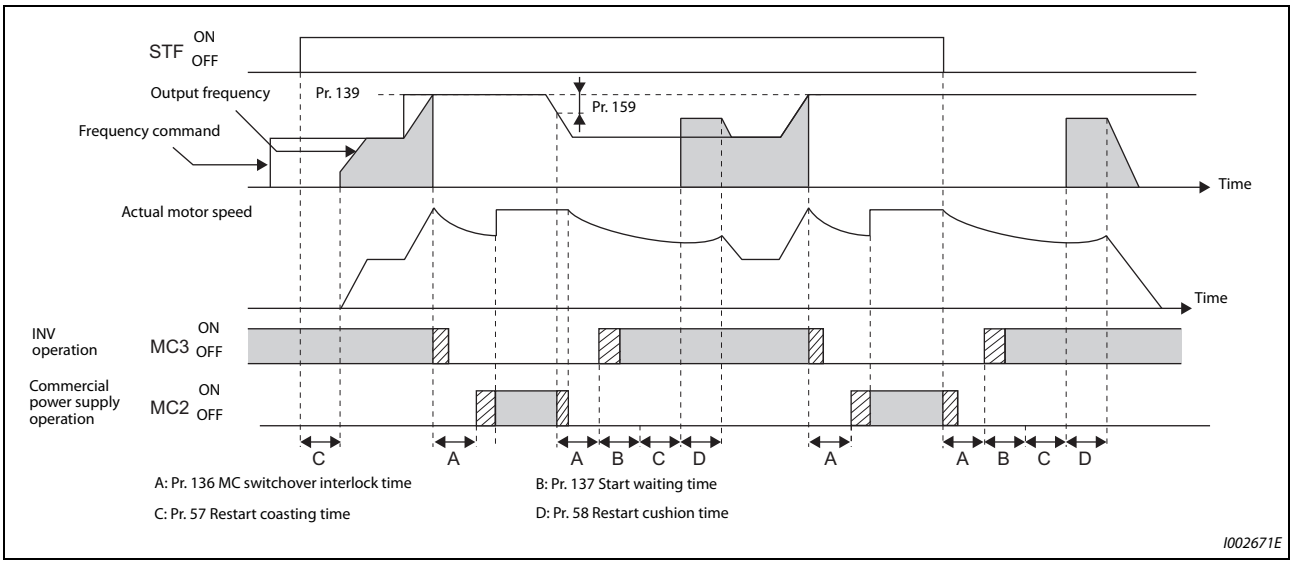


***Fig. 5-215:*** *Signal timing when there is automatic switchover sequence*

### Operation

- Procedure for operation

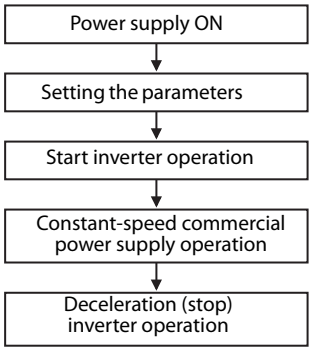


- Pr. 135 = "1" (open collector output terminal of inverter)
- Pr. 136 = "2.0 s"
- Pr. 137 = "1.0 s" (Set the time until MC3 is actually turned ON and the inverter and motor are electrically connected. If the time is short, the restart may not function properly.)
- Pr. 57 = "0.5 s"
- Pr. 58 = "0.5 s" (Always set this to switchover from the commercial power supply operation to the inverter operation.)

I002672E

***Fig. 5-216:*** *Operation procedure*

- Signal operation after setting parameters

| Status | MRS | CS | STF | MC1 | MC2 | MC3 | Remarks |
|---|---|---|---|---|---|---|---|
| Power ON | OFF (OFF) | OFF (OFF) | OFF (OFF) | OFF → ON (OFF → ON) | OFF (OFF) | OFF → ON (OFF → ON) | External operation mode (PU operation mode) |
| At start (Inverter) | OFF → ON | OFF → ON | OFF → ON | ON | OFF | ON | |
| During constant-speed operation (commercial power supply) | ON | ON → OFF | ON | ON | OFF → ON | ON → OFF | MC2 turns ON after MC3 turns OFF. Waiting time is 2 s (while coasting). |
| For deceleration, switched to the inverter operation (inverter) | ON | OFF→ ON | ON | ON | ON → OFF | OFF → ON | MC3 turns ON after MC2 turns OFF. Waiting time is 4 s (while coasting). |
| Stop | ON | ON | ON → OFF | ON | OFF | ON | |

***Tab. 5-197:*** *Signals after parameter setting*

**NOTES**

Connect the control power (R1/L11, S1/L21) in front of the input-side MC1. If the control power is connected behind the input-side MC1, the electronic bypass sequence function will not operate.

The electronic bypass sequence function is only enabled when Pr. 135 = "1" and in the External operation mode or combined operation mode (PU speed command and External operation command with Pr. 79 = "3"). MC1 and MC3 turn ON when Pr. 135 = "1" and in an operation mode other than mentioned above.

MC3 turns ON when the MRS and CS signals are ON and the STF(STR) signal is OFF. If the motor was coasted to a stop from commercial power supply operation at the previous stop, the motor starts running only after waiting the time set in Pr. 137.

Inverter operation is only available when the MRS, STF(STR), and CS signals are ON. In all other cases (when the MRS signal is ON), commercial power supply operation is available.

When the CS signal is OFF, the motor switches to the commercial power supply operation. However, when the STF(STR) signal is OFF, the motor decelerates to a stop during inverter operation.

From the point where MC2 and MC3 are both turned OFF, there is a waiting time set in Pr. 136, till MC2 or MC3 is turned ON.

Even when the electronic bypass sequence is enabled (Pr. 135 = "1"), the Pr. 136 and Pr. 137 settings are ignored in PU operation mode.
In addition, the input terminals (STF, CS, MRS, OH) return to perform their normal functions.

When the electronic bypass sequence function (Pr. 135 = "1") and PU operation interlock function (Pr. 79 = "7") are used at the same time, the MRS signal is shared with the PU operation external interlock if the X12 signal is not assigned. (The inverter operation is available when the MRS and CS signals are ON.)

Set the acceleration time to the level that does not activate the stall prevention operation.

When switching to the commercial power supply operation while a failure such as an output short circuit is occurring between the magnetic contactor MC3 and the motor, the damage may further spread. When a failure occurs between the MC3 and motor, make sure to provide a protection circuit, such as using the OH signal input.

Changing the terminal functions with Pr. 178 to Pr. 189 and Pr. 190 to Pr. 196 may affect other functions. Set parameters after confirming the function of each terminal.

Even when Pr. 138 = "1" (automatic switchover to commercial power supply operation at an inverter's fault occurrence) for the separated converter type, if a fault occurs on the converter unit, operation does not switchover to commercial power supply operation.

| **Parameters referred to** | | | |
|---|---|---|---|
| Pr. 11 | DC injection brake operation time | => | page 5-640 |
| Pr. 57 | Restart coasting time | => | page 5-540,<br>page 5-549 |
| Pr. 58 | Restart cushion time | => | page 5-540 |
| Pr. 79 | Operation mode selection | => | page 5-255 |
| Pr. 178 to Pr. 189 | (input terminal function selection) | => | page 5-409 |
| Pr. 190 to Pr. 196 | (output terminal function selection) | => | page 5-350 |

## 5.14.2 Self power management V/F Magnetic flux Vector

By turning ON the magnetic contactor (MC) on the input side before the motor is started and turning OFF the MC after the motor is stopped, power is not supplied to the main circuit, reducing the standby power.

| Pr. | Name | Initial value | Setting range | Description |
|---|---|---|---|---|
| 248<br>A006 | Self power management selection | 0 | 0 | Self power management function disabled |
| | | | 1 | Self power management function enabled (main circuit OFF at protective function activation) |
| | | | 2 | Self power management function enabled (main circuit OFF at protective function activation due to a circuit failure) |
| 137<br>A002 | Start waiting time | 0.5 s | 0 to 100 s | Set a time period that is a little longer than the time period from the ON signal input to the actual pick-up operation of MC1 (0.3 to 0.5 s). |
| 254<br>A007 | Main circuit power OFF waiting time | 600 s | 0 to 3600 s | Set the waiting time until the main circuit power supply is turned OFF after the motor is stopped. |
| | | | 9999 | The main circuit power supply is turned OFF only when the protective function selected by Pr. 248 is activated. |
| 30<br>E300 | Regenerative function selection | 0 | 100, 101 | Power supply to the inverter: AC (terminals R, S, and T)<br>When power is supplied only to the control circuit, and then switched to be supplied to both the control and main circuits, inverter reset is not performed. |
| | | | 0 to 2, 10, 11, 20, 21, 102, 110, 111, 120, 121 | For other settings, refer to page 5-652. |

### Connection diagram

- For sink logic and Pr. 192 = "17" (terminal R1, S1 inputs)

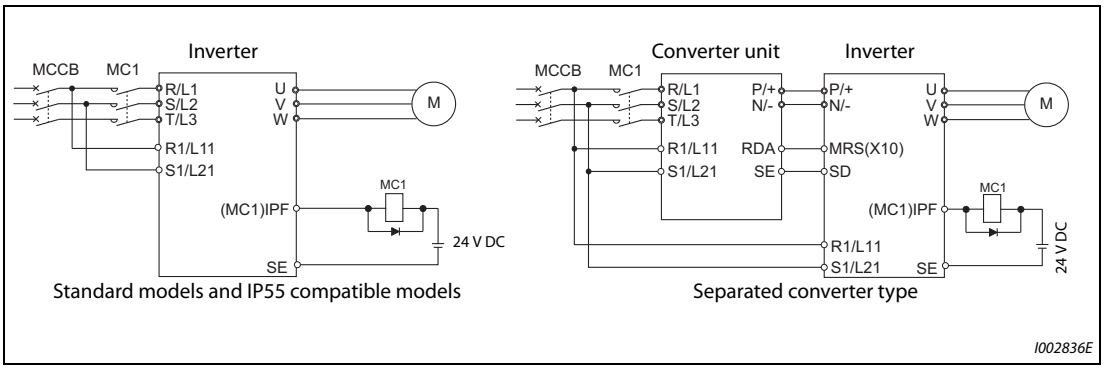


***Fig. 5-217:*** *Power input via terminals R1 and S1*

- For sink logic and Pr. 192 = "17" (24 V external power supply input)

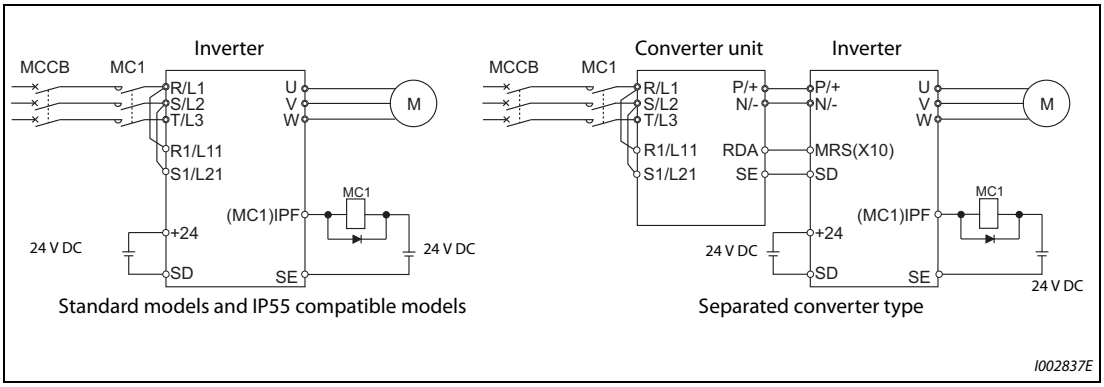


***Fig. 5-218:*** *Power input via external 24 V power supply*

**Operation of the self power management function**

- This function controls the magnetic contactor (MC) on the input side using the output relay to reduce the standby power during inverter stop. With the terminals R1/L11 and S1/L21 (refer to page 2-48) and 24 V external power supply input (refer to page 2-51), the main circuit power supply and control circuit power supply are separated, and the MC for main circuit power supply is controlled by the electronic bypass MC1 signal.
- Set Pr. 248 "Self power management selection" = "1 or 2", Pr. 30 "Regenerative function selection" ≠ "20, 21, 120, or 121" (other than DC feeding mode 2), and Pr. 190 to Pr. 196 (output terminal function selection) = "17 (positive logic)" to assign the Electronic bypass MC1 (MC1) signal to an output terminal.
- After the inverter is stopped and the time set in Pr. 11 "DC injection brake operation time" and Pr. 254 "Main circuit power OFF waiting time" have passed, turning OFF the MC1 signal releases the MC on the input side (main circuit power supply OFF). Set Pr. 254 to prevent frequent MC operation.
- Turning ON the start signal turns ON the MC1 signal and closes the MC on the input side (main circuit power supply ON). After the time set in Pr. 137 "Start waiting time" has passed, the inverter starts. Set time slightly longer (about 0.3 to 0.5 s) than the time period from the MC1-ON to the actual pick-up operation of the MC is turned ON in Pr. 137.

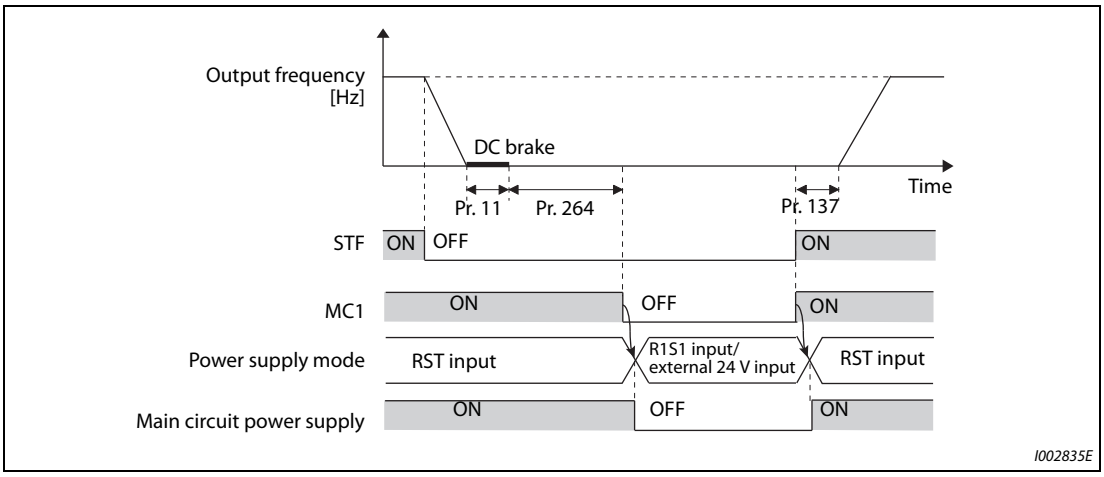


***Fig. 5-219:*** *Timing diagram of the self power management function*

- When the protective function of the inverter is activated, the MC1 signal is immediately turned OFF according to the Pr. 248 setting. (The MC1 signal is turned OFF before the time set in Pr. 254 has passed.)

- When Pr. 248="1", the MC1 signal is turned OFF when the protective function is activated due to any cause.
- When Pr. 248="2", the MC1 signal is turned OFF only when the protective function is activated due to an error resulted from a failure in the inverter circuit or a wiring error (refer to the following table). (For the alarm details, refer to page 6-9.)

| Fault record |
|---|
| Inrush current limit circuit fault (E.IOH) |
| CPU fault (E.CPU) |
| CPU fault (E.6) |
| CPU fault (E.7) |
| Parameter storage device fault (E.PE) |
| Parameter storage device fault (E.PE2) |
| 24 VDC power fault (E.P24) |
| Operation panel power supply short circuit<br>RS-485 terminals power supply short circuit (E.CTE) |
| Output side earth (ground) fault overcurrent (E.GF) |
| Output phase loss (E.LF) |
| Brake transistor alarm detection (E.BE) |
| Internal circuit fault (E.13/E.PBT) |

***Tab. 5-198:*** *Fault record at Pr. 248 = "2"*

**NOTES**

When the start signal is turned OFF before the time set in Pr. 137 has passed after the start signal is turned ON, the inverter does not start and the MC1 signal is turned OFF after the time set in Pr. 254 has passed.
If the start signal is turned ON again before the time set in Pr. 254 has passed, the inverter immediately starts outputting.

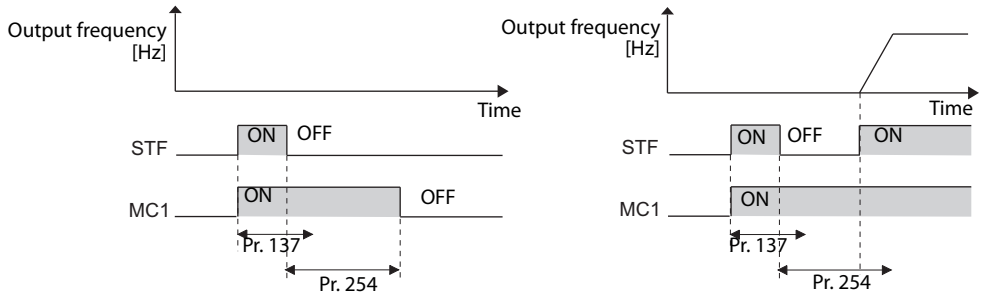


At inverter reset, the status of the MC1 signal is held and operation of the magnetic contactor is not performed.

When the inverter stops the output due to, for example, the Output stop (MRS) signal, the MC1 signal is turned OFF after the time set in Pr. 254 has passed.

During the stop, turning ON the External DC injection brake operation start signal (X13) and Pre-excitation/servo ON signal (LX) turns ON the MC1 signal.

If the inverter has a Pr. 30 setting to reset the inverter when supplying power to the main circuit is started with power supplied only to the control circuit, the inverter is reset when the self power management function is enabled, which causes a delay in starting the operation.
(For the separated converter type, a converter reset is performed regardless of the Pr.30 setting. Thus, the inverter is also reset, which causes a delay in starting the operation.)

Repeated operation of the magnetic contactor due to frequent start and stop or activation of the protective function may shorten the inverter life.

Changing the terminal assignment using Pr. 190 to Pr. 196 (output terminal function selection) may affect the other functions. Set parameters after confirming the function of each terminal.

| Parameters referred to | | | |
|---|---|---|---|
| Pr. 11 | DC injection brake operation time | => | page 5-640 |
| Pr. 30 | Regenerative function selection | => | page 5-652 |
| Pr. 190 to Pr. 196 | (output terminal function selection) | => | page 5-350 |

## 5.14.3 Brake sequence function Magnetic flux Sensorless Vector PM

This function outputs operation timing signals of the mechanical brake from the inverter, such as for lift applications.

This function is useful in preventing load slippage at a start due to poor mechanical brake timing and overcurrent alarm in stop status and enable secure operation.

| Pr. | Name | Initial value | Setting range | Description |
|---|---|---|---|---|
| 278<br>A100 | Brake opening frequency | 3 Hz | 0 to 30 Hz | Set the rated slip frequency of the motor + approx. 1.0 Hz.<br>This can be set only when Pr. 278 ≤ Pr. 282. |
| 279<br>A101 | Brake opening current | 130% | 0 to 400% | If the setting is too low, dropping of the load is more likely to occur at a start, and generally, it is set between 50 and 90%.<br>The rated inverter current is regarded as 100%. |
| 280<br>A102 | Brake opening current detection time | 0.3 s | 0 to 2 s | Generally set between 0.1 and 0.3 s. |
| 281<br>A103 | Brake operation time at start | 0.3 s | 0 to 5 s | Set the mechanical delay time until braking eases.<br>When Pr. 292 = "8" set the mechanical delay time until braking eases + approx. 0.1 to 0.2 s. |
| 282<br>A104 | Brake operation frequency | 6 Hz | 0 to 30 Hz | Turn OFF the brake opening request signal (BOF) and set the frequency for operating the electromagnetic brake. Generally, set the setting value of Pr. 278 + 3 to 4 Hz.<br>This can be set only when Pr. 282 ≥ Pr. 278. |
| 283<br>A105 | Brake operation time at stop | 0.3 s | 0 to 5 s | When Pr. 292 = "7" set the mechanical delay time until the brake closes + 0.1 s.<br>When Pr. 292 = "8" set the mechanical delay time until the brake closes + approx. 0.2 to 0.3 s. |
| 284<br>A106 | Deceleration detection function selection | 0 | 0 | The deceleration detection function disabled. |
| | | | 1 | The protective function activates when the deceleration speed of the deceleration operation is not normal. |
| 285<br>A107 | Overspeed detection frequency ① | 9999 | 0 to 30 Hz | The brake sequence fault (E.MB1) activates when the difference between the detection frequency and output frequency is equal to or greater than the setting value under encoder feedback control. |
| | | | 9999 | Overspeed detection disabled. |
| 292<br>F500 | Automatic acceleration/ deceleration | 0 | 0 | Normal operation |
| | | | 1, 11 | Operation with the shortest acceleration/ deceleration time.(Refer to page 5-247.) |
| | | | 3 | Operation with the optimum acceleration/ deceleration time.(Refer to page 5-247.) |
| | | | 5, 6 | Lift operation 1, 2. (Refer to page 5-252.) |
| | | | 7 | Brake sequence mode 1 |
| | | | 8 | Brake sequence mode 2 |
| 639<br>A108 | Brake opening current selection | 0 | 0 | Brake opening by output current |
| | | | 1 | Brake opening by motor torque |
| 640<br>A109 | Brake operation frequency selection | 0 | 0 | Brake closing operation by frequency command |
| | | | 1 | Brake closing operation by the actual motor rotation speed (estimated value) |
| 641<br>A130 | Second brake sequence operation selection | 0 | 0 | Normal operation when the RT signal is ON |
| | | | 7 | Second brake sequence 1 when the RT signal is ON |
| | | | 8 | Second brake sequence 2 when the RT signal is ON |
| | | | 9999 | First brake sequence 1 is valid when the RT signal is ON |

| Pr. | Name | Initial value | Setting range | Description | |
|---|---|---|---|---|---|
| 642<br>A120 | Second brake opening frequency | 3 Hz | 0 to 30 Hz | Refer to Pr. 278. | Set the second brake sequence function.<br>The second brake sequence function is enabled when the RT signal is ON. |
| 643<br>A121 | Second brake opening current | 130% | 0 to 400% | Refer to Pr. 279. | |
| 644<br>A122 | Second brake opening current detection time | 0.3 s | 0 to 2 s | Refer to Pr. 280. | |
| 645<br>A123 | Second brake operation time at start | 0.3 s | 0 to 5 s | Refer to Pr. 281. | |
| 646<br>A124 | Second brake operation frequency | 6 Hz | 0 to 30 Hz | Refer to Pr. 282. | |
| 647<br>A125 | Second brake operation time at stop | 0.3 s | 0 to 5 s | Refer to Pr. 283. | |
| 648<br>A126 | Second deceleration detection function selection | 0 | 0, 1 | Refer to Pr. 284. | |
| 650<br>A128 | Second brake opening current selection | 0 | 0, 1 | Refer to Pr. 639. | |
| 651<br>A129 | Second brake operation frequency selection | 0 | 0, 1 | Refer to Pr. 640. | |

① The speed deviation excess detection frequency when FR-A8AP (option) is mounted during vector control. (For the details, refer to page 5-115.)

**Connection diagram**

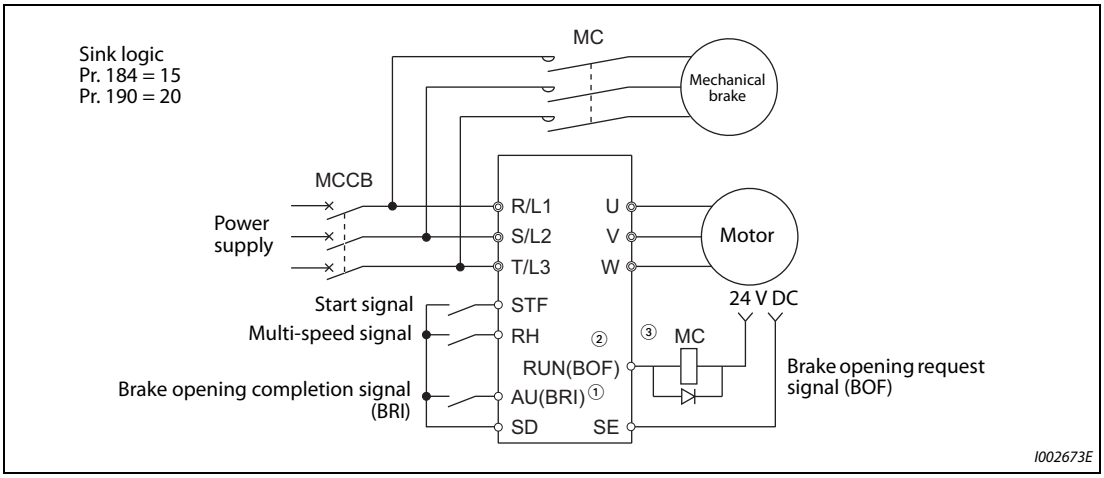


***Fig. 5-220:*** *Connection example with mechanical brake (Pr. 184 = 15, Pr. 190 = 20)*

① The input signal terminals differ by the settings of Pr. 178 to Pr. 189.

② The output signal terminals differ by the settings of Pr. 190 to Pr. 196.

③ Be careful of the permissible current of the built-in transistors on the inverter. (24 V DC 0.1 A)

**NOTES**

The automatic restart after instantaneous power failure function and orientation function do not operate when brake sequence is selected.

To use this function, set the acceleration/deceleration time to 1 s or higher.

Changing the terminal assignment using Pr. 178 to Pr. 189 (input terminal function selection) and Pr. 190 to Pr. 196 (output terminal function selection) may affect the other functions. Set parameters after confirming the function of each terminal.

**Setting the brake sequence operation**

- Select Real sensorless vector control, vector control (speed control), or Advanced magnetic flux vector control.
- Set Pr. 292 = "7 or 8 (braking sequence operation)".
  To ensure sequence operation, it is recommended to use with Pr. 292 = "7" (with brake opening completion signal input).
- Set "15" in any of Pr. 178 to Pr. 189 (input terminal function selection), and assign the brake opening completion signal (BRI) to the input terminal.
- Set "20" (positive logic) or "120" (negative logic) in any of Pr. 190 to Pr. 196 (output terminal function selection), and assign the brake opening request signal (BOF) to the output terminal.
- Use Pr. 639 Brake opening current selection to select whether the output current or the motor torque is used as a reference for the brake opening operation.
- Under Real sensorless vector control, vector control, or PM sensorless vector control, use Pr. 640 Brake operation frequency selection to select whether the frequency command or the actual motor speed (estimated value) is used as a reference for brake closing operation.
  If the brake operation timing is different from the motor speed because of the load, set Pr. 640 = "1 (brake operation with the actual motor speed (estimated value))".
- Under Advanced magnetic flux vector control, perform brake operation while referring to the frequency command regardless of the Pr. 640 setting.

**Operation with brake opening completion signal input (Pr. 292 = "7")**

- When the start signal is input to the inverter, the inverter starts running, and when the output frequency reaches the frequency set in Pr. 278 "Brake opening frequency" and the output current or the motor torque is equal to or greater than the Pr. 279 "Brake opening current" setting, the brake opening request signal (BOF) is output after the time set in Pr. 280 "Brake opening current detection time".
  The brake opening completion signal (BRI) is input, and the output frequency is increased to the set speed after the set time in Pr. 281 "Brake operation time at start".
- When the inverter decelerates to the frequency set in Pr. 282 "Brake operation frequency" during deceleration, the inverter turns OFF the BOF signal and decelerates further to the frequency set in Pr. 278. After electromagnetic brake operation completes and the inverter recognizes the turn OFF of the BRI signal, the inverter holds the frequency set in Pr. 278 for the time set in Pr. 283 "Brake operation time at stop". And after the time set in Pr. 283 passes, the inverter decelerates again. The inverter outputs is shut off when the frequency reaches Pr. 13 "Starting frequency" setting or 0.5 Hz, whichever is lower.

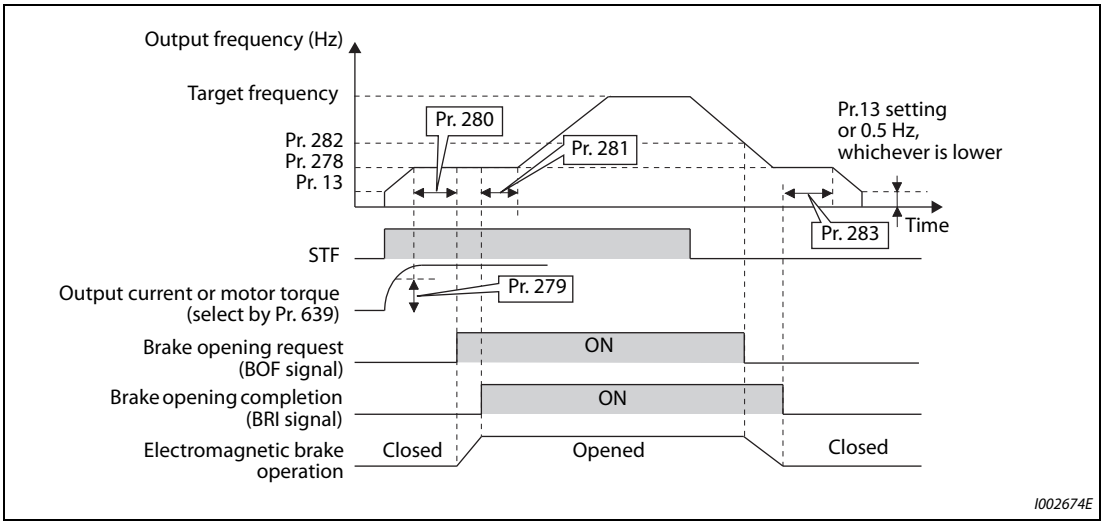


***Fig. 5-221:*** *Operation when parameter 292 = 7*

**Operation without brake opening completion signal input (Pr. 292 = "8")**

- When the start signal is input to the inverter, the inverter starts running, and when the output frequency reaches the frequency set in Pr. 278 "Brake opening frequency" and the output current or the motor torque is equal to or greater than the Pr. 279 "Brake opening current" setting, the brake opening request signal (BOF) is output after the time set in Pr. 280 "Brake opening current detection time".
  After the BOF signal is output, the output frequency is increased to the set speed after the set time in Pr. 281 "Brake operation time at start".
- When the inverter decelerates to the frequency set to Pr. 282 "Brake operation frequency" during deceleration, the inverter turns OFF the brake opening request signal (BOF) and decelerates further to the frequency set in Pr. 278. After the turn OFF of BOF signal, the inverter holds the frequency set in Pr. 278 for the time set in Pr. 283 "Brake operation time at stop". And after the set time in Pr. 283 passes, the inverter decelerates again. Pr. 13 "Starting frequency" setting or 0.5 Hz, whichever is lower

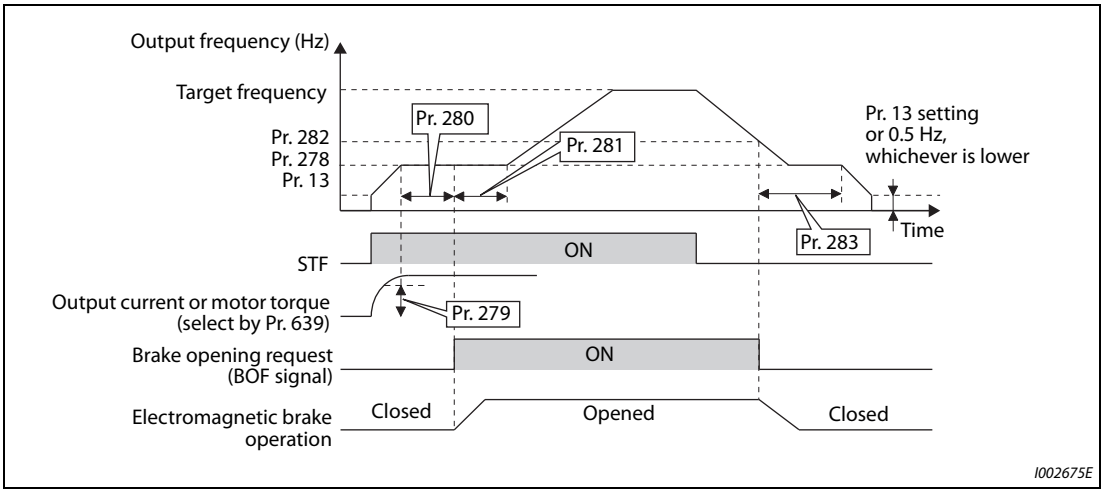


***Fig. 5-222:*** *Operation when parameter 292 = 8*

**NOTE**

Even if the brake sequence operation has been selected, inputting the JOG signal (JOG operation) will change the operation method to normal operation and give a priority to the JOG operation. Note that the JOG signal input by the brake sequence function is invalid during operation.

**Set multiple brake sequence functions (Pr. 641)**

- When the second brake sequence function is set, it is possible to switch between and use two types of brake sequence functions. Turning ON the RT signal enables the second brake sequence function.
- Select the operation of the second brake sequence function with Pr. 641 "Second brake sequence operation selection".

| Pr. 641 setting | Brake sequence function when the RT signal is ON |
|---|---|
| 0 (initial value) | Normal operation (The first and second brake sequence functions invalid) |
| 7 | Second brake sequence mode 1 |
| 8 | Second brake sequence mode 2 |
| 9999 | First brake sequence mode is valid |

***Tab. 5-199:*** *Multiple brake sequence functions*

- Set "45" in any of Pr. 178 to Pr. 189 (input terminal function selection) to assign the Second brake sequence open completion signal (BRI2) to the input terminal.

- To use the Second brake opening request signal (BOF2), set "22 (positive logic)" or "122 (negative logic)" in any of Pr. 190 to Pr. 196 (output terminal function selection) to assign the function to the output terminal.
- The method of setting the second brake sequence parameters is the same as that for the corresponding first brake sequence function parameters.
- Switchover of the brake sequence function by RT signal is valid when the inverter is stopped.

**Protective function**

If one of the following faults occur while the brake sequence function is enabled, the inverter trips, shuts off output, and turns OFF the brake opening request signal (BOF).

| Fault indication | Description |
|---|---|
| E.MB1 | When (Detection frequency) – (output frequency) ≥ Pr. 285 during encoder feedback control.<br>When Pr. 285 (Overspeed detection function) = "9999", overspeed is not detected. |
| E.MB2 | When deceleration is not normal during deceleration operation from the set frequency to the frequency set in Pr. 282 (when Pr. 284 = "1") (except stall prevention operation) |
| E.MB3 | When the BOF signal turned ON while the motor is at a stop. (load slippage prevention function) |
| E.MB4 | When more than 2 s have elapsed after the start command (forward or reverse rotation) is input, but the BOF signal does not turn ON. |
| E.MB5 | When more than 2 s have elapsed after the BOF signal turned ON, but the BRI signal does not turn ON. |
| E.MB6 | When the inverter had turned ON the brake opening request signal (BOF), but the BRI signal turned OFF. |
| E.MB7 | When more than 2 s have elapsed after the BOF signal turned OFF at a stop, but the BRI signal does not turn OFF. |

***Tab. 5-200:*** *Protective functions*

**NOTES**

During PM sensorless vector control, the brake sequence function is available with the IPM motor MM-CF only.

During deceleration, inverter output is shut OFF when the frequency reaches Pr. 13 "Starting frequency" or 0.5 Hz, whichever is lower. For Pr. 278 "Brake opening frequency", set a frequency equal to or higher than the Pr. 13 setting or 0.5 Hz.

Pr. 285 "Overspeed detection frequency" is valid under encoder feedback control (used with the FR-A8AP (option)) even if a value other than "7 or 8" is set in Pr. 292 "Automatic acceleration/deceleration".

Setting Pr. 278 too high activates the stall prevention and may cause E.MB4.

E.MB4 occurs when the acceleration time from Pr. 13 to Pr. 278 + Pr. 280 reaches or exceeds 2 s.

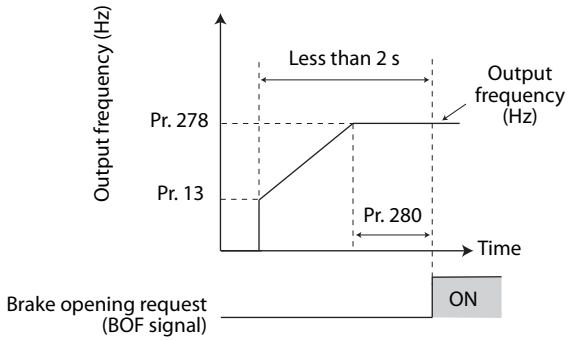

| Parameters referred to | | | |
|---|---|---|---|
| Pr. 3 | Base frequency | => | page 5-631 |
| Pr. 180 to Pr. 186 | (input terminal function selection) | => | page 5-409 |
| Pr. 190 to Pr. 195 | (output terminal function selection) | => | page 5-350 |

## 5.14.4 Stop-on-contact control Magnetic flux Sensorless

To ensure accurate positioning at the upper limit, etc. of a lift, stop-on-contact control causes the mechanical brake to close while the motor creates a holding torque to keep the load in contact with a mechanical stopper, etc.

This function suppresses vibration that is likely to occur when the load is stopped upon contact in lift applications, thereby ensuring reliable and highly accurate positioning stop.

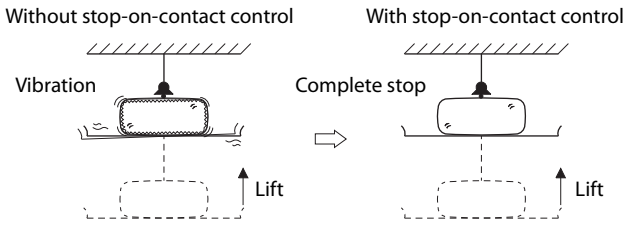


***Fig. 5-223:*** *Suppressing vibration in vertical motion applications*

| Pr. | Name | Initial value | Setting range | Description | |
|---|---|---|---|---|---|
| 6<br>D303 | Multi-speed setting (low speed) | 10 Hz | 0 to 590 Hz | Set the output frequency for stop-on-contact control. | |
| 22<br>H500 | Stall prevention operation level | 150% | 0 to 400% | Set the stall prevention operation level for stop-on-contact control.<br>The smaller value set in either Pr. 22 or Pr. 48 has priority. | |
| 48<br>H600 | Second stall prevention operation level | 150% | 0 to 400% | | |
| 270<br>A200 | Stop-on contact/load torque high-speed frequency control selection | 0 | 0 | Normal operation | |
| | | | 1 | Stop-on-contact control | |
| | | | 2 | Load torque high-speed frequency control (Refer to page 5-478.) | |
| | | | 3 | Stop-on contact + load torque high speed frequency control (Refer to page 5-478) | |
| | | | 11 | Stop-on-contact control | E.OLT is invalid under stop-on-contact control |
| | | | 13 | Stop-on contact + load torque high speed frequency control (Refer to page 5-478.) | |
| 275<br>A205 | Stop-on contact excitation current low-speed multiplying factor | 9999 | 0 to 300% | Set the force (holding torque) for stop-on-contact control.<br>Normally, set it from 130 to 180%. | |
| | | | 9999 | No compensation. | |
| 276<br>A206 | PWM carrier frequency at stop-on contact | 9999 | 0 to 9 ① | Set a PWM carrier frequency for stop-on-contact control.<br>For Real sensorless vector control, the carrier frequency is always 2 kHz when the setting value is 0 to 5 and always 6 kHz when the setting value is 6 to 9. (Valid at the output frequency of 3 Hz or less.) | |
| | | | 0 to 4 ② | | |
| | | | 9999 | As set in Pr. 72 "PWM frequency selection". | |

① The setting range of FR-A820-03160(55K) or lower and FR-A840-01800(55K) or lower

② The setting range of FR-A820-03800(75K) or higher and FR-A840-02160(75K) or higher

### Connection and operation example

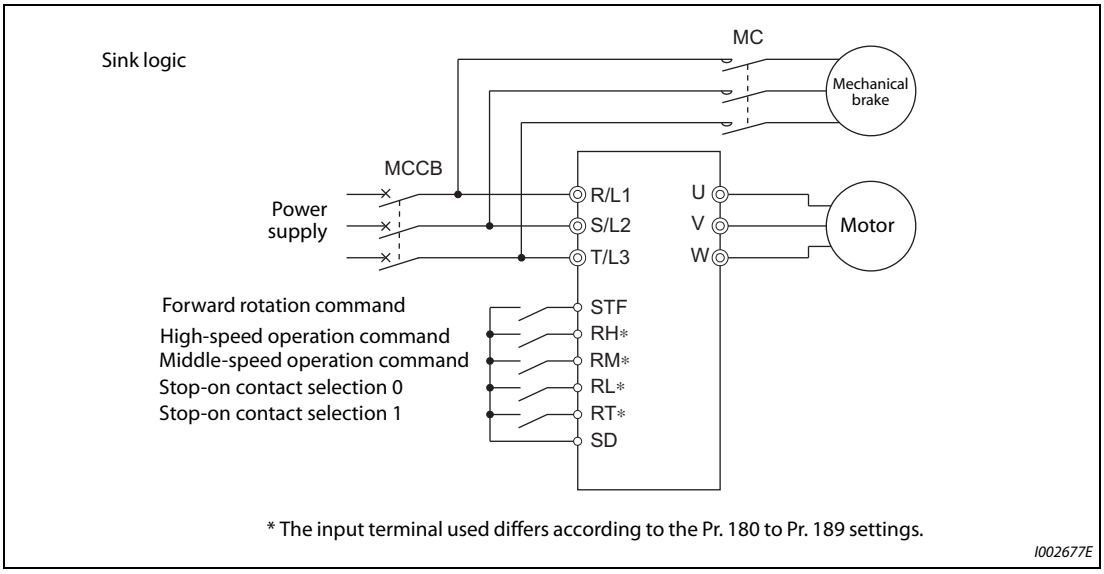


***Fig. 5-224:*** *Connection example*

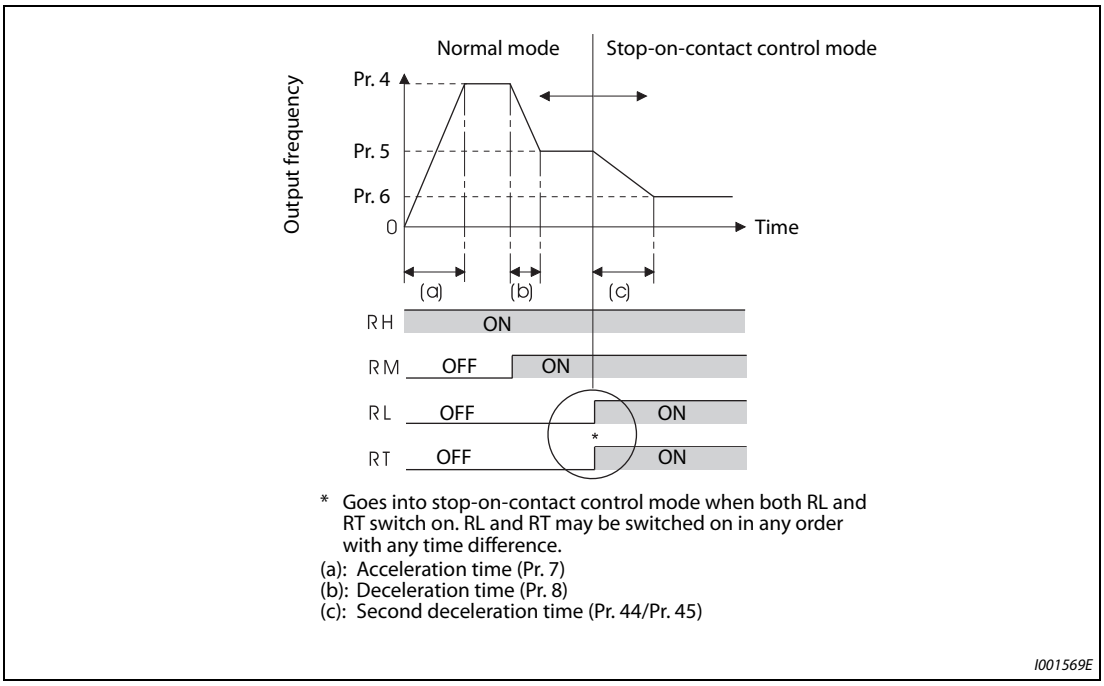


***Fig. 5-225:*** *Switching to the stop-on contact control mode*

**Setting the stop-on-contact control**

- Make sure that the inverter is in External or Network operation mode. (Refer to page 5-255.)
- Select either Real sensorless vector control (speed control) or Advanced magnetic flux vector control.
- Set "1, 3, 11 or 13" in Pr. 270 "Stop-on contact/load torque high-speed frequency control selection".
- Set the output frequency for stop-on-contact control in Pr. 6 "Multi-speed setting (low speed)". Set the frequency as low as possible (about 2 Hz). If a frequency higher than 30 Hz is set, it operates with 30 Hz.
- When both the RT and RL signals are switched ON, the inverter enters the stop-on-contact control, and operation is performed at the frequency set in Pr. 6 independently of the preceding speed.
- Setting Pr. 270 = "11 or 13" disables stall prevention stop (E.OLT) during stop-on-contact control (with both RL and RT signals ON).

**NOTES**

By increasing the Pr. 275 setting, the low-speed (stop-on-contact) torque increases, but overcurrent fault (E.OC□) may occur or the machine may oscillate in stop-on-contact status.

The stop-on-contact function is different from the servo-lock function, and if used to stop or hold a load for an extended period, this function can cause the motor to overheat.
After a stop, immediately switch to a mechanical brake to hold the load.

Under the following operating conditions, the stop-on-contact function is invalid:
PU operation (Pr. 79), JOG operation (JOG signal), PU + External operation (Pr. 79), PID control function operation (Pr. 128), Remote setting function operation (Pr. 59), Automatic acceleration/deceleration (Pr. 292), Start time tuning, Orientation control function operation

When performing stop-on-contact control during encoder feedback control, encoder feedback control is invalid due to a transition to the stop-on-contact control mode.

**Function switching of stop-on-contact control selection**

| Main functions | Normal operation (either RL or RT is OFF or both are OFF) | | Stop-on-contact control (both RL and RT are ON) | |
|---|---|---|---|---|
| | Real sensorless vector control | Advanced magnetic flux vector control | Real sensorless vector control | Advanced magnetic flux vector control |
| Output frequency | Multi-speed, 0 to 5 V, 0 to 10 V 4 to 20 mA, etc. | | Pr. 6 setting | |
| Stall prevention operation level | — | Pr. 22 setting | — | The smaller value set in either Pr. 22 or Pr. 48. ① |
| Torque limit level | Pr. 22 setting | — | Pr. 22 setting | — |
| Excitation current low-speed scaling factor | — | | The current is compensated by Pr. 275 (50 to 300%) setting from normal operation. | |
| Carrier frequency | Pr. 72 setting | | When output frequency is 3 Hz or lower, Pr. 276 setting (Pr. 72 when Pr. 276 = "9999") | |
| Fast-response current limit | — | Enabled | — | Disabled |

***Tab. 5-201:*** *Function switching of stop-on-contact control selection*

① When RL and RT are ON, Pr. 49 "Second stall prevention operation frequency" is invalid.

**Setting the frequency during stop-on-contact control (Pr. 270 = "1, 3, 11 or 13")**

- The following table lists the frequencies set when the input terminals (RH, RM, RL, RT, JOG) are selected together. Grey shaded fields indicate stop-on-contact control is valid.
- Stop-on-contact control is disabled when remote setting function is selected (Pr. 59 = "1 to 3").

| Input signal | | | | | Set frequency |
|---|---|---|---|---|---|
| RH | RM | RL | RT | JOG | |
| ON | | | | | Pr. 4 "Multi-speed setting (high speed)" |
| | ON | | | | Pr. 5 "Multi-speed setting (middle speed)" |
| | | ON | | | Pr. 6 "Multi-speed setting (low speed)" |
| | | | ON | | By 0 to 5 V (0 to 10 V), 4 to 20 mA input |
| | | | | ON | Pr. 15 "Jog frequency" |
| ON | ON | | | | Pr. 26 "Multi-speed setting (speed 6)" |
| ON | | ON | | | Pr. 25 "Multi-speed setting (speed 5)" |
| ON | | | ON | | Pr. 4 "Multi-speed setting (high speed)" |
| ON | | | | ON | Pr. 15 "Jog frequency" |
| | ON | ON | | | Pr. 24 "Multi-speed setting (speed 4)" |
| | ON | | ON | | Pr. 5 "Multi-speed setting (middle speed)" |
| | ON | | | ON | Pr. 15 "Jog frequency" |
| | | ON | ON | | Pr. 6 "Multi-speed setting (low speed)" |
| | | ON | | ON | Pr. 15 "Jog frequency" |
| | | | ON | ON | Pr. 15 "Jog frequency" |
| | | ON | ON | ON | Pr. 15 "Jog frequency" |

| Input signal | | | | | Set frequency |
|---|---|---|---|---|---|
| RH | RM | RL | RT | JOG | |
| | ON | | ON | ON | Pr. 15 "Jog frequency" |
| | ON | ON | | ON | Pr. 15 "Jog frequency" |
| | ON | ON | ON | | Pr. 6 "Multi-speed setting (low speed)" |
| ON | | | ON | ON | Pr. 15 "Jog frequency" |
| ON | | ON | | ON | Pr. 15 "Jog frequency" |
| ON | | ON | ON | | Pr. 6 "Multi-speed setting (low speed)" |
| ON | ON | | | ON | Pr. 15 "Jog frequency" |
| ON | ON | | ON | | Pr. 26 "Multi-speed setting (speed 6)" |
| ON | ON | ON | | | Pr. 27 "Multi-speed setting (speed 7)" |
| | ON | ON | ON | ON | Pr. 15 "Jog frequency" |
| ON | | ON | ON | ON | Pr. 15 "Jog frequency" |
| ON | ON | | ON | ON | Pr. 15 "Jog frequency" |
| ON | ON | ON | | ON | Pr. 15 "Jog frequency" |
| ON | ON | ON | ON | | Pr. 6 "Multi-speed setting (low speed)" |
| ON | ON | ON | ON | ON | Pr. 15 "Jog frequency" |
| | | | | | By 0 to 5 V (0 to 10 V), 4 to 20 mA input |

***Tab. 5-202:*** *Frequency and combined input signals*

**NOTE**

Changing the terminal assignment using Pr. 178 to Pr. 189 (input terminal function selection) may affect the other functions. Set parameters after confirming the function of each terminal.

| Parameters referred to | | | |
|---|---|---|---|
| Pr. 4 to Pr. 6, Pr. 24 to Pr. 27 | (multi-speed setting) | => | page 5-182 |
| Pr. 15 | Jog frequency | => | page 5-278 |
| Pr. 22 | Stall prevention operation level | => | page 5-83 |
| Pr. 48 | Second stall prevention operation level | => | page 5-83 |
| Pr. 22 | Torque limit level | => | page 5-83 |
| Pr. 59 | Remote function selection | => | page 5-239 |
| Pr. 72 | PWM frequency selection | => | page 5-211 |
| Pr. 79 | Operation mode selection | => | page 5-255 |
| Pr. 95 | Online auto tuning selection | => | page 5-451 |
| Pr. 128 | PID action selection | => | page 5-504 |
| Pr. 178 to Pr. 189 | (input terminal function selection) | => | page 5-409 |
| Pr. 270 | Stop-on contact/load torque high-speed frequency control selection | => | page 5-478 |
| Pr. 292 | Automatic acceleration/deceleration | => | page 5-247, page 5-252 |

## 5.14.5 Load torque high speed frequency control

Load torque high-speed frequency control is a function that automatically sets the maximum operable frequency according to the load.

The load size during power driving is estimated by detecting average currents at set timings after a start. When the load is light, the frequency is increased from the originally-set frequency. (In regenerative driving, the frequency is not increased.)

This function is designed to increase speed automatically under light load, for example to minimize the incoming/outgoing time in a multi-story parking lot.

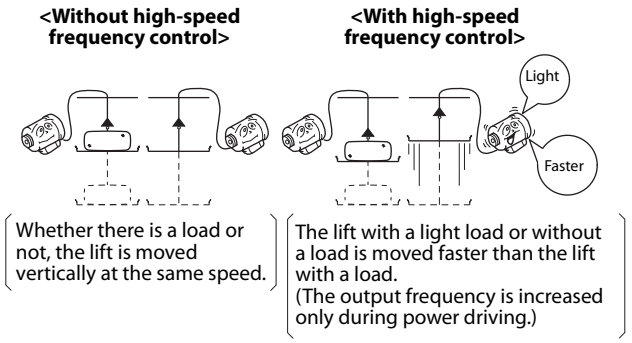


***Fig. 5-226:*** *Increased speed under light load*

| Pr. | Name | Initial value | | Setting range | Description | |
|---|---|---|---|---|---|---|
| | | FM | CA | | | |
| 4<br>D301 | Multi-speed setting (high speed) | 60 Hz | 50 Hz | 0 to 590 Hz | Set the higher-speed frequency. | |
| 5<br>D302 | Multi-speed setting (middle speed) | 30 Hz | | 0 to 590 Hz | Set the lower-speed frequency. | |
| 270<br>A200 | Stop-on contact/load torque high-speed frequency control selection | 0 | | 0 | Normal operation | |
| | | | | 1 | Stop-on-contact control (Refer to page 5-474.) | |
| | | | | 2 | Load torque high-speed frequency control | |
| | | | | 3 | Stop-on-contact (refer to page 5-474) + load torque high- speed frequency control | |
| | | | | 11 | Stop-on-contact control | E.OLT invalid under stop-on-contact control |
| | | | | 13 | Stop-on-contact + load torque high-speed frequency control (Refer to page 5-474.) | |
| 271<br>A201 | High-speed setting maximum current | 50% | | 0 to 400% | Set the upper and lower limits of the current at high and middle speeds. | |
| 272<br>A202 | Middle-speed setting minimum current | 100% | | 0 to 400% | | |
| 273<br>A203 | Current averaging range | 9999 | | 0 to 590 Hz | Set the average current during acceleration from (Pr. 273 × 1/2) Hz to (Pr. 273) Hz. | |
| | | | | 9999 | Set the average current during acceleration from (Pr. 5 × 1/2) Hz to (Pr. 5) Hz. | |
| 274<br>A204 | Current averaging filter time constant | 16 | | 1 to 4000 | Set the time constant of the primary delay filter relative to the output current.<br>(The time constant [ms] is 0.5 × Pr. 274, and the initial value is 8 ms.)<br>A larger setting results in a stable operation with poorer response. | |

### Connection diagram

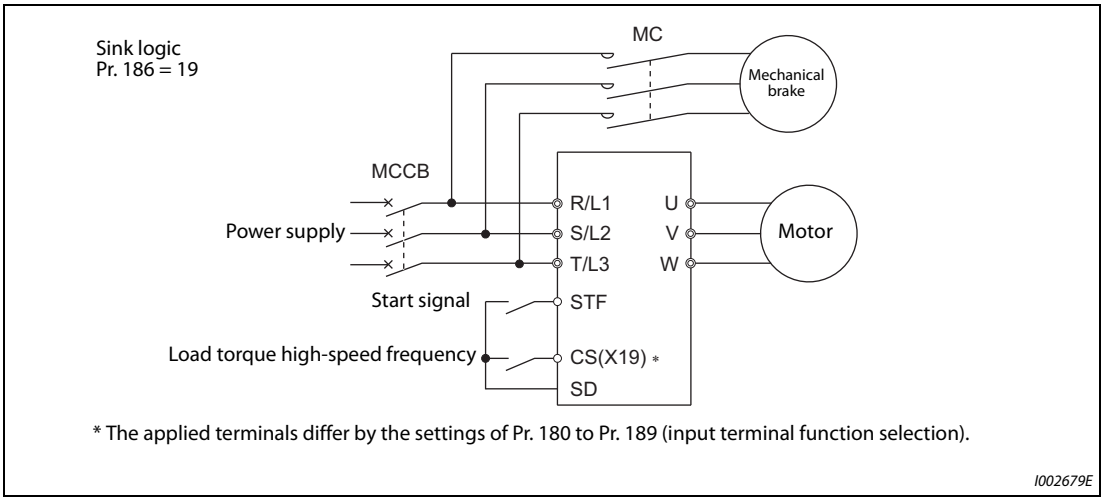


***Fig. 5-227:*** *Connection example with mechanical brake*

### Load torque high speed frequency control setting

- Set "2, 3 or 13" in Pr. 270 "Stop-on contact/load torque high-speed frequency control selection".
- When the load torque high-speed frequency selection (X19) signal ON, the inverter automatically adjusts the maximum frequency in the range between the Pr. 4 "Multi-speed setting (high speed)" and Pr. 5 "Multi-speed setting (middle speed)" in accordance with the average current in the current averaging range. The current averaging range is from the 1/2 the Pr. 5 to the full Pr. 5 setting (in the current averaging range).
- To use the X19 signal, set "19" in any of Pr. 178 to Pr. 189 (input terminal function selection) to assign the function to an input terminal.
- This is valid in External operation mode and Network operation mode.
- The control can be activated at every start.

**Operation of load torque high-speed frequency control**

- When the average current of the current averaging range (chart A below) during operation with the X19 signal ON is the "rated inverter current × Pr. 271 setting (%)" or less, the maximum frequency automatically becomes the Pr. 4 "Multi-speed setting (high speed)" setting value.
- When the average current of the current averaging range (chart B below) during operation with the X19 signal ON is greater than the "rated inverter current × Pr. 272 setting (%)", the maximum frequency automatically becomes the Pr. 5 "Multi-speed setting (middle speed)" setting value.
- During regeneration load operation, the Pr. 5 setting is the maximum frequency regardless of the average current.
- When Pr. 273 is used, the current averaging range can be set between one half of the frequency of the Pr. 273 setting value and the Pr. 273 set frequency. (However, the setting value must be smaller than Pr. 5 setting.)

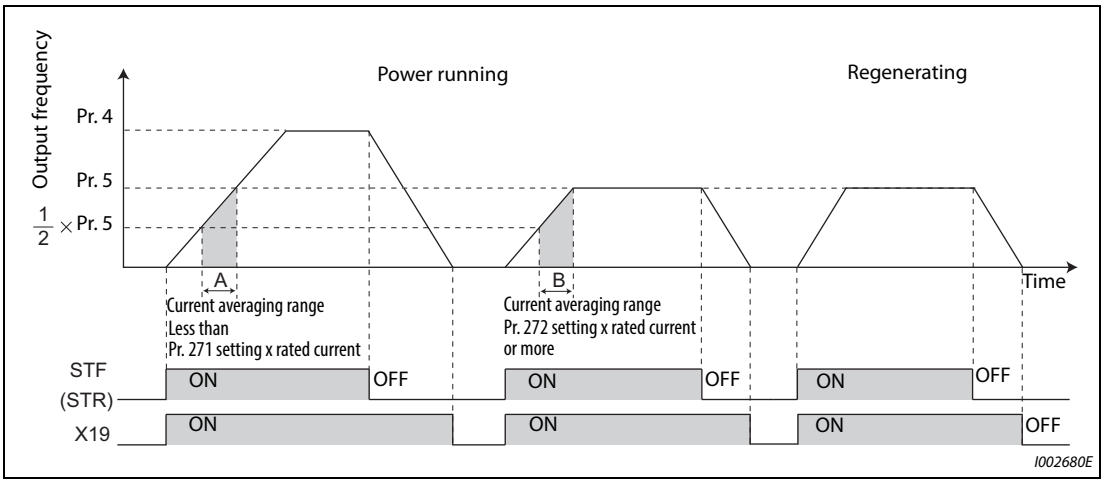


***Fig. 5-228:*** *Operation of load torque high-speed frequency control*

- When the average current is larger than "rated inverter current × Pr. 271 setting (%)" and smaller than "rated inverter current × Pr. 272 setting (%)", linear compensation is performed as shown below.

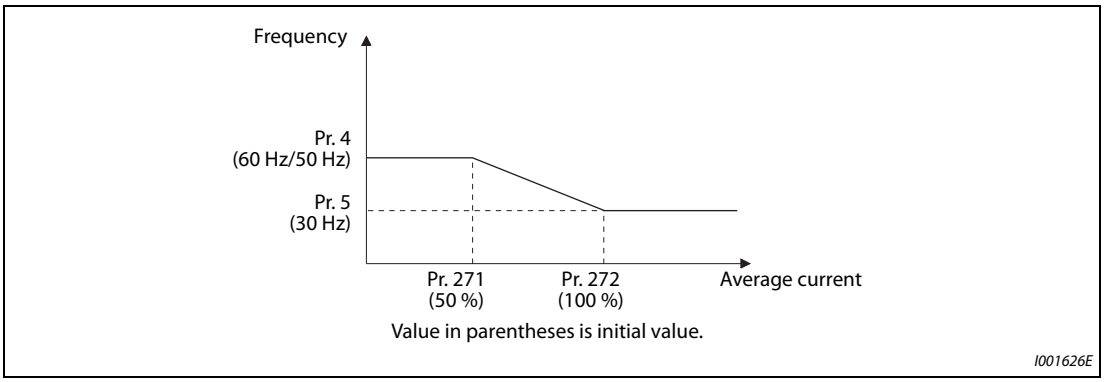


***Fig. 5-229:*** *Current averaging range*

**NOTES**

When the current averaging range includes the constant-output range, the output current may become large in the constant-output range.

When the average current value in the current averaging range is small, deceleration time becomes longer as the running frequency increases.

The automatic restart after instantaneous power failure function, fast-response current limit operation, fast-response current limit operation, shortest acceleration/deceleration, and optimum acceleration/deceleration are invalid.

Changing the terminal assignment with Pr. 178 to Pr. 189 (input terminal function selection) may affect other functions. Set parameters after confirming the function of each terminal.

Under the following operating conditions, the load torque high-speed frequency function is invalid:
PU operation (Pr. 79), PU + External operation (Pr. 79), JOG operation (JOG signal), PID control function operation (X14 signal), remote setting function operation (Pr. 59), orientation control function operation, multi-speed setting (RH, RM, RL signal), torque control, position control.

When the average current during acceleration is too small, it may be judged as regeneration, and the maximum frequency may become the setting of Pr. 5.

The output frequency may change due to the load, so do not get unnecessarily close to the motor or machine.

| **Parameters referred to** | | | |
|---|---|---|---|
| Pr. 4 to Pr. 6,<br>Pr. 24 to Pr. 27 | (multi-speed setting) | => | page 5-182 |
| Pr. 57 | Restart coasting time | => | page 5-540, page 5-549 |
| Pr. 59 | Remote function selection | => | page 5-239 |
| Pr. 79 | Operation mode selection | => | page 5-255 |
| Pr. 128 | PID action selection | => | page 5-504 |
| Pr. 178 to Pr. 189 | (input terminal function selection) | => | page 5-409 |

## 5.14.6 Traverse function

The traverse operation, which oscillates the frequency at a constant cycle, is available.

| Pr. | Name | Initial value | Setting range | Description |
|---|---|---|---|---|
| 592<br>A300 | Traverse function selection | 0 | 0 | Traverse function invalid |
| | | | 1 | Traverse function valid only in External operation mode |
| | | | 2 | Traverse function valid regardless of the operation mode |
| 593<br>A301 | Maximum amplitude amount | 10% | 0 to 25% | Level of amplitude during traverse operation |
| 594<br>A302 | Amplitude compensation amount during deceleration | 10% | 0 to 50% | Compensation amount during amplitude inversion (from acceleration to deceleration) |
| 595<br>A303 | Amplitude compensation amount during acceleration | 10% | 0 to 50% | Compensation amount during amplitude inversion (from deceleration to acceleration) |
| 596<br>A304 | Amplitude acceleration time | 5 s | 0.1 to 3600 s | Time period of acceleration during traverse operation |
| 597<br>A305 | Amplitude deceleration time | 5 s | 0.1 to 3600 s | Time period of deceleration during traverse operation |

- Setting Pr. 592 "Traverse function selection" = "1 or 2" will enable the traverse function.
- Assigning the Traverse function selection (X37) signal to the input terminal will enable the traverse function only when the X37 signal is ON. (When the X37 signal is not assigned, the traverse function is always available.) To input the X37 signal, set "37" in any of Pr.178 to Pr.189 (input terminal function selection) to assign the function to a terminal.

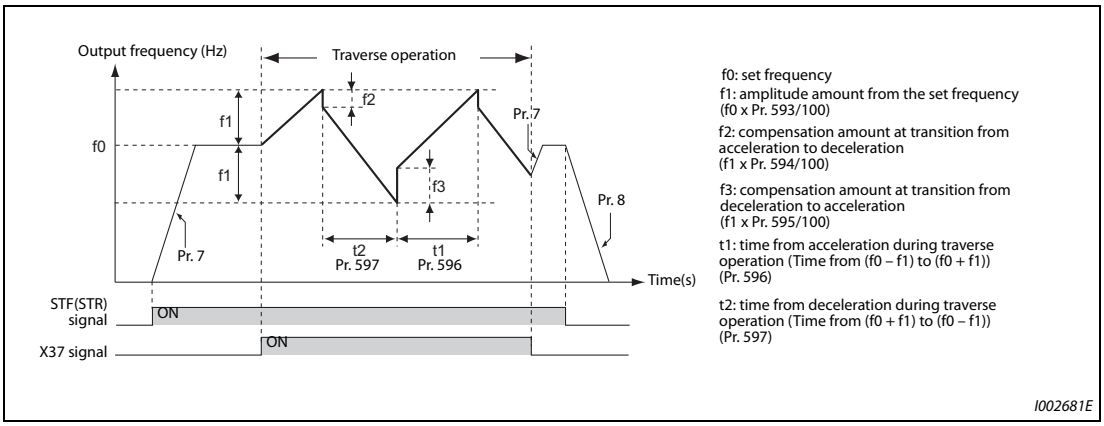


***Fig. 5-230:*** *Traverse function*

- The motor accelerates to the set frequency f0 according to the normal Pr. 7 "Acceleration time" at turn ON of the start command (STF or STR).
- When the output frequency reaches f0 and the X37 signal turns ON, the inverter begins traverse operation and accelerates to f0 + f1. The acceleration time at this time is according to the Pr. 596 setting. (If the X37 signal turns ON before the output frequency reaches f0, traverse operation begins after the output frequency reaches f0.)
- After the inverter accelerates to f0 + f1, this is compensated with f2 (f1 × Pr. 594), and the inverter decelerates to f0 - f1. The deceleration time at this time is according to the Pr. 597 setting.
- After the inverter decelerates to f0 - f1, this is compensated with f3 (f1 × Pr. 595), and the inverter accelerates again to f0 + f1.

- When the X37 signal turns OFF during traverse operation, the inverter accelerates/decelerates to f0 according to the normal acceleration/deceleration time (Pr. 7, Pr. 8). If the start command (STF or STR) is turned OFF during traverse operation, the inverter decelerates to a stop according to the normal deceleration time (Pr. 8).

**NOTES**

If the set frequency (f0) and traverse operation parameters (Pr. 598 to Pr. 597) are changed during traverse operation, this is applied in operations after the output frequency reaches f0 before the change was made.

If the output frequency exceeds Pr. 1 "Maximum frequency" or Pr. 2 "Minimum frequency" during traverse operation, the output frequency is clamped at the maximum/minimum frequency when the set pattern exceeds the maximum/minimum frequency.

When the traverse function and S-pattern acceleration/deceleration (Pr. 29 ≠ "0") are selected, S-pattern acceleration/deceleration operation occurs only in the range operated at the normal acceleration/deceleration time (Pr. 7, Pr. 8). Acceleration/deceleration during traverse operation is performed linearly.

If stall prevention activates during traverse operation, traverse operation stops and normal operation begins. When stall prevention operation is completed, the inverter accelerates/decelerates to f0 at the normal acceleration/deceleration time (Pr. 7, Pr. 8). After the output frequency reaches f0, the traverse operation begins again.

If the value of the amplitude inversion compensation amount (Pr. 594, Pr. 595) is too large, an overvoltage trip or stall prevention occurs, and pattern operation cannot be performed as set.

Changing the terminal assignment using Pr. 178 to Pr. 189 (input terminal function selection) may affect the other functions. Set parameters after confirming the function of each terminal.

| **Parameters referred to** | | | |
|---|---|---|---|
| Pr. 3 | Base frequency | => | page 5-631 |
| Pr. 180 to Pr. 186 | (input terminal function selection) | => | page 5-409 |
| Pr. 190 to Pr. 195 | (output terminal function selection) | => | page 5-350 |

## 5.14.7 Swinging suppression control Sensorless Vector

When an object is moved by a gantry crane, swinging is suppressed on the crane's traveling axis.

| Pr. | Name | Initial value | Setting range | Description |
|---|---|---|---|---|
| 1072<br>A310 | DC brake judgment time for swinging suppression control operation | 3 s | 0 to 10 s | Set the waiting time to start the DC injection brake (zero speed control, servo lock) after the output frequency reaches the Pr. 10 "DC injection brake operation frequency" or lower. |
| 1073<br>A311 | Swinging suppression control operation selection | 0 | 0 | Swinging suppression control disabled |
| | | | 1 | Swinging suppression control enabled |
| 1074<br>A312 | Swinging suppression frequency | 1 Hz | 0.05 to 3 Hz | Sets the swinging frequency of the load. |
| | | | 999 | A swinging frequency is estimated based on the Pr. 1077 to Pr. 1079 settings, and swinging suppression control is performed. |
| 1075<br>A313 | Swinging suppression depth | 0 | 0 to 3 | 0 (Deep) ➔ 3 (Shallow) |
| 1076<br>A314 | Swinging suppression width | 0 | 0 to 3 | 0 (Narrow) ➔ 3 (Wide) |
| 1077<br>A315 | Rope length | 1 m | 0.1 to 50 m | Set the rope length of the crane. |
| 1078<br>A316 | Trolley weight | 1 kg | 1 to 50000 kg | Set the weight of the trolley. |
| 1079<br>A317 | Load weight | 1 kg | 1 to 50000 kg | Set the weight of the load. |

**Swinging suppression control operation (Pr. 1073)**

- Setting Pr. 1073 "Swinging suppression control operation selection" = "1" enables swinging suppression control. Swinging suppression control is available under speed control of Real sensorless vector control or vector control. (Swinging suppression control is not available under zero speed or servo lock control.)
- During operation under swinging suppression control, the travel distance becomes longer. Input a stop command earlier to avoid a collision with an obstacle.
- Deceleration stop without swinging suppression control is applied for stopping as a result of PU stop, an emergency stop command input from a communication option, Pr. 875 "Fault definition", or an emergency stop input (X92).

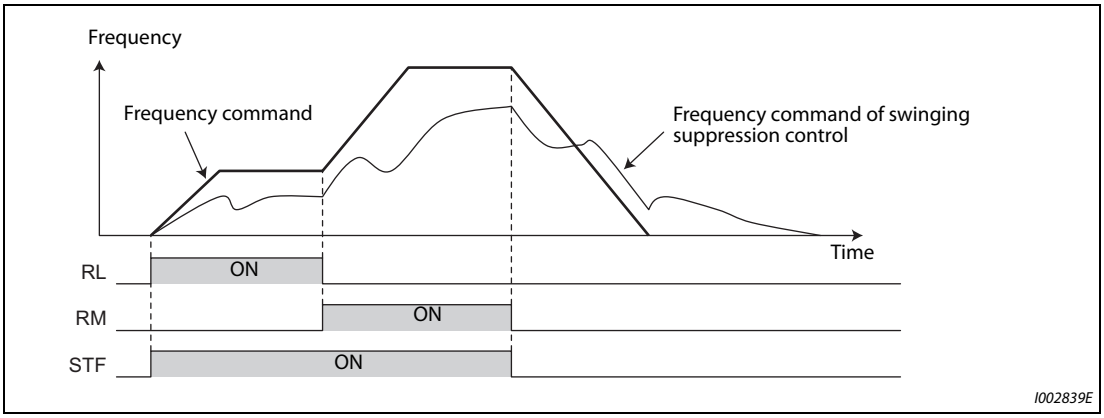


***Fig. 5-231:*** *Timing diagram of swinging suppression*

**Swinging frequency setting (Pr. 1074 to Pr. 1079)**

- Set a swinging frequency in Pr. 1074 "Swinging suppression frequency". The swinging frequency is used as a notch filter frequency. Lower the response level of speed control in the frequency band with the width set in the Pr. 1076 "Swinging suppression width" by the gain set in the Pr. 1075 "Swinging suppression depth".
- A deeper notch depth has a greater effect in reducing mechanical resonance, but because the phase delay is larger, swinging may increase. Adjust by starting from the shallowest value.

| **Setting value** | 3 | 2 | 1 | 0 |
|---|---|---|---|---|
| **Depth** | Shallow | → | ← | Deep |
| **Gain** | –4 dB | –8 dB | –14 dB | –∞ |

***Tab. 5-203:*** *Setting of depth and gain*

- If the Pr. 1076 setting is too large (the width is too wide), the response level of speed control will drop, and the system may become unstable.
- After setting Pr. 1074 = "9999", set the crane rope length in the Pr. 1077 "Rope length", the trolley weight in the Pr. 1078 "Trolley weight", and the weight of an object in the Pr. 1079 "Load weight". Then, swinging suppression control is performed using a vibration frequency estimated by the inverter.

**Waiting time for brake operation of swinging suppression control (Pr. 1072)**

Set the time from when the output frequency becomes the Pr. 10 "DC injection brake operation frequency" or less to when the zero speed control or the servo lock operation starts in the Pr. 1072 "DC brake judgment time for swinging suppression control operation".

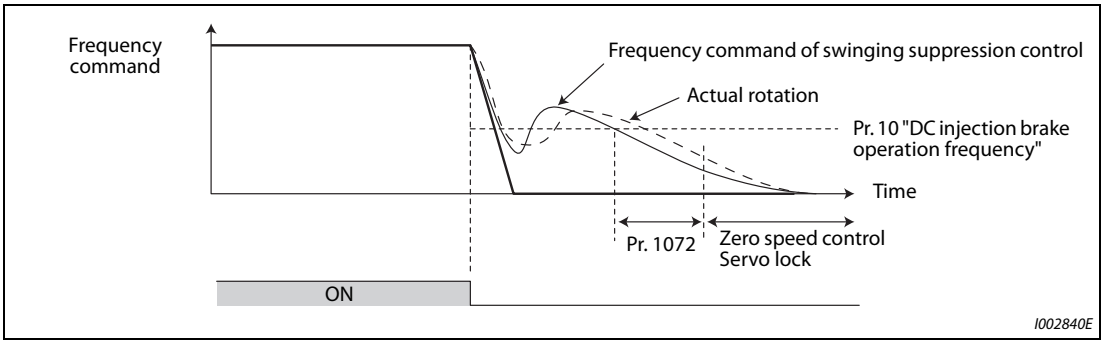


***Fig. 5-232:*** *Function of Pr. 1072*

**NOTES**

During swinging suppression control operation, even if the motor rotation is restricted to one direction in the Pr. 78 "Reverse rotation prevention selection", the motor may rotate in a direction opposite to the setting.

A protective function (E.OSD) may be activated during vibration control. When using vibration control, set Pr. 690 "Deceleration check time" = "9999 (initial value)" to disable the deceleration check function.

When swinging suppression control is enabled, regeneration avoidance, shortest acceleration/deceleration, and the traverse function are disabled.

Do not set swinging suppression control and droop control together.

| Parameters referred to | | | |
|---|---|---|---|
| Pr. 10 | DC injection brake operation frequency | => | page 5-640 |
| Pr. 78 | Reverse rotation prevention selection | => | page 5-273 |
| Pr. 286 | Droop gain | => | page 5-672 |
| Pr. 292 | Automatic acceleration/deceleration | => | page 5-247 |
| Pr. 592 | Traverse function selection | => | page 5-482 |
| Pr. 690 | Deceleration check time | => | page 5-115 |
| Pr. 875 | Fault definition | => | page 5-292 |
| Pr. 882 | Regeneration avoidance operation selection | => | page 5-662 |

## 5.14.8 Orientation control V/F Magnetic flux Vector

The inverter can adjust the stop position (Orientation control) using a position detector (encoder) attached to a place such as the main shaft of the machine.

Option FR-A8AP is required.

Because Pr. 350 "Stop position command selection" is initially set to "9999", the orientation control function is invalid.

| Pr. | Name | Initial value | Setting range | Description | |
|---|---|---|---|---|---|
| 350<br>A510 | Stop position command selection | 9999 | 0 | Internal stop position command (Pr. 356) | |
| | | | 1 | External stop position command (FR-A8AX 16-bit data) | |
| | | | 9999 | Orientation control invalid | |
| 351<br>A526 | Orientation speed | 2 Hz | 0 to 30 Hz | Turning ON the X22 signal decelerates the motor speed to the set value. | |
| 352<br>A527 | Creep speed | 0.5 Hz | 0 to 10 Hz | After the speed reaches the orientation speed, the speed decreases to the creep speed set in Pr. 352 as soon as the current position pulse reaches the creep switchover position set in Pr. 353. | |
| 353<br>A528 | Creep switchover position | 511 | 0 to 16383 | | |
| 354<br>A529 | Position loop switchover position | 96 | 0 to 8191 | As soon as the current position pulses reach the set position loop switchover position, control is changed to the position loop. | |
| 355<br>A530 | DC injection brake start position | 5 | 0 to 255 | After the motor moves into the position loop, the motor stops by the DC injection brake when the current position pulses reach the specified start position of the DC injection brake. | |
| 356<br>A531 | Internal stop position command | 0 | 0 to 16383 | When "0" is set in Pr. 350, the internal position command is activated and the setting value of Pr. 356 becomes the stop position. | |
| 357<br>A532 | Orientation in-position zone | 5 | 0 to 255 | Set the in-position width at a stop of the orientation. | |
| 358<br>A533 | Servo torque selection | 1 | 0 to 13 | Operation at orientation completion can be selected. | |
| 359<br>C141 | Encoder rotation direction | 1 | 0 | Set when using a motor for which forward rotation (encoder) is clockwise viewed from the shaft.<br> | Set for the operation at 120 Hz or less. |
| | | | 100 | | Set for the operation at a frequency higher than 120 Hz. |
| | | | 1 | Set when using a motor for which forward rotation (encoder) is counterclockwise viewed from the shaft.<br> | Set for the operation at 120 Hz or less. |
| | | | 101 | | Set for the operation at a frequency higher than 120 Hz. |
| 360<br>A511 | 16-bit data selection | 0 | 0 | Speed command | When Pr. 350 = "1" is set and the FR-A8AX is mounted together, set the stop position using 16-bit data.<br>Stop position command is input as binary regardless of the Pr. 304 setting. |
| | | | 1 | 16-bit data is used as the external position command as is. | |
| | | | 2 to 127 | Set the stop position by dividing up to 128 stop positions. | |
| 361<br>A512 | Position shift | 0 | 0 to 16383 | Shift the home position using a compensation value without changing the home position of the encoder. The stop position is a position obtained by adding the setting of Pr. 361 to the position command. | |

| Pr. | Name | Initial value | Setting range | Description |
|---|---|---|---|---|
| 362<br>A520 | Orientation position loop gain | 1 | 0.1 to 100 | When the servo torque function is selected using Pr. 358, the output frequency for generating servo torque gradually increases to the creep speed of Pr. 352 according to the slope set in Pr. 362. Although the operation becomes faster when the value is increased, hunting may occur in the machine. |
| 363<br>A521 | Completion signal output delay time | 0.5 s | 0 to 5 s | The orientation complete signal turns ON after going into the in-position width and waiting for the set time. Also, the signal turns OFF after going out of the in-position width and waiting for the set time. |
| 364<br>A522 | Encoder stop check time | 0.5 s | 0 to 5 s | If the orientation complete signal (ORA) has never been output and the encoder stays stopped for the set time without completing orientation, the orientation fault signal (ORM) is output. If the ORA signal has been output before but the orientation cannot be completed within the set time, the ORM signal is also output. |
| 365<br>A523 | Orientation limit | 9999 | 0 to 60 s | The time elapses after passing the creep switchover position is measured. If orientation cannot be completed within the set time, the orientation fault signal (ORM) is output. |
| | | | 9999 | Set to 120 s. |
| 366<br>A524 | Recheck time | 9999 | 0 to 5 s | When the start signal is turned OFF with the orientation command (X22) ON after stopping the motor by orientation control, the present position is checked again after the set time elapses, and the orientation complete signal (ORA) or orientation fault signal (ORM) is output. |
| | | | 9999 | Not checked. |
| 369<br>C140 | Number of encoder pulses | 1024 | 0 to 4096 | Set the number of encoder pulses.<br>Set the number of pulses before it is multiplied by 4. |
| 393<br>A525 | Orientation selection | 0 | 0 | Orientation is executed from the current rotation direction. |
| | | | 1 | Orientation is executed from the forward rotation direction. |
| | | | 2 | Orientation is executed from the reverse rotation direction. |
| 396<br>A542 | Orientation speed gain (P term) | 60 | 0 to 1000 | Response level during position control loop (servo rigidity) can be adjusted at orientation stop. |
| 397<br>A543 | Orientation speed integral time | 0.333 | 0 to 20 s | |
| 398<br>A544 | Orientation speed gain (D term) | 1 | 0 to 100 | Lag/advance compensation gain can be adjusted. |
| 399<br>A545 | Orientation deceleration ratio | 20 | 0 to 1000 | Make adjustment when the motor runs back at orientation stop or the orientation time is long. |

The parameters above are available be set when FR-A8AP (option) is mounted.

**Connection example**

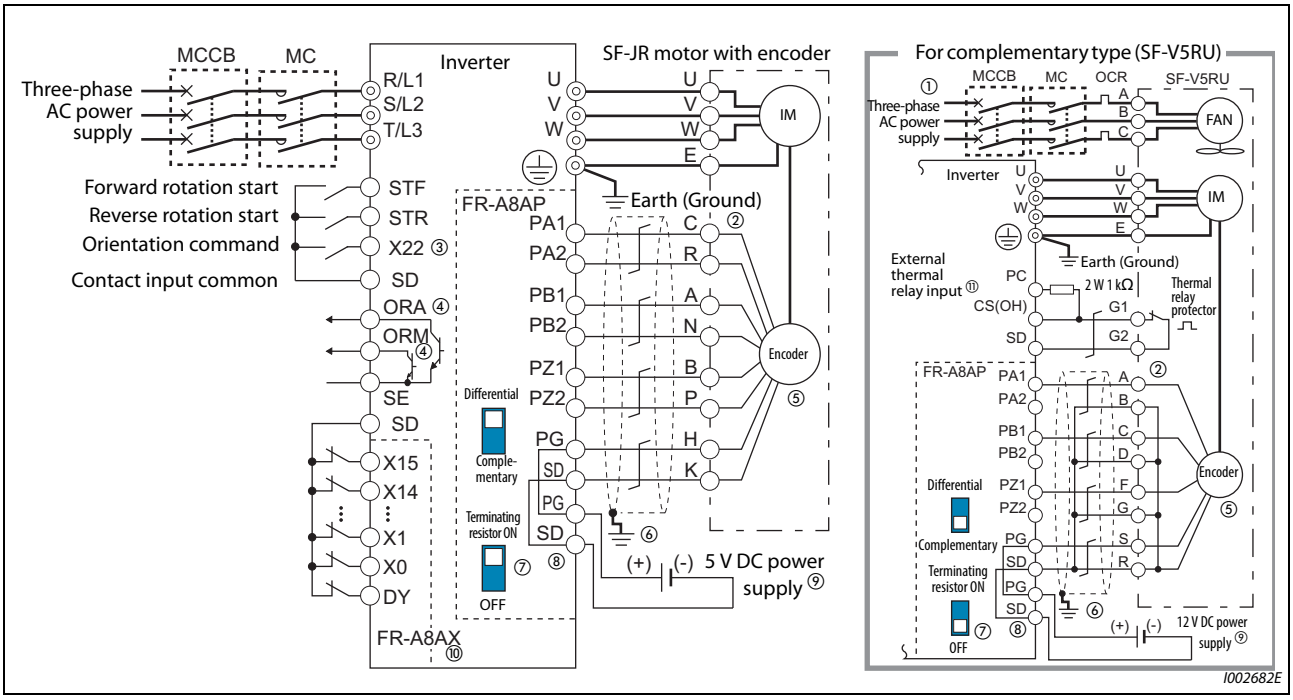


***Fig. 5-233:*** *Connection example*

① The power supply of the fan for a 7.5 kW or lower dedicated motor is single phase. (200 V/50 Hz, 200 to 230 V/60 Hz)

② The pin number differs according to the encoder used.

③ Use Pr. 178 to Pr. 189 (input terminal function selection) to assign the function to a terminal. (Refer to page 5-409.)

④ Use Pr. 190 to Pr. 196 (output terminal function selection) to assign the function to a terminal. (Refer to page 5-350.)

⑤ Connect the encoder so that there is no looseness between the motor and motor shaft. Speed ratio must be 1:1.

⑥ Connect the shield of the encoder cable to the enclosure using a tool such as a P-clip. (Refer to page 2-71.)

⑦ For the differential line driver, set the terminating resistor selection switch to the ON position (initial status) to use. (Refer to page 2-63.)
Note that the terminating resistor switch should be set to the OFF position when sharing the same encoder with another unit (NC, etc.) or when the terminating resistor is connected to another unit. For the complementary, set the switch to the OFF position.

⑧ For terminal compatibility of FR-JCBL, FR-V5CBL and FR-A8AP, refer to page 2-67.

⑨ A separate power supply of 5 V/12 V/15 V/24 V is necessary according to the encoder power specification. Make the voltage of the external power supply same as the encoder output voltage, and connect the external power supply between PG and SD. When performing encoder feedback control and vector control together, an encoder and power supply can be shared.

⑩ When a stop position command is input from outside, a plug-in option FR-A8AX is required. Refer to page 5-491 for the external stop position command.

⑪ Connect the recommended 2W1kΩ resistor between the terminal PC and OH. (Recommended product: MOS2C102J 2W1kΩ by KOA Corporation)
Insert the input line and the resistor to a 2-wire blade terminal, and connect the blade terminal to the terminal OH. (For the recommended 2-wire blade terminals, refer to page 2-44.)
Insulate the lead wire of the resistor, for example by applying a contraction tube, and shape the wires so that the resistor and its lead wire will not touch other cables. Caulk the lead wire securely together with the thermal protector input line using a 2-wire blade terminal. (Do not subject the lead wire's bottom area to an excessive pressure.)
To use a terminal as the terminal OH, assign the OH (external thermal O/L relay input) signal to an input terminal. (Set "7" in any of Pr.178 to Pr.189. For details, refer to the Instruction Manual (Detailed) of the inverter.)

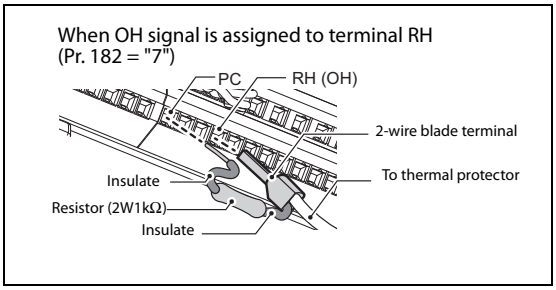


***Fig. 5-234:*** *Connection of the resistor*

### Setting

If the orientation command signal (X22) is turned ON during operation after the various parameters have been set, the speed will decelerate to the "orientation switchover speed". After the "orientation stop distance" is calculated, the speed will further decelerate, and the "orientation state" (servo lock) will be entered. The "orientation complete signal" (ORA) will be output when the "orientation complete width" is entered.

### Setting I/O signals

| Signal | Signal name | Description |
|---|---|---|
| X22 | Orientation command | Use a terminal to input the orientation signal that commands orientation.<br>For the X22 signal input, set "22" in any of Pr. 178 to Pr. 189 to assign the function. |
| ORA | Orientation complete | Output switches to Low if the orientation stop has made within the orientation complete width while the start and X22 signals are input.<br>For the ORA signal output, set "27 (positive logic)" or "127 (negative logic)" in any of Pr. 90 to Pr. 196. |
| ORM | Orientation fault | Output switches to Low if the orientation not stop has made within the orientation complete width while the start and X22 signals are input.<br>For the ORM signal output, set "28 (positive logic)" or "128 (negative logic)" in any of Pr. 190 to Pr. 196. |

***Tab. 5-204:*** *Setting I/O signals*

### Selecting stop position command (Pr. 350 "Stop position command selection")

- Select either to use the internal stop position command (Pr. 356 "Internal stop position command") or the external stop position command (16-bit data using the FR-A8AX).

| Pr. 350 setting | Stop position command source |
|---|---|
| 0 | Internal stop position command (Pr. 356: 0 to 16383) |
| 1 | External stop position command (FR-A8AX) 16-bit data |
| 9999 (Initial value) | Orientation control invalid |

***Tab. 5-205:*** *Settings for parameter 350*

- When the internal stop position command (Pr. 350 = "0") is selected, the Pr. 356 setting is used as the stop position.

- When the number of encoder pulses is 1024 pulses/r, one revolution (360°) of the encoder is divided by 4096 pulses so that the degree per pulse can be calculated as 360° / 4096 pulses = 0.0879°/pulse. Refer to the figure below. Stop position (address) is shown within parentheses.

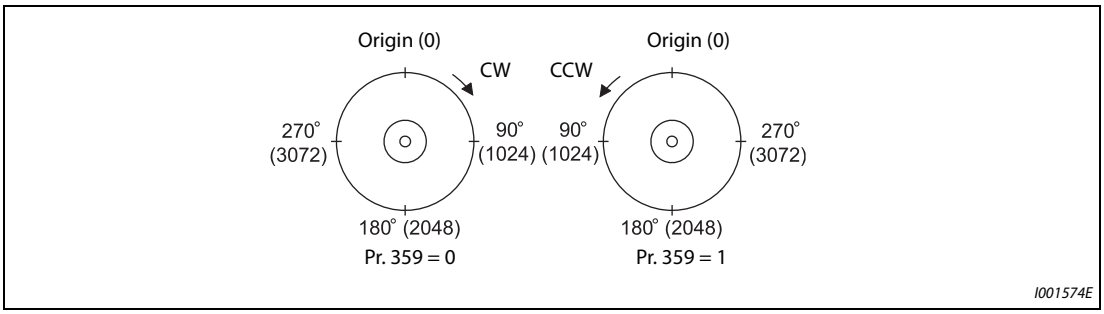


***Fig. 5-235:*** *Encoder addresses*

- When the external stop position command (Pr. 350 = "1") is selected while the FR-A8AX option is mounted, 16-bit data (binary input) is used to give the stop position.
- The value set in Pr. 360 "16-bit data selection" should be the divided value minus 1.

| Pr. 360 Setting | Description |
|---|---|
| 0 | External position command is invalid (speed command or torque command via the FR-A8AX) |
| 1 | Position command direct input<br>The 16-bit digital signal via the FR-A8AX is the direct stop position command.<br>**Example:**<br>When the Pr. 369 "Number of encoder pulses" setting is "1024", the stop position command from "0 to 4095" can be input using FR-A8AX, and the digital signal of "2048 (H800)" is input to stop the motor at a 180° position. |
| 2 to 127 | Set the stop position command by dividing up to 128 stop positions.<br>If the external stop command input is greater than the setting, the stop positions are the same as those in the maximum external stop command value.<br>**Example:**<br>When the number of stop positions is 90 (divided at intervals of 4°), 90 - 1 = 89. Hence, set "89". |

***Tab. 5-206:*** *Settings for parameter 360*

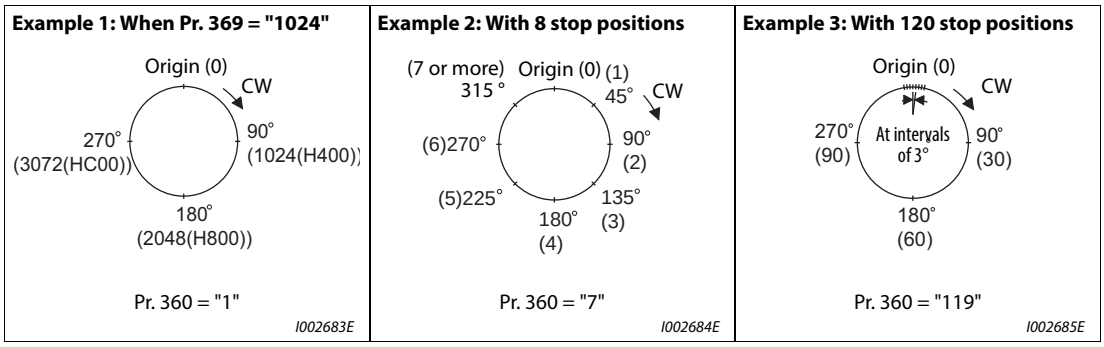

**NOTES**

Values in parentheses indicate binary data input from the terminals. Even if the position pulse monitor (Pr. 52 "Operation panel main monitor selection" = "19") is selected, the data monitored is not the number of stop positions but is 0 to 65535 pulses.

FR-A8AX parameters (Pr. 300 to Pr. 305) are invalid (Valid when Pr. 360 = "0".)

Terminal DY (data read timing input signal) becomes invalid during vector control. (The position data is downloaded at the start of orientation.)

Internal stop position command is given when no option is mounted or Pr. 360 = "0" even if "1" (external stop position command) is set in Pr. 350.

- Relationship between stop position command and 16-bit data

| Pr. 350 "Stop position command selection" | Pr. 360 "16-bit data selection" | Operation status | | |
|---|---|---|---|---|
| | | Stop position command | 16-bit data (FR-A8AX) | Speed command |
| 0: internal | 0: speed command | Internal (Pr. 356) | Speed command | 16-bit data |
| | 1, 2 to 127: position command | Internal (Pr. 356) | Invalid | External command (or PU) |
| 1: external | 0: speed command | Internal (Pr. 356) | Speed command | 16-bit data |
| | 1, 2 to 127: position command | External (Internal when the FR-A8AX is not mounted (Pr. 356)) | Position command | External command (or PU) |

***Tab. 5-207:*** *Relation between parameters 350 and 360*

**Pr. 361 "Position shift" (initial value "0")**

- The stop position is a position obtained by adding the setting of Pr. 361 to the position command.
- Position shift function
  Shift the home position using a compensation value without changing the home position of the position detector (encoder).

**NOTE**

When orientation control is valid using Pr. 350 "Stop position command selection" with the FR-A8AP (option) mounted, the rotation direction of the encoder is displayed on the rotation direction display of the PU (FR-DU08/FR-PU07).
Make settings so that FWD is displayed at turn ON of the STF signal and REV is displayed at turn ON of the STR signal.

### Monitor display change

| Monitor | REMARKS |
|---|---|
| Position pulse monitor | When "19" is set in Pr. 52 "Operation panel main monitor selection", the position pulse monitor is displayed instead of the output voltage monitor of the PU.<br>(Displayed only when the FR-A8AP (option) is mounted.) |
| Orientation status ① | When "22" is set in Pr. 52, the orientation status is displayed instead of the output voltage monitor of the PU. (Displayed only when the FR-A8AP (option) is mounted.)<br>0: Other than orientation operation or orientation speed is not reached<br>1: Orientation speed is reached<br>2: Creep speed is reached<br>3: Position loop is reached<br>4: Orientation complete<br>5: Orientation fault (pulse stop)<br>6: Orientation fault (orientation limit)<br>7: Orientation fault (recheck)<br>8: Continuous multi-point orientation |

***Tab. 5-208:*** *Monitor display change*

① Invalid during vector control. ("0" is always displayed.)

### Pr. 357 "Orientation in-position zone" (initial value "5")

- The in-position width for orientation stop can be set.
  The initial value of Pr. 357 is "5". To change the Δθ value, make fine adjustments by changing in increments of ±10.
- If the position detection value from the encoder enters ±Δθ during orientation stop, the Orientation complete signal (ORA) will be output.

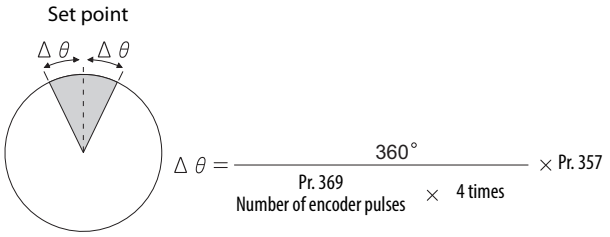


***Fig. 5-236:*** *In-position zone*

**Orientation from the running status**
**(under V/F control, Advanced magnetic flux vector control)**

① When the orientation command (X22) turns on, the motor speed decreases to the Pr. 351 "Orientation speed". (Pr. 351 initial value: 2Hz)

② After the speed reaches the orientation speed, the speed further decreases to the Pr. 352 "Creep speed" as soon as the current position pulse reaches the Pr. 353 "Creep switchover position". (Pr. 352 is initially set to "0.5 Hz", Pr. 353 is initially set to "511")

③ Moreover, as soon as the current position pulse reaches the Pr. 354 "Position loop switchover position", control is changed to the position loop. (Pr. 354 is initially set to "96")

④ After the motor moves into the position loop, the motor decelerates and stops by the DC injection brake as soon as the current position pulse reaches the Pr. 355 "DC injection brake start position". (Pr. 355 is initially set to "5")

⑤ When the motor stops in Pr. 357 "Orientation in-position zone", the orientation complete (ORA) signal is output after Pr. 363 "Completion signal output delay time". If the motor does not stop within the in-position width because of external force, etc., the ORA signal turns OFF after the time set in Pr. 363. (Pr. 357 is initially set to "5", Pr. 363 is initially set to "0.5 s")

⑥ If the orientation is not completed continuously in Pr. 365 "Orientation limit" after passing the creep switchover position, the orientation fault signal (ORM) is output.

⑦ After the orientation start, if the motor is stopped by external force, etc. before reaching the in-position width and therefore the ORA signal has not been output, the ORM signal is output after the Pr. 364 "Encoder stop check time". If the motor is moved out of the in-position width by external force, etc. after the ORA signal has been output once, the ORA signal turns OFF after the set time in Pr. 363. If the orientation is not completed within the time set in Pr. 364, the ORM signal is output.

⑧ If the ORA and ORM signals have been output once, but the start signal (STF or STR) is turned OFF while the X22 signal is ON, the ORA or ORM signal will be output again after Pr. 366 "Recheck time".

⑨ The ORA and ORM signals cannot be output while the X22 signal is OFF.

**NOTES**

When the orientation command turns OFF while the start signal is ON, the speed accelerates to the command speed.

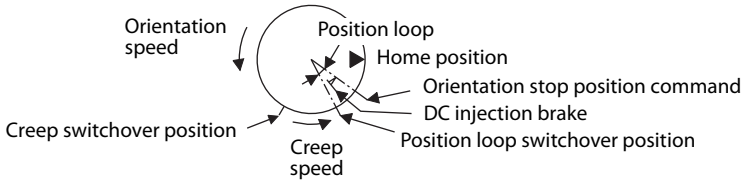


If hunting of the motor shaft occurs during orientation stop, set a larger value in Pr. 354 or a smaller value in Pr. 352 to prevent it.

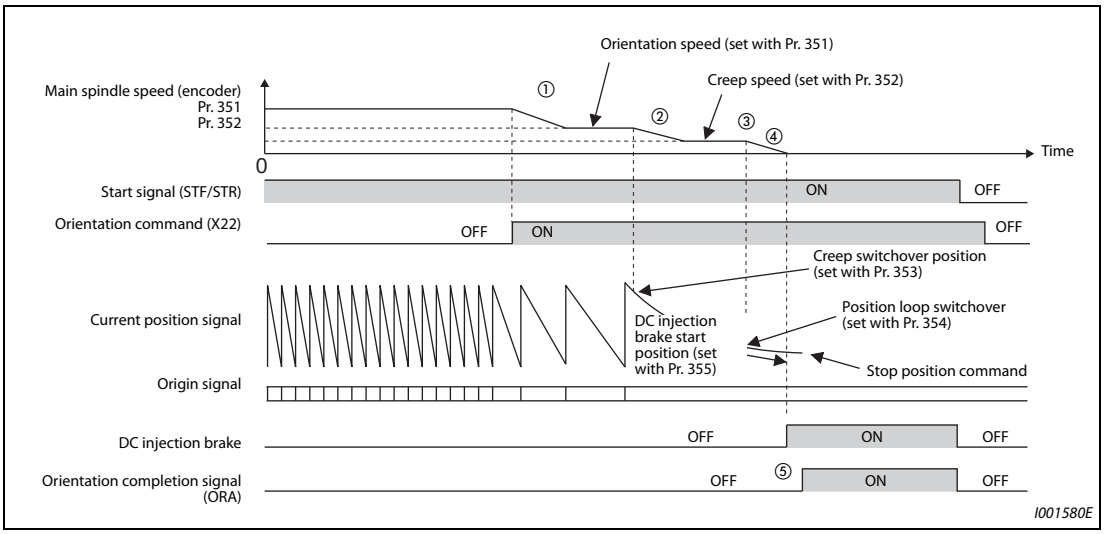


***Fig. 5-237:*** *Action time chart for orientation during running*

**Orientation from the stop status (V/F control, Advanced magnetic flux vector control)**

- Turning ON the start signal after turning ON the orientation command (X22) will increase the motor speed to the Pr. 351 "Orientation speed", and then orientation operation will be performed with the same operation as for "orientation from the running status".
- Note that the DC injection brake operates without increasing to the orientation speed if the position signal is within the DC injection brake start position.

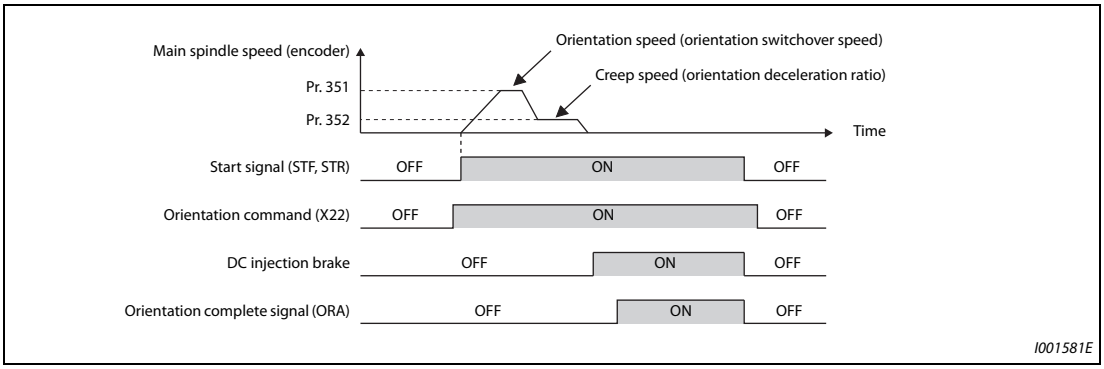


***Fig. 5-238:*** *Action time chart for orientation from stop*

**Continuous multi-point orientation (V/F control, Advanced magnetic flux vector control)**

- Orientation command and orientation with STF/STR ON. (Orientation in servo-in status)

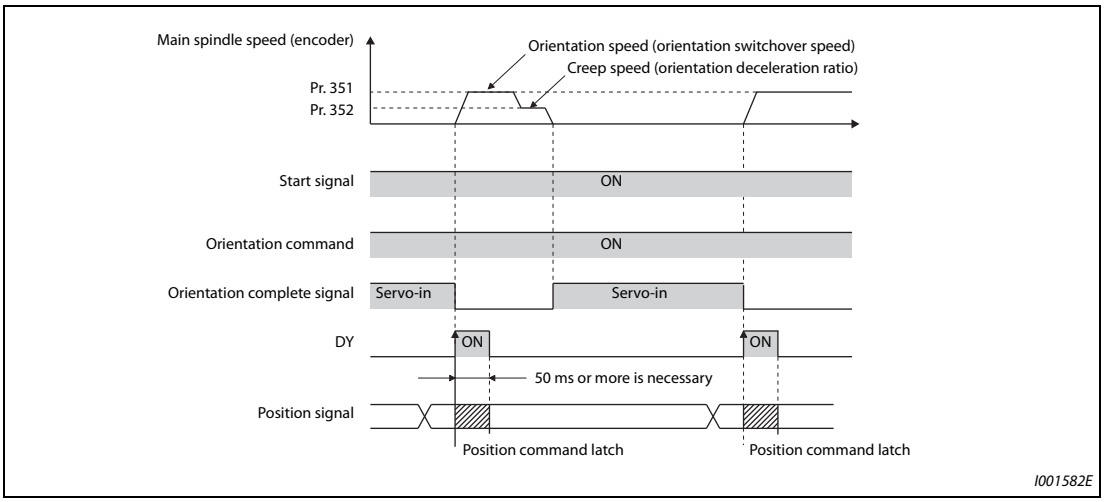


***Fig. 5-239:*** *Continuous multi-point orientation*

- The position data is read at the rising edge of DY. (For the details, refer to the Instruction Manual of FR-A8AX).
- When the position signal is within the creep switchover position, the speed starts up to the creep speed not to the orientation speed.
- When the position signal is outside the creep switchover position, the speed starts up to the orientation speed.
- The DC injection brake operates if the position signal is within the DC injection brake start position.
- 16-bit data with the FR-A8AX is valid only when the DY signal is ON.

**NOTES**

Couple the encoder with the motor shaft or with the shaft that stops the main shaft at the specified position. Couple it with the speed ratio of 1:1 and without any mechanical looseness.

The DC injection brake operates at orientation stop. Release the DC injection brake as soon as possible (within several seconds), as continuous operation of the DC injection brake will cause the motor to overheat, leading to burnout.

Because the servo lock function is not available after orientation stop, provide a holding mechanism, such as a mechanical brake or knock pin, when secure holding of the main shaft is required.

To ensure correct positioning, the encoder must be set in the proper rotation direction, and the A and B phases must be connected correctly.

If the pulse signal from the encoder stops due to encoder signal loss, etc. during orientation, the Orientation fault (ORM) signal may be output.

When performing orientation control, enable the DC injection brake. (Refer to page 5-640.) When the DC injection brake is disabled, orientation operation cannot be completed.

When orientation control is performed, the DC injection brake operates regardless of the External DC injection brake operation start (X13) signal even when Pr. 11 "DC injection brake operation time" = "8888" (DC injection brake external selection).

**To terminate orientation, the start signal (STF or STR) must be first switched OFF, and then the X22 signal must be switched OFF.** As soon as this X22 signal is switched OFF, orientation control ends. (Depending on the Pr. 358 "Servo torque selection" setting, the orientation status continues if the X22 signal remains ON even if the DC injection brake is released by turning OFF the start signal. Because of this, the orientation status on the monitor does not show "0".

When the retry function of Pr. 358 "Servo torque selection" is selected, the retry operation is performed three times including the first orientation.

When performing orientation control, properly set Pr. 350 "Stop position command selection" and Pr. 360 "16-bit data selection" (external position command selection). If the values are set incorrect, proper orientation control will not be performed.

When orientation control is performed, PID control is disabled.

**Servo torque selection (Pr. 358) (V/F control, Advanced magnetic flux vector control)**

| Function and description | | Operation for each Pr. 358 setting | | | | | | | | | | | | | | REMARKS |
|---|---|---|---|---|---|---|---|---|---|---|---|---|---|---|---|---|
| | | 0 | 1 | 2 | 3 | 4 | 5 | 6 | 7 | 8 | 9 | 10 | 11 | 12 | 13 | |
| ❶ | Servo torque function until output of the orientation complete signal (ORA) | × | ○ | ○ | ○ | ○ | × | ○ | × | ○ | × | ○ | × | × | ○ | ○: With servo torque function<br>×: Without servo torque function |
| ❷ | Retry function | × | × | × | × | × | × | × | ○ | × | × | × | ○ | × | × | ○: With retry function<br>×: Without retry function |
| ❸ | Output frequency compensation when the motor stops outside the in-position zone | × | × | ○ | ○ | × | ○ | ○ | × | × | × | × | × | ○ | ○ | ○: With frequency compensation<br>×: Without frequency compensation |
| ❹ | DC injection brake and servo torque when the motor exits the in-position zone after output of the orientation complete signal (ORA) | ○ | × | × | × | × | ○ | ○ | ○ | ○ | ○ | ○ | ○ | ○ | ○ | ○: DC injection brake enabled<br>×: Servo torque enabled |
| ❺ | End switch for the DC injection brake and orientation complete signal (ORA) | ○ | ○ | ○ | × | × | ○ | ○ | ○ | ○ | × | × | × | × | × | ○: When the start signal (STF, STR) or orientation command is turned OFF<br>×: When the orientation command is turned OFF |
| ❻ | Complete signal when the motor exits the in-position zone after output of the orientation complete signal (ORA) | ○ | ○ | ○ | ○ | ○ | × | × | × | × | × | × | × | × | × | ○: Turns OFF the complete signal when the motor exits the in-position zone<br>×: Complete signal remains ON even if the motor exits the in-position zone (orientation fault signal (ORM) is not output) |

***Tab. 5-209:*** *Settings of parameter 358*

**NOTES**

When the orientation command turns OFF while the start signal is ON, the motor accelerates to the command speed.

When the motor shaft stops outside of the set setting range of the stop position, the motor shaft is returned to the stop position by the servo torque function (if enough torque is generated).

❶ Servo torque function until output of the orientation complete signal
Select whether or not servo torque is available using Pr. 358 "Servo torque selection". Servo torque is not generated if the current position pulse is in between the orientation stop position and DC injection brake start position. The shaft is fixed using the DC injection brake, and when the motor exits the width by external force, etc., the servo torque is generated to move the motor back within the width. Once the orientation complete (ORA) signal is output, the operation is performed as described in ❹.

❷ Retry function
Select retry function using Pr. 358. Note that the retry function cannot be used together with the servo torque function. If the motor shaft does not stop within the in-position zone when the motor stop is checked, orientation operation is performed again by the retry function. This retry function is performed three times including the first orientation.The maximum retry number is three. (The orientation fault (ORM) signal is not output during retry operation.)

❸ Frequency compensation when the motor stops outside the orientation complete width
When the motor stops before entering the in-position width due to external force, etc., the output frequency is increased to move the shaft to the orientation stop position. The output frequency is gradually increased to the Pr. 352 "Creep speed". This function cannot be used with the retry function.

❹ DC injection brake and servo torque selection when the position pulse exits the in-position zone after output of the ORA signal
If the motor exits the in-position width, select the setting either to fix the shaft with the DC injection brake or by returning the motor to the orientation stop position with the servo torque.

❺ End switch for the DC injection brake and orientation complete signal (ORA)
When ending the orientation operation, first turn OFF the start signal (STF or STR), and then turn OFF the X22 signal. At this time, select when to turn OFF the ORA signal from either the time the start signal is turned OFF or the time the orientation command signal is turned OFF.

❻ Complete signal when the motor exits the in-position zone after output of the orientation complete signal (ORA)
Select to turn OFF the ORA signal or to keep the ORA signal ON (ORM signal is not output) when the motor exits the in-position width.

**Position loop gain (Pr. 362) (V/F control, Advanced magnetic flux vector control)**

- When the servo torque function is selected using Pr. 358 "Servo torque selection", the output frequency for generating servo torque gradually increases to the Pr. 352 "Creep speed" according to the slope set in Pr. 362 "Orientation position loop gain".
- Although the operation becomes faster when the value is increased, a machine may hunt, etc.

**Description of orientation operation (Vector control)**

- Setting the rotation direction (Pr. 393 "Orientation selection")

| Pr. 393 setting | Rotation direction | Remarks |
|---|---|---|
| 0 (initial value) | Pre-orientation | Orientation is executed from the current rotation direction. |
| 1 | Forward rotation orientation | Orientation is executed from the forward rotation direction. (If the motor is running in reverse, orientation is executed from the forward rotation direction after deceleration.) |
| 2 | Reverse rotation orientation | Orientation is executed from the reverse rotation direction. (If the motor is running forward, orientation is executed from the reverse rotation direction after deceleration.) |

***Tab. 5-210:*** *Setting of parameter 393*

**Orientation from the current rotation direction (Pr. 393 = "0 (initial value)") (Vector control)**

- When the orientation command (X22) is input, the motor speed will decelerate from the running speed to Pr. 351 "Orientation speed." At the same time, the orientation stop position command will be read in. (The stop position command is determined by the setting of Pr. 350 "Stop position command selection" and Pr. 360 "16-bit data selection". Refer to the chart below.)

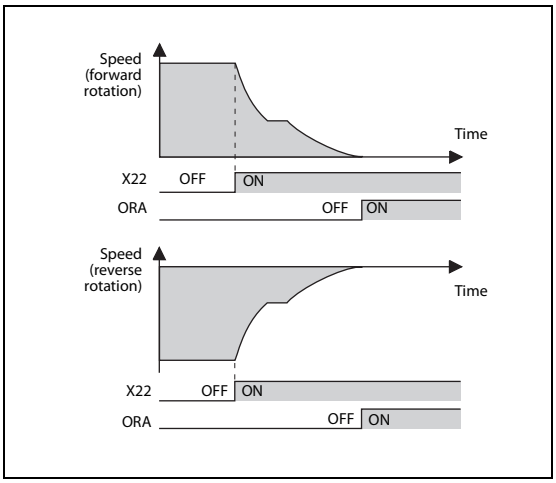


***Fig. 5-240:***
*Orientation from the current rotation direction*

I001583E, I001584E

- When the orientation switchover speed is reached, the encoder Z phase pulse will be confirmed, and the control will change from speed control to position control (Pr. 362 "Orientation position loop gain").
- The distance to the orientation stop position is calculated at switching of the control, and the motor decelerates to a stop with a set deceleration pattern (Pr. 399 "Orientation deceleration ratio") and enters the orientation (servo lock) state.
- Once in the Pr. 357 "Orientation in-position zone", the orientation complete (ORA) signal is output.
- The home position can be moved using Pr. 361 "Position shift".

**WARNING:**

***If the X22 is turned OFF while the start signal is input, the motor will accelerate toward the speed of the current speed command. Therefore, to stop, turn the forward rotation (reverse rotation) signal OFF.***

**Orientation from the forward rotation direction (Pr. 393 = "1") (Vector control)**

- This method is used to improve the stopping precision and maintain the mechanical precision when the backlash is large.
- If the motor is running in the forward rotation direction, it will make an orientation stop with the same method as "orientation from the current rotation direction".
- If the motor is running in reverse, it will decelerate, change to the forward rotation direction, and then orientation stop will be executed.

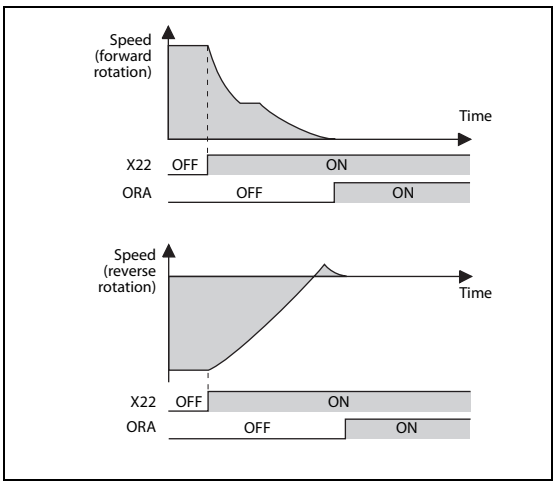


***Fig. 5-241:***
*Orientation from the forward rotation direction*

*I001585E, I001586E*

**Orientation from the reverse rotation direction (Pr. 393 = "2") (Vector control)**

- If the motor is running in the reverse rotation direction, it will make an orientation stop with the same method as "orientation from the current rotation direction".
- If the motor is running in forward, it will decelerate, change to the reverse rotation direction, and then orientation stop will be executed.

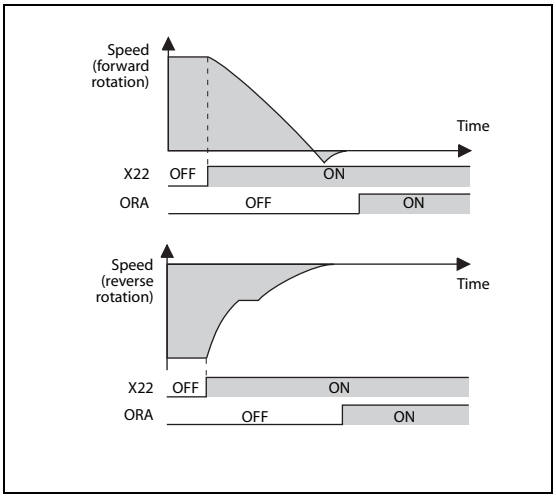


***Fig. 5-242:***
*Orientation from the reverse rotation direction*

*I001587E, I001588E*

**NOTES**

Couple the encoder with the motor shaft that stops the shaft at the specified position. Couple it with the speed ratio of 1:1 and without any mechanical looseness.

To ensure correct positioning, the encoder must be set in the proper rotation direction, and the A and B phases must be connected correctly.

If the pulse signal from the encoder stops due to encoder signal loss, etc. during orientation, orientation may not be completed.

To terminate orientation, the start signal (STF or STR) must be first switched OFF, and then the orientation signal (X22) must be switched OFF. As soon as this orientation signal is switched OFF, orientation control ends.

When performing orientation control, properly set Pr. 350 "Stop position command selection" and Pr. 360 "16-bit data selection".
If the values set are incorrect, proper orientation control will not be performed.

When orientation control is performed, PID control is disabled.

If Signal loss detection(E.ECT) is displayed when the X22 signal is ON, causing the inverter to trip, check for a break in the cable of the Z phase of the encoder.

**Servo rigidity adjustment (Pr. 362, Pr. 396 to Pr. 398) (Vector control)**

To increase the servo rigidity ① during orientation stop using Pr. 396 "Orientation speed gain (P term)" or Pr. 397 "Orientation speed integral time", adjust with the following procedures.

① Increase the Pr. 362 "Orientation position loop gain" value to the extent that rocking does not occur during orientation stop.

② Increase Pr. 396 and Pr. 397 at the same rate.
Normally, adjust Pr. 396 in the range from 10 to 100, and Pr. 397 from 0.1 to 1.0 s.
(Note that these do not need to be set to the same rate.)

**Example** ▽

When the Pr. 396 value is multiplied by 1.2, divide the Pr. 397 value by 1.2.
If vibration occurs during orientation stop, the scale cannot be raised any higher.

△

③ Pr. 398 "Orientation speed gain (D term)" is the lag/advance compensation gain.
The limit cycle ② can be prevented by increasing the value, and operation can be stopped stably.
However, the torque will decrease in relation to the position deviation, and the motor will stop with deviation.

**NOTE**

Application of lag/advance control and PI control
PI control can be applied by setting Pr. 398 to 0. Normally, use the lag/advance control. PI control should be used when using a machine with a high spindle static friction torque and requires a stop position accuracy.

① Servo rigidity: This is the response when a position control loop is configured.
When the servo rigidity is raised, the holding force will increase and operation will stabilize, but vibration will more easily occur.
When the servo rigidity is lowered, the holding force will decrease, and the settling time will increase.

② Limit cycle: This is a phenomenon that generates ± continuous vibration centering on the target position.

③ Rocking: Movement in which return occurs when the stopping position is exceeded.

**Pr. 399 "Orientation deceleration ratio" (initial value: 20) (Vector control)**

Make adjustments, as shown below, according to the orientation status. (Make adjustments in the order of ①, ②, and ③.)
Normally, adjust Pr. 362 "Orientation position loop gain" in the range from 5 to 20, and Pr. 399 "Orientation deceleration ratio" from 5 to 50.

| Condition | Adjustment procedure |
|---|---|
| Rocking occurs during stopping | ① Decrease the Pr. 399 setting.<br>② Decrease the Pr. 362 setting.<br>③ Increase the Pr. 396 and Pr. 397 settings. |
| The orientation time is long. | ① Increase the Pr. 399 setting.<br>② Increase the Pr. 362 setting. |
| Hunting occurs during stopping | ① Decrease the Pr. 362 setting.<br>② Decrease the Pr. 396 setting and increase the Pr. 397 setting. |
| Low servo rigidity during stopping | ① Increase the Pr. 396 setting and decrease the Pr. 397 setting.<br>② Increase the Pr. 362 setting. |

***Tab. 5-211:*** *Adjustment of parameters*

**NOTE**

Orientation stop operation will fail, causing an excessive position error, or if the motor performs forward/reverse reciprocation operation ⟳, review the settings of Pr. 393 "Orientation selection" (on page 5-488) and Pr. 359 "Encoder rotation direction" (on page 5-487).

**Pr. 351 "Orientation speed" (initial value: 2 Hz) (Vector control)**

Set the speed when switching between the speed control mode and the position control mode is performed under orientation operation.
Decreasing the set speed enables stable orientation stop. Note that the orientation time will increase.

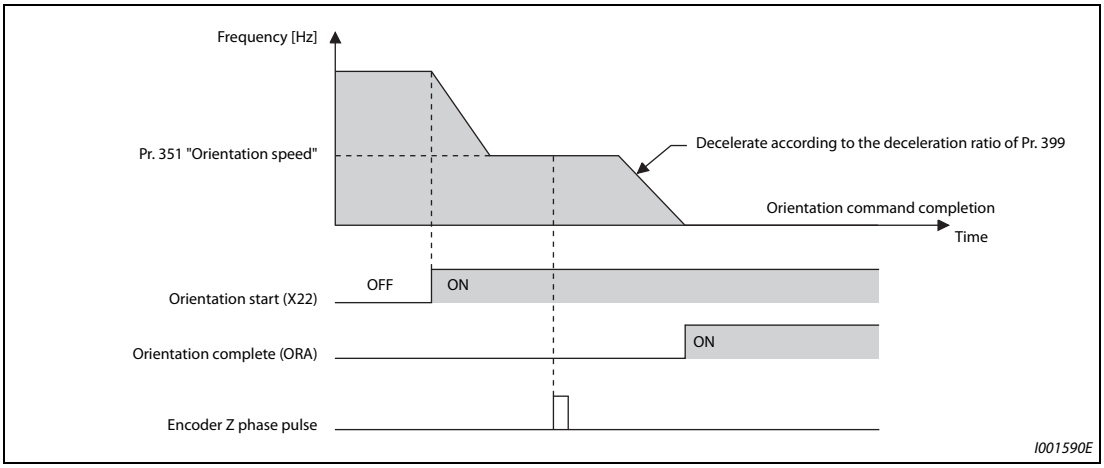


***Fig. 5-243:*** *Orientation speed*

**NOTE**

When "19" is set in Pr. 52 "Operation panel main monitor selection", the position pulse monitor is displayed instead of the output voltage monitor on the PU.

## 5.14.9 PID control

Process control such as flow rate, air volume or pressure are possible on the inverter.

A feedback system can be configured and PID control can be performed using the terminal 2 input signal or parameter setting value as the set point, and the terminal 4 input signal as the feedback value.

| Pr. | Name | Initial value | Setting range | Description |
|---|---|---|---|---|
| 127<br>A612 | PID control automatic switchover frequency | 9999 | 0 to 590 Hz | Set the value at which control is automatically switched to PID control. |
| | | | 9999 | Without PID control automatic switchover function |
| 128<br>A610 | PID action selection | 0 | 0, 10, 11, 20, 21, 50, 51, 60, 61, 70, 71, 80, 81, 90, 91, 100, 101, 1000, 1001, 1010, 1011, 2000, 2001, 2010, 2011 | Select how to input the deviation value, measured value and set point, and forward and reverse action. |
| | | | 40 to 43 | Refer to page 5-530 |
| 129<br>A613 | PID proportional band | 100% | 0.1 to 1000% | If a narrow proportional band is set (small parameter setting value), the manipulated amount changes considerably by slight changes in the measured value. As a result, response improves as the proportional band becomes narrower, though stability worsens as shown by the occurrence of hunting. Gain Kp=1/proportional band |
| | | | 9999 | Without proportional band |
| 130<br>A614 | PID integral time | 1 s | 0.1 to 3600 s | With deviation step input, this is the time (Ti) used for obtaining the same manipulated amount as proportional band (P) by only integral (I) action. Arrival to the set point becomes quicker the shorter an integral time is set, though hunting is more likely to occur. |
| | | | 9999 | Without integral control |
| 131<br>A601 | PID upper limit | 9999 | 0 to 100% | Sets the upper limit. The FUP signal is output when the feedback value exceeds this setting. The maximum input (20 mA/5 V/10 V) of the measured value (terminal 4) is equivalent to 100%. |
| | | | 9999 | No function |
| 132<br>A602 | PID lower limit | 9999 | 0 to 100% | Set the lower limit. The FDN signal is output when the measured value falls below the setting range. The maximum input (20 mA/5 V/10 V) of the measured value (terminal 4) is equivalent to 100%. |
| | | | 9999 | No function |
| 133<br>A611 | PID action set point | 9999 | 0 to 100% | Set the set point during PID control. |
| | | | 9999 | Set point set by Pr. 128. |
| 134<br>A615 | PID differential time | 9999 | 0.01 to 10 s | With deviation ramp input, this is the time (Td) used for obtaining the manipulated amount only by proportional action (P). Response to changes in deviation increase greatly as the differential time increases. |
| | | | 9999 | Without differential control |
| 553<br>A603 | PID deviation limit | 9999 | 0 to 100% | The Y48 signal is output when the absolute value of the deviation exceeds the deviation limit value. |
| | | | 9999 | No function |
| 554<br>A604 | PID signal operation selection | 0 | 0 to 3, 10 to 13 | The action when the upper or lower limit for a measured value input is detected or when a limit for the deviation is detected can be selected. The operation for PID output suspension function can be selected. |

| Pr. | Name | Initial value | Setting range | Description | |
|---|---|---|---|---|---|
| 575<br>A621 | Output interruption detection time | 1 s | 0 to 3600 s | If the status where the output frequency after PID calculation is less than the Pr. 576 setting is continuously the Pr. 575 set time or more, inverter running is suspended. | |
| | | | 9999 | Without output interruption function | |
| 576<br>A622 | Output interruption detection level | 0 Hz | 0 to 590 Hz | Set the frequency at which output interruption is performed. | |
| 577<br>A623 | Output interruption cancel level | 1000% | 900 to 1100% | Level at which the PID output suspension function is released.<br>Set "Pr. 577 – 1000%". | |
| 609<br>A624 | PID set point/deviation input selection | 2 | 1 | Input of set point, deviation value from terminal 1 | |
| | | | 2 | Input of set point, deviation value from terminal 2 | |
| | | | 3 | Input of set point, deviation value from terminal 4 | |
| | | | 4 | Input of set point, deviation value via CC-Link communication | |
| | | | 5 | Input of set point, deviation value by PLC function | |
| 610<br>A625 | PID measured value input selection | 3 | 1 | Input of measured value from terminal 1 | |
| | | | 2 | Input of measured value from terminal 2 | |
| | | | 3 | Input of measured value from terminal 4 | |
| | | | 4 | Input of measured value via CC-Link communication | |
| | | | 5 | Input of measured value by sequence function | |
| 753<br>A650 | Second PID action selection | 0 | 0, 10, 11, 20, 21, 50, 51, 60, 61, 70, 71, 80, 81, 90, 91, 100, 101, 1000, 1001, 1010, 1011, 2000, 2001, 2010, 2011 | Refer to Pr. 128. | Set the second PID control.<br>For how to enable the second PID control, refer to page 5-529. |
| 754<br>A652 | Second PID control automatic switchover frequency | 9999 | 0 to 600 Hz, 9999 | Refer to Pr. 127. | |
| 755<br>A651 | Second PID action set point | 9999 | 0 to 100%, 9999 | Refer to Pr. 133. | |
| 756<br>A653 | Second PID proportional band | 100 | 0.1 to 1000%, 9999 | Refer to Pr. 129. | |
| 757<br>A654 | Second PID integral time | 1 s | 0.1 to 3600 s, 9999 | Refer to Pr. 130. | |
| 758<br>A655 | Second PID differential time | 9999 | 0.01 to 10 s, 9999 | Refer to Pr. 134. | |
| 1140<br>A664 | Second PID set point/ deviation input selection | 2 | 1 to 5 | Refer to Pr. 609. | |
| 1141<br>A665 | Second PID measured value input selection | 3 | 1 to 5 | Refer to Pr. 610. | |
| 1143<br>A641 | Second PID upper limit | 9999 | 0 to 100%, 9999 | Refer to Pr. 131. | |
| 1144<br>A642 | Second PID lower limit | 9999 | 0 to 100%, 9999 | Refer to Pr. 132. | |
| 1145<br>A643 | Second PID deviation limit | 9999 | 0 to 100%, 9999 | Refer to Pr. 553.<br>(Y205 signal is output.) | |
| 1146<br>A644 | Second PID signal operation selection | 0 | 0 to 3, 10 to 13 | Refer to Pr. 554. | |
| 1147<br>A661 | Second output interruption detection time | 1 s | 0 to 3600 s, 9999 | Refer to Pr. 575. | |
| 1148<br>A662 | Second output interruption detection level | 0 Hz | 0 to 600 Hz | Refer to Pr. 576. | |
| 1149<br>A663 | Second output interruption cancel level | 1000% | 900 to 1100% | Refer to Pr. 577. | |

### Basic configuration of PID control

Pr. 128 = "10, 11" (deviation value signal input)

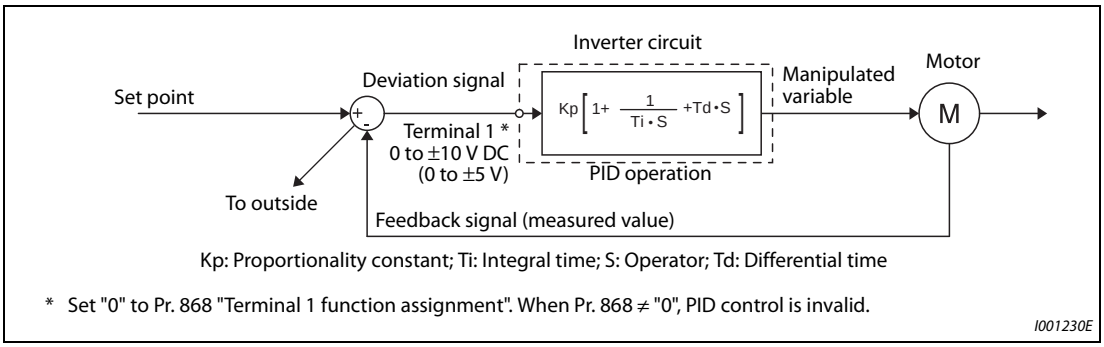


***Fig. 5-244:*** *System configuration when Pr. 128 = 10, 11 (using an external (PID) controller)*

● Pr. 128 = "20, 21" (measured value input)

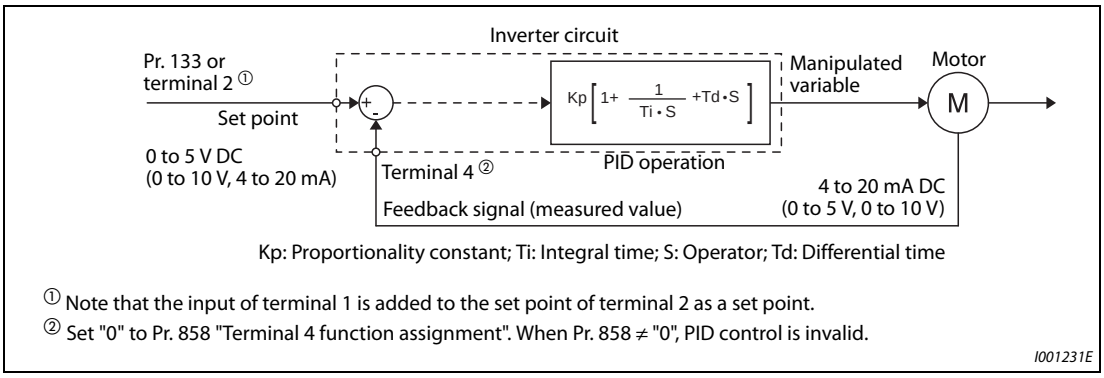


***Fig. 5-245:*** *System configuration when Pr. 128 = 20 or 21 (set/feedback value at the inverter)*

### PID action outline

● PI action

PI action is a combination of proportional action (P) and integral action (I), and applies a manipulated amount according to the size of the deviation and transition or changes over time.

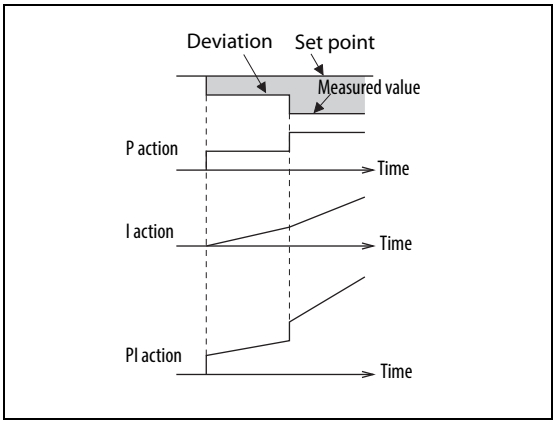


***Fig. 5-246:***
*Operation example for stepped changes of measured value*

**NOTE** PI action is the result of P and I actions being added together.

● PD action

PD action is a combination of proportional action (P) and differential action (D), and applies a manipulated amount according to the speed of the deviation to improve excessive characteristics.

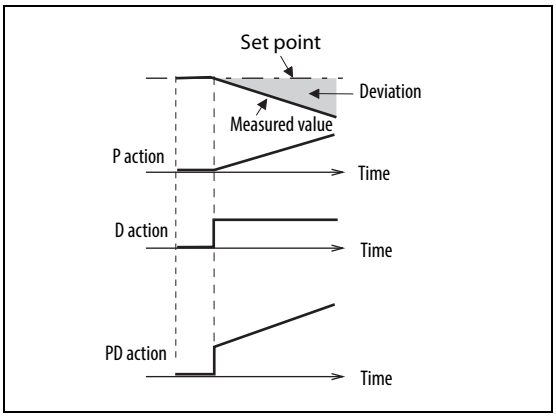


***Fig. 5-247:***
*Operation example for proportional changes of measured value*

**NOTE** PD action is the result of P and D actions being added together.

● PID action

PID action is a combination of PI and PD action, which enables control that incorporates the respective strengths of these actions.

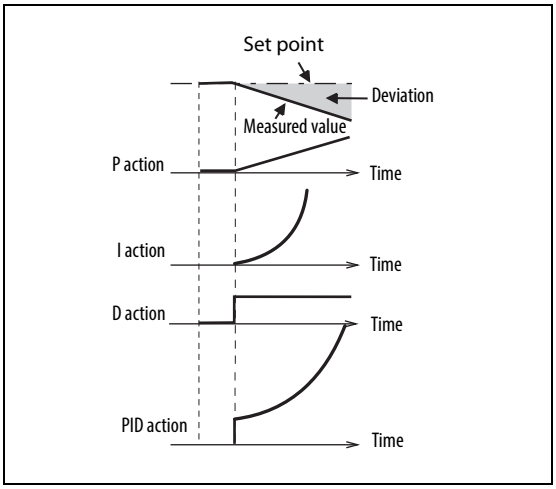


***Fig. 5-248:***
*Operation example for proportional changes of measured value*

**NOTE** PID action is the result of all P, I and D actions being added together.

● Reverse action

When deviation X = (set point - measured value) is a plus value, the manipulated amount (output frequency) is increased, and when the deviation is a minus value, the manipulated amount is decreased.

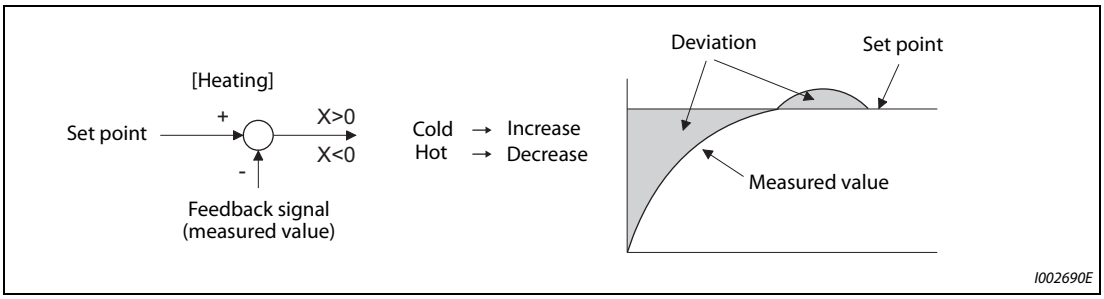


***Fig. 5-249:*** *Heating*

● Forward action

When deviation X = (set point - measured value) is a minus value, the manipulated amount (output frequency) is increased, and when the deviation is a plus value, the manipulated amount is decreased.

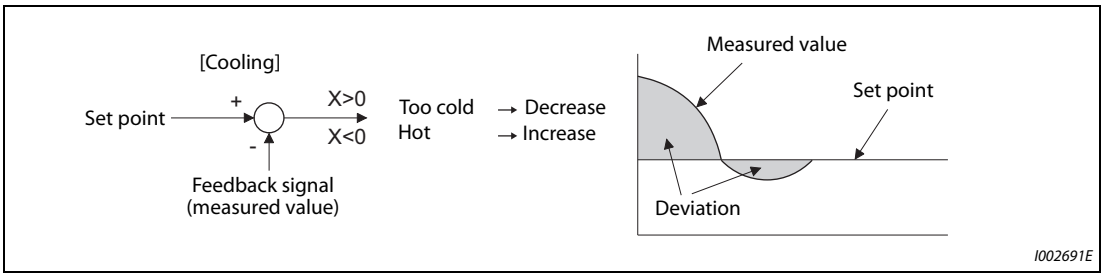


***Fig. 5-250:*** *Cooling*

Relationship between deviation and manipulated amount (output frequency)

| PID action setting | Deviation | |
|---|---|---|
| | Plus | Minus |
| Reverse action | ↗ | ↘ |
| Forward action | ↘ | ↗ |

***Tab. 5-212:*** *Relationships between deviation and manipulated variable*

**Connection diagram**

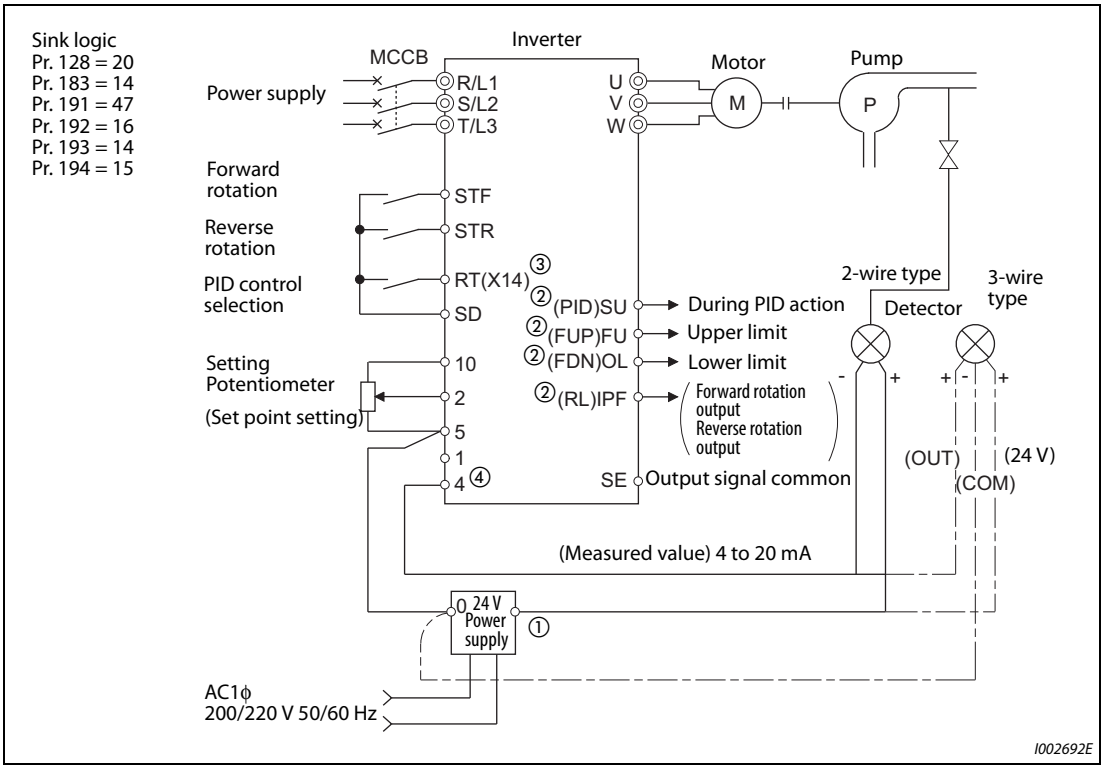


***Fig. 5-251:*** *Connection diagram in sink logic*

① Prepare a power supply matched to the power supply specification of the detector.

② The output signal terminal to be used differs according to the Pr. 190 to Pr. 196 (output terminal function selection) setting.

③ The input signal terminal to be used differs according to the Pr. 178 to Pr. 189 (input terminal function selection) setting.

④ The AU signal need not be input.

**Selection of deviation value, measured value and set point input method, and PID action method (Pr. 128, Pr. 609, Pr. 610)**

- Using Pr. 128, select the input method for the PID set point, measured value detected by the meter, and externally calculated deviation. Also, select forward or reverse action.
- Switch the power voltage/current specifications of terminals 2 and 4 by Pr. 73 "Analog input selection" or Pr. 267 "Terminal 4 input selection" to match the specification of the input device. After changing the Pr. 73 and Pr. 267 settings, check the voltage/current input selection switch. Incorrect setting may cause a fault, failure or malfunction. (Refer to page page 5-376 for the setting.)

| Pr. 128 setting | Pr. 609 Pr. 610 | PID action | Set point input | Measured value input | Deviation input |
|---|---|---|---|---|---|
| 0 | Invalid | PID invalid | — | — | — |
| 10 | | Reverse action | — | — | Terminal 1 |
| 11 | | Forward action | | | |
| 20 | | Reverse action | Terminal 2 or Pr. 133 ① | Terminal 4 | — |
| 21 | | Forward action | | | |
| 40 to 43 | Valid | Dancer control | For details on dancer control, refer to page 5-530. | | |
| 50 | Invalid | Reverse action | — | — | CC-Link communication ② |
| 51 | | Forward action | | | |
| 60 | | Reverse action | CC-Link communication ② | CC-Link communication ② | — |
| 61 | | Forward action | | | |
| 70 | | Reverse action | — | — | PLC function (with frequency reflected) |
| 71 | | Forward action | | | |
| 80 | | Reverse action | PLC function (with frequency reflected) ③ | PLC function (with frequency reflected) ③ | — |
| 81 | | Forward action | | | |
| 90 | | Reverse action | — | — | PLC function (without frequency reflected) ③ |
| 91 | | Forward action | | | |
| 100 | | Reverse action | PLC function (without frequency reflected) ③ | PLC function (without frequency reflected) ③ | — |
| 101 | | Forward action | | | |
| 1000 | Valid | Reverse action | According to Pr. 609 ① | According to Pr. 610 | — |
| 1001 | | Forward action | | | |
| 1010 | | Reverse action | — | — | According to Pr. 609 |
| 1011 | | Forward action | | | |
| 2000 | | Reverse action (without frequency reflected) | According to Pr. 609 ① | According to Pr. 610 | — |
| 2001 | | Forward action (without frequency reflected) | | | |
| 2010 | | Reverse action (without frequency reflected) | — | — | According to Pr. 609 |
| 2011 | | Forward action (without frequency reflected) | | | |

***Tab. 5-213:*** *Related parameters*

① When Pr. 133 ≠ "9999", the Pr. 133 setting is valid.

② For the details of CC-Link communication, refer to the Instruction Manual of the option FR-A8NC, FR-A8NCE.

③ For the details of the PLC function, refer to the FR-A800 PLC Function Programming Manual.

- The set point/deviation input method can also be flexibly selected by Pr. 609 "PID set point/deviation input selection" and the measured value input method can be selected by Pr. 610 "PID measured value input selection". Selection by Pr. 609 and Pr. 610 is valid when Pr. 128 = "1000 to 2011".

| Pr. 609 and Pr. 610 settings | Input method |
|---|---|
| 1 | Terminal 1 ① |
| 2 | Terminal 2 ① |
| 3 | Terminal 4 ① |
| 4 | CC-Link communication |
| 5 | PLC function |

***Tab. 5-214:*** *Setting of Pr. 609 and Pr. 610*

① When the same input method has been selected for the set point and measured value using Pr. 609 and Pr. 610, set point input is invalid. (The inverter runs at set point 0%)

**NOTE**

When terminals 2 and 4 are selected for deviation input, perform bias calibration using C3 and C6 to prevent a minus voltage from being entered as the deviation input signal. Input of a minus voltage might damage devices and the inverter.

- The following shows the relationship between the input values of the analog input terminals and set point, measured value and deviation. (Calibration parameter initial values)

| Input terminal | Inspect specification ① | Relationship with analog input | | | Calibration parameter |
|---|---|---|---|---|---|
| | | Set point | Result | Deviation | |
| Terminal 2 | 0 to 5 V | 0 V = 0%<br>5 V = 100% | 0 V = 0%<br>5 V = 100% | 0 V = 0%<br>5 V = 100% | Pr. 125, C2 to C4 |
| | 0 to 10 V | 0 V = 0%<br>10 V = 100% | 0 V = 0%<br>10 V = 100% | 0 V = 0%<br>10 V = 100% | |
| | 0 to 20 mA | 0 mA = 0%<br>20 mA = 100% | 0 mA = 0%<br>20 mA = 100% | 0 V = 0%<br>20 mA = 100% | |
| Terminal 1 | 0 to ±5 V | –5 V to 0 V = 0%<br>5 V = +100% | –5 V to 0 V = 0%<br>5 V = +100% | –5 V = –100%<br>0 V = 0%<br>5 V = +100% | When Pr. 128 = "10", Pr. 125, C2 to C4.<br>When Pr. 128 ≥ "1000", C12 to C15. |
| | 0 to ±10 V | –10 V to 0 V = 0%<br>10 V = +100% | –10 V to 0 V = 0%<br>10 V = +100% | –10 V = –100%<br>0 V = 0%<br>10 V = +100% | |
| Terminal 4 | 0 to 5 V | 0 V to 1 V = 0%<br>5 V = 100% | 0 V to 1 V = 0%<br>5 V = 100% | 0 V = –20%<br>1 V = 0%<br>5 V = 100% | Pr. 126, C5 to C7 |
| | 0 to 10 V | 0 V to 2 V = 0%<br>10 V = 100% | 0 V to 2 V = 0%<br>10 V = 100% | 0 V = –20%<br>1 V = 0%<br>10 V = 100% | |
| | 0 to 20 mA | 0 to 4 mA = 0%<br>20 mA = 100% | 0 to 4 mA = 0%<br>20 mA = 100% | 0 V = –20%<br>4 mA = 0%<br>20 mA = 100% | |

***Tab. 5-215:*** *Relationship between the signals*

① Can be changed by Pr. 73 and Pr. 267 and the voltage/current input switch. (Refer to page 5-376.)

**NOTE**

Always perform calibration after changing the voltage/input specification with Pr. 73, Pr. 267, and the voltage/current input selection switch.

### Input/output signals

- Assigning the PID control valid terminal signal (X14) to the input terminal by Pr. 178 to Pr. 189 (input terminal function selection) enables PID control to be performed only when the X14 signal is turned ON. When the X14 signal is OFF, regular inverter running is performed without PID action.
- Input signal

| Signal | Function | Pr. 178 to Pr. 189 setting | Description |
|---|---|---|---|
| X14 | PID control valid terminal | 14 | When the signal is assigned to the input terminal, PID control is enabled when the signal is ON. |
| X80 | Second PID control valid terminal | 80 | |
| X64 | PID forward/reverse action switchover | 64 | PID control is switched between forward and reverse action without changing parameters by turning ON the signal. |
| X79 | Second PID forward/reverse action switchover | 79 | |
| X72 | PID integral value reset | 72 | Integral and differential values can be reset by turning the signal ON. |
| X73 | Second PID P control switchover | 73 | |

***Tab. 5-216:*** *Input signals and parameter settings*

- Output signal

| Signal | Function | Pr. 190 to Pr. 196 setting value | | Description |
|---|---|---|---|---|
| | | Positive logic | Negative logic | |
| FUP | PID upper limit | 15 | 115 | Output when the measured value signal exceeds Pr. 131 "PID upper limit" (Pr. 1143 "Second PID upper limit"). |
| FUP2 | Second PID upper limit | 201 | 301 | |
| FDN | PID lower limit | 14 | 114 | Output when the measured value signal exceeds Pr. 132 "PID lower limit" (Pr. 1144 "Second PID lower limit"). |
| FDN2 | Second PID lower limit | 200 | 300 | |
| RL | PID forward/reverse rotation output | 16 | 116 | "Hi" is output when the output display of the parameter unit is forward rotation (FWD), and "Low" is output when the display is reverse rotation (REV) and stop (STOP). |
| RL2 | Second PID forward/ reverse rotation output | 202 | 302 | |
| PID | During PID control activated | 47 | 147 | Turns ON during PID control.<br>When the PID calculation result is not reflected to the output frequency (Pr. 128 < "2000"), the PID signal turns OFF at turn OFF of the start signal.<br>When the PID calculation result is reflected to the output frequency (Pr. 128 ≥ "2000"), the PID signal turns ON regardless of the start signal status during PID calculation. |
| PID2 | Second During PID control activated | 203 | 303 | |
| SLEEP | PID output interruption | 70 | 170 | Set Pr. 575 "Output interruption detection time" (Pr. 1147 "Second output interruption detection time") ≠ "9999". This signal turns ON when the PID output suspension function is activated. |
| SLEEP2 | During second PID output shutoff | 204 | 304 | |

***Tab. 5-217:*** *Output signals and parameter settings*

**NOTE**

Changing the terminal functions with Pr. 178 to Pr. 189 and Pr. 190 to Pr. 196 may affect other functions. Set parameters after confirming the function of each terminal.

**PID automatic switchover control (Pr. 127)**

- The system can be started up more quickly by starting up without PID control activated.
- When Pr. 127 "PID control automatic switchover frequency" is set, the startup is made without PID control until the output frequency reaches the Pr. 127 setting. Once the PID control starts, the PID control is continued even if the output frequency drops to Pr. 127 setting or lower.

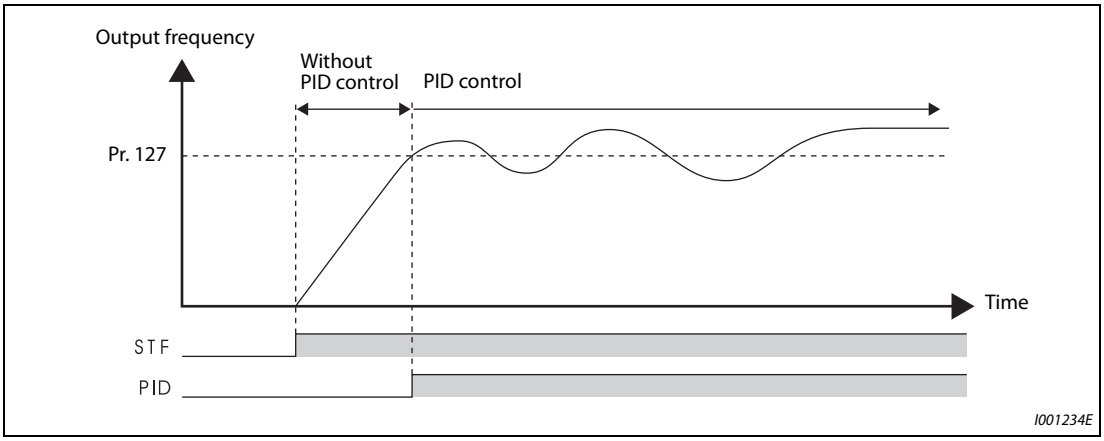


***Fig. 5-252:*** *Automatic switchover to PID control*

**Selection of action at a communication error and SLEEP function stop selection (FUP signal, FDN signal,Y48 signal, Pr. 554)**

- Using Pr. 554 "PID signal operation selection", set the action when the measured value input exceeds the upper limit (Pr. 131 "PID upper limit") or lower limit (Pr. 132 "PID lower limit"), or when the deviation input exceeds the permissible value (Pr. 553 "PID deviation limit").
- Choose whether to output the signals (FUP, FDN, Y48) only or to activate the protective function to output the inverter shutoff.
- The stop action when the inverter output is shut off by the SLEEP function can be selected.

| Pr. 554 setting | Inverter operation | | |
|---|---|---|---|
| | At FUP signal, FDN signal output ① | At Y48 signal output ① | At SLEEP operation start |
| 0 (Initial value) | Signal output only | Signal output only | Coasts to stop |
| 1 | Signal output + output shutoff (E.PID) | | |
| 2 | Signal output only | Signal output + output shutoff (E.PID) | |
| 3 | Signal output + output shutoff (E.PID) | | |
| 10 | Signal output only | Signal output only | Deceleration stop |
| 11 | Signal output + output shutoff (E.PID) | | |
| 12 | Signal output only | Signal output + output shutoff (E.PID) | |
| 13 | Signal output + output shutoff (E.PID) | | |

***Tab. 5-218:*** *Stop action at SLEEP function*

① When each of Pr. 131, Pr. 132 and Pr. 553 corresponding to each of the FUP, FDN and Y48 signals is set to "9999" (function not activated), signal output and protective function are disabled.

**PID output suspension function (SLEEP function) (SLEEP signal, Pr. 575 to Pr. 577)**

- When a status where the output frequency after PID calculation is less than Pr. 576 "Output interruption detection level" has continued for the time set in Pr. 575 "Output interruption detection time" or longer, inverter running is suspended. This allows the amount of energy consumed in the inefficient low-speed range to be reduced.
- When the deviation (for instance, the set point - measured value) reaches the PID output shutoff release level (Pr. 577 setting value -1000%) while the PID output suspension function is activated, the PID output suspension function is released, and PID control operation is automatically restarted.
- Whether to allow motor to coast to a stop or perform a deceleration stop when SLEEP operation is started can be selected using Pr. 554.
- While the PID output suspension function is activated, the PID output interruption signal (SLEEP) is output. During this time, the inverter running signal (RUN) turns OFF and the During PID control activated signal (PID) turns ON.
- For the terminal used for the SLEEP signal, set "70 (positive logic)" or "170 (negative logic)" in any of Pr. 190 to Pr. 196 (output terminal function selection).

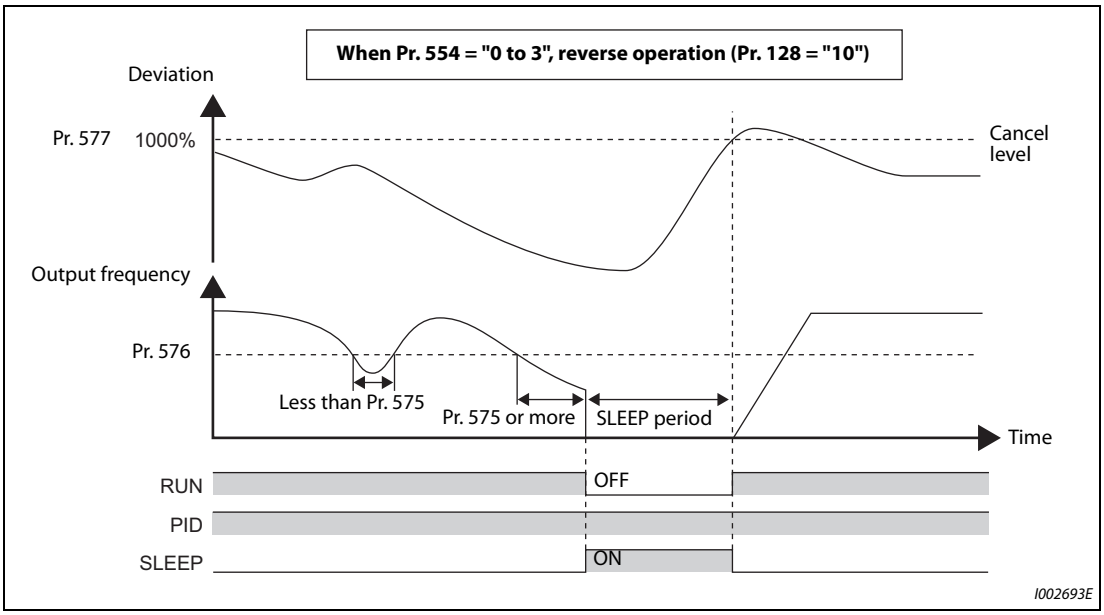


***Fig. 5-253:*** *Output interruption (SLEEP function)*

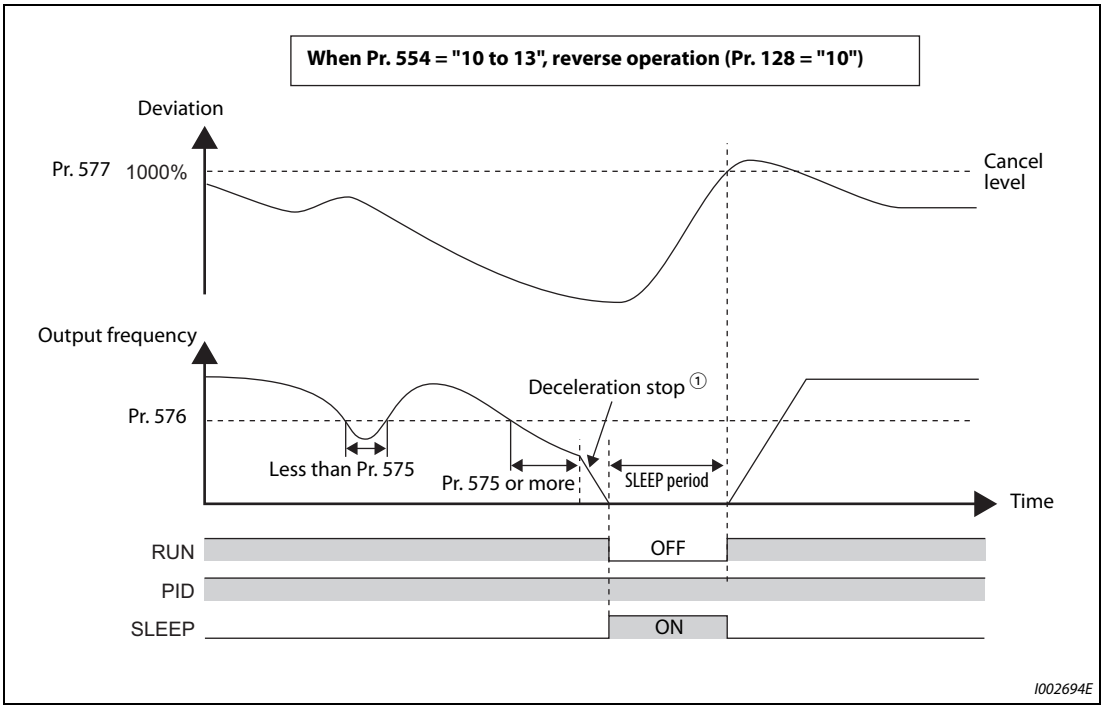


***Fig. 5-254:*** *Output interruption (SLEEP function)*

① When the PID output shutoff release level is reached during a deceleration stop, output shutoff is released, operation is re-accelerated and PID control is continued. During deceleration Pr. 576 "Output interruption detection level" is invalid.

### PID monitor function

- This function displays the PID control set point, measured value and deviation on the operation panel, and can output these from the terminals FM, AM and CA.
- An integral value indicating a negative % can be displayed on the deviation monitor. 0% is displayed as 1000. (These values cannot be output on the deviation monitor from terminals FM and CA.)
- Set the following values to Pr. 52 "Operation panel main monitor selection", Pr. 774 to Pr. 776 (Operation panel monitor selection), Pr. 992 "Operation panel setting dial push monitor selection", Pr. 54 "FM/CA terminal function selection" and Pr. 158 "AM terminal function selection" for each monitor.

| Parameter settings | Monitor description | Minimum incre-ment | Monitor range | | | Remarks |
|---|---|---|---|---|---|---|
| | | | Terminal FM/CA | Terminal AM | Operatio n panel | |
| 52 | PID set point | 0.1% | 0 to 100% ① | | | "0" is displayed at all times when PID control is based in deviation input. |
| 92 | Second PID set point | | | | | |
| 53 | PID measured value | 0.1% | 0 to 100% ① | | | |
| 93 | Second PID measured value | | | | | |
| 67 | PID measured value 2 | 0.1% | 0 to 100% ① | | | The measured value is also displayed when PID control is invalid. "0" is displayed at all times when PID control is based in deviation input. |
| 95 | Second PID measured value 2 | | | | | |
| 54 | PID deviation | 0.1% | Setting not available | -100% to 100% ① ② | 900% to 1100% or -100% to 100% ① | Using Pr. 290 "Monitor negative output selection", minus values can be output to the terminal AM and displayed on the operation panel (FR-DU08). Even if minus display is enabled, the display range is 900% to 1100% in monitors on the operation panel. (0% is offset and displayed as 1000%.) |
| 94 | Second PID deviation | | | | | |
| 91 | PID manipulated variable | 0.1% | Setting not available | -100% to 100% ② | 900% to 1100% or -100% to 100% | |
| 96 | Second PID manipulated variable | | | | | |

***Tab. 5-219:*** *PID monitor function*

① When C42 (Pr. 934) and C44 (Pr. 935) are set, the minimum increment changes from unit % to no unit, and the monitor range can be changed. (Refer to page 5-521.)

② When the minus value display is set disabled using Pr. 290, the terminal AM output becomes "0".

### Adjustment procedure

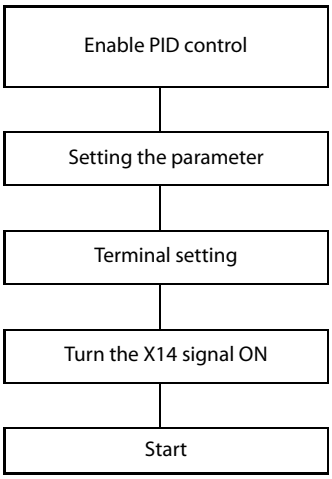


When Pr. 128 ≠ "0", PID control is enabled.
Set the set point, measured value and deviation input methods at Pr. 128, Pr. 609 and Pr. 610.

Adjust the PID control parameters of Pr. 127, Pr. 129 to Pr. 134, Pr. 553, Pr. 554, Pr. 575 to Pr. 577.

Set the I/O terminals for PID control. (Pr. 178 to Pr. 189 (input terminal function selection), Pr. 190 to Pr. 196 (output terminal function selection))

When the X14 signal is assigned to the input terminal, PID control is enabled by the X14 signal turning ON.

### Calibration example

Adjust room temperature to 25 °C by PID control using a detector that outputs 4 mA at 0 °C and 20 mA at 50 °C.)

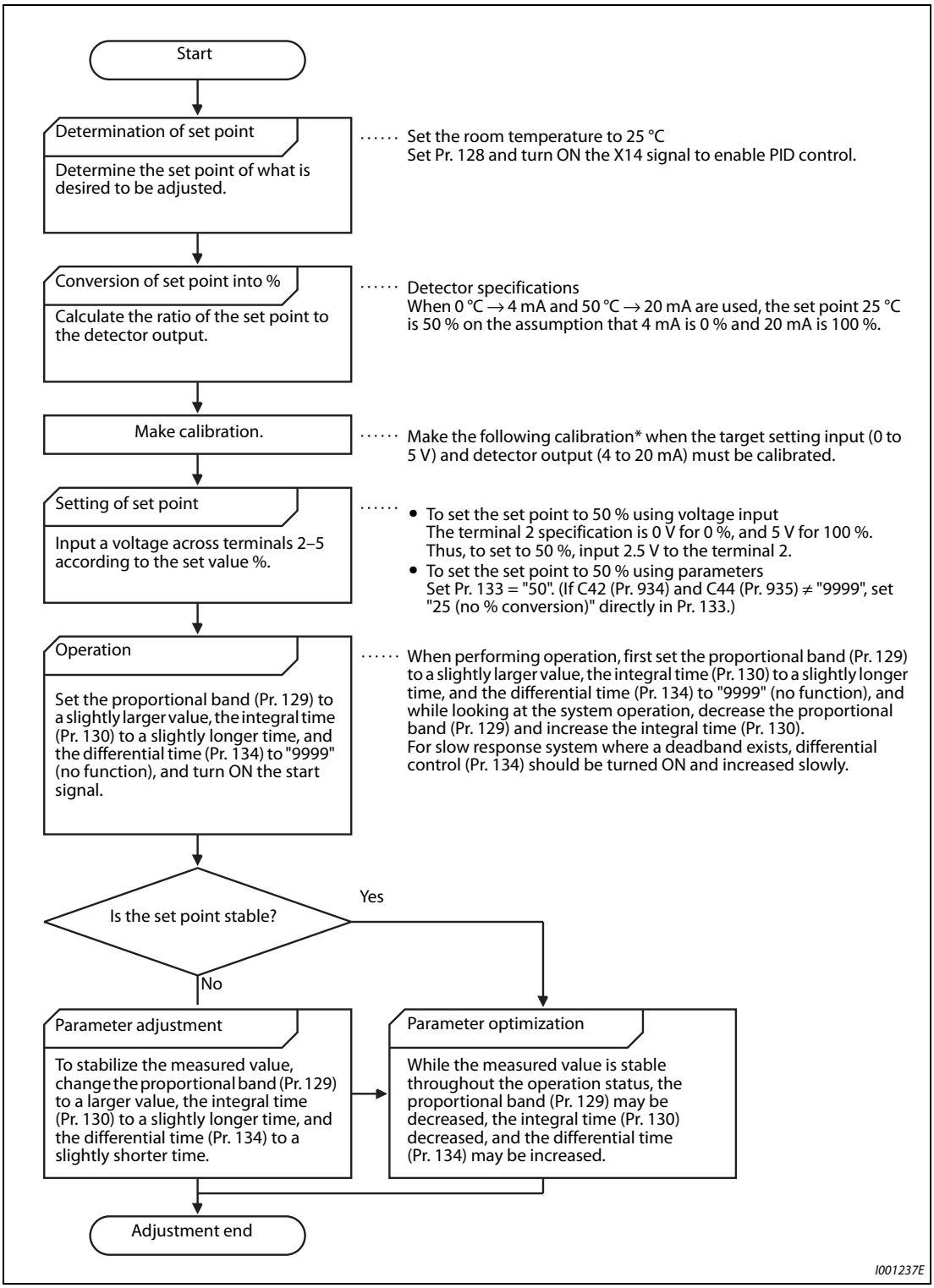


***Fig. 5-255:*** *Calibration example*

* When calibration is required
Calibrate detector output and set point input by Pr. 125, C2 (Pr. 902) to C4 (Pr. 903) (terminal 2) or Pr. 126, C5 (Pr. 904) to C7 (Pr. 905) (terminal 4).
When both C42 (Pr. 934) and C44 (Pr. 935) are other than "9999", calibrate the detector output and set point input by Pr. 934 and Pr. 935 (terminal 4).
(For the details, refer to page 5-388.)
Make calibration in the PU operation mode during an inverter stop.

● Calibrating set point input

**Example ▽** To enter the set point on terminal 2

① Apply the input (for example, 0 V) of set point setting 0% across terminals 2 and 5.

② Using C2 (Pr. 902), enter the frequency (for example, 0 Hz) to be output by the inverter when the deviation is 0%.

③ Using C3 (Pr. 902), set the voltage value at 0%.

④ Apply the input (for example, 5 V) of set point setting 100% across terminals 2 and 5.

⑤ Using Pr. 125, enter the frequency (for example, 60 Hz) to be output by the inverter when the deviation is 100%.

⑥ Using C4 (Pr. 903), set the voltage value at 100%.

△

**NOTE** When the set point is set at Pr. 133, the setting frequency of C2 (Pr. 902) is equivalent to 0% and the setting frequency of Pr. 125 (Pr. 903) is equivalent to 100%.

● Calibrating measured value input

① Apply the input (for example, 4 mA) of measured value 0% across terminals 4 and 5.

② Perform calibration by C6 (Pr. 904).

③ Apply the input (for example, 20 mA) of measured value 100% across terminals 4 and 5.

④ Perform calibration by C7 (Pr. 905).

**NOTES** Set the frequencies set at C5 (Pr. 904) and Pr. 126 to each of the same values set at C2 (Pr. 902) and Pr. 125.

The display unit for analog input can be changed from "%" to "V" or "mA". (Refer to page 5-392.)

● The figure below shows the results of having performed the calibration above.

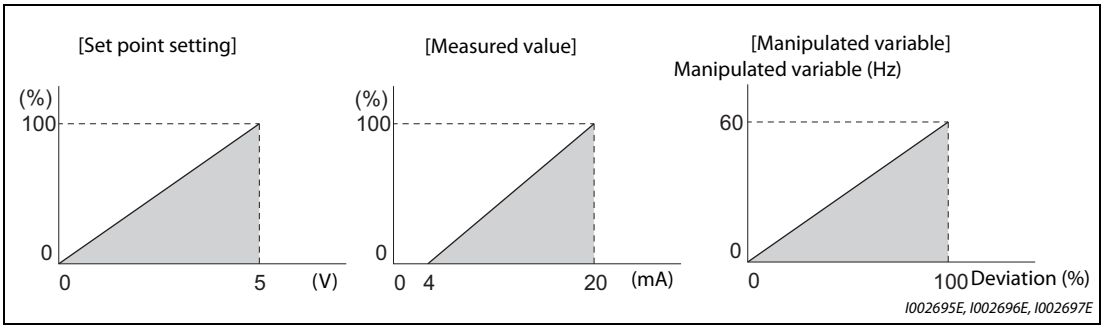


***Fig. 5-256:*** *Input calibration*

### Setting multiple PID functions

- When the second PID function is set, two sets of PID functions can be switched for use. The second PID function is enabled by turning ON the RT signal.
- The second PID function is enabled also when the second PID function is set with the first PID function set to disabled (Pr. 128 = "0") or frequency is set not to be reflected (Pr. 128 = "90, 91, 100, 101, 2000, 2001, 2010, 2011")
- When "10" (second function enabled only during constant-speed operation) is set to Pr. 155, the second PID function is not selected even if the RT signal turns ON.
- The second PID function parameters and signals function in the same way as the following parameters and signals of the first PID function. Refer to the first PID function when setting the second PID functions.

| Classification | First PID function parameters | | Second PID function parameters | |
|---|---|---|---|---|
| | Pr. | Name | Pr. | Name |
| Parameter | 127 | PID control automatic switchover frequency | 754 | Second PID control automatic switchover frequency |
| | 128 | PID action selection | 753 | Second PID action selection |
| | 129 | PID proportional band | 756 | Second PID proportional band |
| | 130 | PID integral time | 757 | Second PID integral time |
| | 131 | PID upper limit | 1143 | Second PID upper limit |
| | 132 | PID lower limit | 1144 | Second PID lower limit |
| | 133 | PID action set point | 755 | Second PID action set point |
| | 134 | PID differential time | 758 | Second PID differential time |
| | 553 | PID deviation limit | 1145 | Second PID deviation limit |
| | 554 | PID signal operation selection | 1146 | Second PID signal operation selection |
| | 575 | Output interruption detection time | 1147 | Second output interruption detection time |
| | 576 | Output interruption detection level | 1148 | Second output interruption detection level |
| | 577 | Output interruption cancel level | 1149 | Second output interruption cancel level |
| | 609 | PID set point/deviation input selection | 1140 | Second PID set point/deviation input selection |
| | 610 | PID measured value input selection | 1141 | Second PID measured value input selection |

***Tab. 5-220:*** *Parameters for setting multiple PID functions*

| Classification | First PID function parameters | | Second PID function parameters | |
|---|---|---|---|---|
| | Signal | Name | Signal | Name |
| Input signal | X14 | PID control valid terminal | X80 | Second PID control valid terminal |
| | X64 | PID forward/reverse action switchover | X79 | Second PID forward/reverse action switchover |
| | X72 | PID integral value reset | X73 | Second PID P control switchover |
| Output signal | FUP | PID upper limit | FUP2 | Second PID upper limit |
| | FDN | PID lower limit | FDN2 | Second PID lower limit |
| | RL | PID forward/reverse rotation output | RL2 | Second PID forward/reverse rotation output |
| | PID | During PID control activated | PID2 | Second During PID control activated |
| | SLEEP | PID output interruption | SLEEP2 | During second PID output shutoff |
| | Y48 | PID deviation limit | Y205 | Second PID deviation limit |

***Tab. 5-221:*** *I/O signals for setting multiple PID functions*

**NOTES**

Even if the X14 signal is ON, PID control is stopped and multi-speed or JOG operation is performed when the RH, RM, RL, or REX signal (multi-speed operation) or JOG signal (JOG operation) is input.

PID control is invalid under the following settings.
Pr. 79 "Operation mode selection" = "6" (Switchover mode)

Note that input to the terminal 1 is added to the terminals 2 and 4 inputs. For example when Pr. 128 = "20 or 21", the terminal 1 input is considered as a set point and added to the set point of the terminal 2.

To use terminal 4 and 1 inputs in PID control, set "0" (initial value) to Pr. 858 "Terminal 4 function assignment" and Pr. 868 "Terminal 1 function assignment". When a value other than "0", PID control is invalid.

Changing the terminal assignment using Pr. 178 to Pr. 189 or Pr. 190 to Pr. 196 may affect other functions. Set parameters after confirming the function of each terminal.

When PID control is selected, the minimum frequency becomes the frequency of Pr. 902 and the maximum frequency becomes the frequency of Pr. 903.
(The Pr. 1 "Maximum frequency" and Pr. 2 "Minimum frequency" settings also are valid.)

During PID operation, the remote operation function is invalid.

When control is switched to PID control during normal operation, the frequency during that operation is not carried over, and the value resulting from PID calculation referenced to 0 Hz becomes the command frequency.

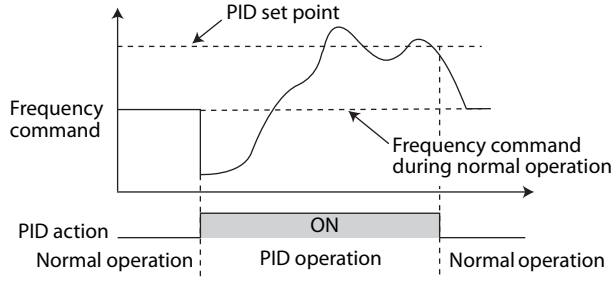


Operation when control is switched to PID control during normal operatio

| Parameters referred to | | | |
|---|---|---|---|
| Pr. 59 | Remote function selection | => | page 5-239 |
| Pr. 73 | Analog input selection | => | page 5-376 |
| Pr. 79 | Operation mode selection | => | page 5-255 |
| Pr. 178 to Pr. 189 | (input terminal function selection) | => | page 5-409 |
| Pr. 190 to Pr. 196 | (output terminal function selection) | => | page 5-350 |
| Pr. 290 | Monitor negative output selection | => | page 5-330 |
| C2 (Pr. 902) to C7 (Pr. 905) | Frequency setting voltage (current) bias/gain | => | page 5-388 |

## 5.14.10 Changing the display increment of numerical values used in PID control

When the parameter unit (FR-PU07) is used, the display unit of parameters and monitored items related to PID control can be changed to various units.

| Pr. | Name | Initial value | Setting range | Description | |
|---|---|---|---|---|---|
| 759<br>A600 | Operation mode selection | 0 | 0 to 43 | Change the PID control-related display unit that is displayed on the parameter unit (FR-PU07). | |
| | | | 9999 | Without display unit switching | |
| C42<br>A630<br>(934) ① | PID display bias coefficient | 9999 | 0 to 500 | Set the coefficient of the bias side (minimum) of measured value input. | |
| | | | 9999 | Displayed in %. | |
| C43<br>A631<br>(934) ① | PID display bias analog value | 20% | 0 to 300% | Set the converted % of the bias side (minimum) current/voltage of measured value input. | |
| C44<br>A632<br>(935) ① | PID display gain coefficient | 9999 | 0 to 500 | Set the coefficient of the gain side (maximum) of measured value input. | |
| | | | 9999 | Displayed in %. | |
| C45<br>A633<br>(935) ① | PID display gain analog value | 100% | 0 to 300% | Set the converted % of the gain side (maximum) current/voltage of measured value input. | |
| 1136<br>A670 | Second PID display bias coefficient | 9999 | 0 to 500 | Refer to C42(934) | Second PID control |
| | | | 9999 | | |
| 1137<br>A671 | Second PID display bias analog value | 20% | 0 to 300% | Refer to C43(934) | |
| 1138<br>A672 | Second PID display gain coefficient | 9999 | 0 to 500 | Refer to C44(935) | |
| | | | 9999 | | |
| 1139<br>A673 | Second PID display gain analog value | 100% | 0 to 300% | Refer to C45(935) | |
| 1142<br>A640 | Second PID unit selection | 9999 | 0 to 43, 9999 | Refer to Pr. 759 | |

① The parameter number in parentheses is the one for use with the parameter unit (FR-PU07).

**Calibration of PID display bias and gain(C42 (Pr. 934) to C45 (Pr. 935))**

- When both C42 (Pr. 934) and C44 (Pr. 935) ≠ "9999", the bias and gain values for the set point, measured value and deviation in PID control can be calibrated.
- "Bias"/"gain" function can adjust the relation between PID displayed coefficient and measured value input signal that is externally input. Examples of these measured value input signals are 0 to 5 V DC, 0 to 10 V DC, or 4 to 2 mA DC.
- Set the value that is displayed when the PID measured value (control amount) is 0% to C42 (Pr. 934) and the value that is displayed when the PID measured value (control amount) is 100% to C44 (Pr. 935).

- When both of C42 (Pr. 934) and C44 (Pr. 935) ≠ "9999" and Pr. 133 is set as the set point, the setting of C42 (Pr. 934) is treated as 0%, and C44 (Pr. 935) as 100%.

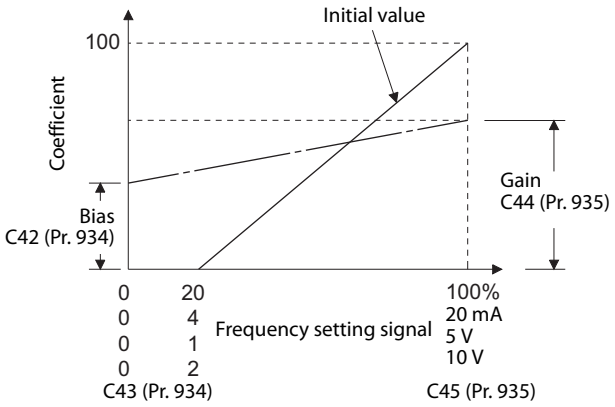


***Fig. 5-257:*** *PID bias and gain*

- There are three methods to adjust the PID display bias/gain.
  - ❶ Method to adjust any point by application of a current (voltage) to the measured value input terminal
  - ❷ Method to adjust any point without application of a current (voltage) to the measured value input terminal
  - ❸ Method to adjust only the display coefficient without adjustment of current (voltage)

  (Refer to page 5-388 for details on (❶) to (❸), and make the necessary adjustments by considering C7 (Pr. 905) as C45 (Pr. 935) and Pr. 126 as C44 (Pr. 935).

**NOTE**

Always calibrate the input after changing the voltage/current input specification with Pr. 73 and Pr. 267, and the voltage/current input selection switch.

- Take caution when the following condition is satisfied because the inverter recognizes the deviation value as negative (positive) value even though a positive (negative) deviation is given: Pr. 934 (PID bias coefficient) > Pr. 935 (PID gain coefficient)
  To perform a reverse action, set Pr. 128 "PID action selection" to forward action. Alternatively, to perform a forward action, set Pr. 128 to reverse action.

| Pr. 934 < Pr. 935 (normal setting) | | Pr. 934 ≥ Pr. 935 | |
|---|---|---|---|
| Reverse action | Reverse action setting to Pr. 128 | Reverse action | Forward action setting to Pr. 128 |
| Forward action | Forward action setting to Pr. 128 | Forward action | Reverse action setting to Pr. 128 |
| PID output shutoff release level | Pr. 577 – 1000 | PID output shutoff release level | 1000 – Pr. 577 |

***Tab. 5-222:*** *Special conditions for parameter settings*

**Example ▽** Set the following:
Pr. 934 = "500", 20% (4 mA is applied), Pr. 935 = "100", 100% (20 mA is applied).
When the set point=400 and the measured value = 360, the deviation is +40 (>0), but the inverter recognizes the deviation as –10% (<0). Because of this, operation amount does not increase in the reverse operation setting.
The operation amount increases when the forward operation is set.
To perform PID output shutoff release at deviation of +40 or higher, set Pr. 577 = "960".

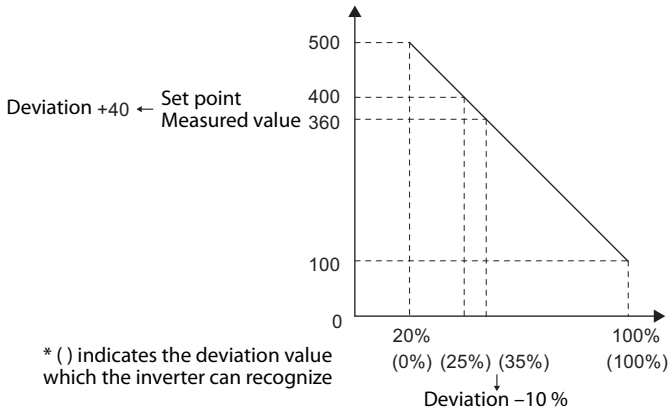


△

- The display of the following parameters is changed according to the C42 (Pr. 934)), C44 (Pr. 935), Pr. 1136, and Pr. 1138 settings.

| Pr. | Name | Pr. | Name |
|---|---|---|---|
| 131 | PID upper limit | 1143 | Second PID upper limit |
| 132 | PID lower limit | 1144 | Second PID lower limit |
| 133 | PID action set point | 755 | Second PID action set point |
| 553 | PID deviation limit | 1145 | Second PID deviation limit |
| 577 | Output interruption cancel level | 1149 | Second output interruption cancel level |
| 761 | Pre-charge ending level | 766 | Second pre-charge ending level |
| 763 | Pre-charge upper detection level | 768 | Second pre-charge upper detection level |

***Tab. 5-223:*** *Influence of C42 (Pr. 934)), C44 (Pr. 935), Pr. 1136, and Pr. 1138 on other parameter displays*

### Changing the PID display coefficient of the parameter unit (FR-PU07-01) (Pr. 759)

Use Pr. 759 "PID unit selection" to change the unit displayed on FR-PU07-01. For the coefficient set in C42 (Pr. 934) to C44 (Pr. 935), the displayed units can be changed to the following units.

| Pr. 759 setting | Displayed unit description | Unit name |
|---|---|---|
| 9999 | % | % |
| 0 | — | Not displayed |
| 1 | K | Kelvin |
| 2 | C | Degree Celsius |
| 3 | F | Degree Fahrenheit |
| 4 | PSI | Pound-force per Square Inch |
| 5 | MPa | Mega Pascal |
| 6 | kPa | Kilo Pascal |
| 7 | Pa | Pascal |
| 8 | bar | Bar |
| 9 | mbr | Millibar |
| 10 | GPH | Gallon per Hour |
| 11 | GPM | Gallon per Minute |
| 12 | GPS | Gallon per Second |
| 13 | L/H | Liter per Hour |
| 14 | L/M | Liter per Minute |
| 15 | L/S | Liter per Second |
| 16 | CFH | Cubic Feet per Hour |
| 17 | CFM | Cubic Feet per Minute |
| 18 | CFS | Cubic Feet per Second |
| 19 | CMH | Cubic Meter per Hour |
| 20 | CMM | Cubic Meter per Minute |
| 21 | CMS | Cubic Meter per Second |

| Pr. 759 setting | Displayed unit description | Unit name |
|---|---|---|
| 22 | ftM | Feet per Minute |
| 23 | ftS | Feet per Second |
| 24 | m/M | Meter per Minute |
| 25 | m/S | Meter per Second |
| 26 | lbH | Pound per Hour |
| 27 | lbM | Pound per Minute |
| 28 | lbS | Pound per Second |
| 29 | iWC | Inch Water Column |
| 30 | iWG | Inch Water Gauge |
| 31 | fWG | Feet of Water Gauge |
| 32 | mWG | Meter of Water Gauge |
| 33 | iHg | Inches of Mercury |
| 34 | mHg | Millimeters of Mercury |
| 35 | kgH | Kilograms per Hour |
| 36 | kgM | Kilograms per Minute |
| 37 | kgS | Kilograms per Second |
| 38 | ppm | Pulse per Minute |
| 39 | pps | Pulse per Second |
| 40 | kW | Kilo Watt |
| 41 | hp | Horse Power |
| 42 | Hz | Hertz |
| 43 | rpm | Revolutions per Minute |

***Tab. 5-224:*** *Changing the unit displayed on FR-PU07-01*

## 5.14.11 PID pre-charge function

This function drives the motor at a certain speed before starting PID control. This function is useful for a pump with a long hose. Without this function, PID control would start before the pump is filled with water, and proper control would not be performed.

| Pr. | Name | Initial value | Setting range | Description | |
|---|---|---|---|---|---|
| 760<br>A616 | Pre-charge fault selection | 0 | 0 | Fault indication with output shutoff immediately after pre-charge fault occurs. | |
| | | | 1 | Fault indication with deceleration stop after pre-charge fault occurs. | |
| 761<br>A617 | Pre-charge ending level | 9999 | 0 to 100% | Set the measured amount to end the pre-charge operation. | |
| | | | 9999 | Without pre-charge ending level | |
| 762<br>A618 | Pre-charge ending time | 9999 | 0 to 3600 s | Set the time to end the pre-charge operation. | |
| | | | 9999 | Without pre-charge ending time | |
| 763<br>A619 | Pre-charge upper detection level | 9999 | 0 to 100% | Set the upper limit for the pre-charged amount. A pre-charge fault occurs when the measured value exceeds the setting during pre-charging. | |
| | | | 9999 | Without pre-charge upper limit level | |
| 764<br>A620 | Pre-charge time limit | 9999 | 0 to 3600 s | Set the time limit for the pre-charged amount. A pre-charge fault occurs when the pre-charge time exceeds the setting. | |
| | | | 9999 | Without pre-charge time limit | |
| 765<br>A656 | Second pre-charge fault selection | 0 | 0, 1 | Refer to Pr. 760. | Set the second pre-charge function.<br>The second pre-charge function is valid when the RT signal is ON. |
| 766<br>A657 | Second pre-charge ending level | 9999 | 0 to 100%, 9999 | Refer to Pr. 761. | |
| 767<br>A658 | Second pre-charge ending time | 9999 | 0 to 3600 s, 9999 | Refer to Pr. 762. | |
| 768<br>A659 | Second pre-charge upper detection level | 9999 | 0 to 100%, 9999 | Refer to Pr. 763. | |
| 769<br>A660 | Second pre-charge time limit | 9999 | 0 to 3600 s, 9999 | Refer to Pr. 764. | |

**Operation selection for the pre-charge function**

- To enable the pre-charge function when PID control is enabled, set the pre-charge end conditions at Pr. 761 "Pre-charge ending level" and at Pr. 762 "Pre-charge ending time", or set "77" to Pr. 178 to Pr. 189 (input terminal function selection). When operation is started, the inverter runs at the frequency set to Pr. 127 "PID control automatic switchover frequency" to enter the pre-charge state.
- Pre-charge ends and PID control starts after a pre-charge ending condition is satisfied.
- The pre-charge function is also activated at a start after release of a PID output suspension (SLEEP) state or MRS (output shutoff). The PID output suspension (SLEEP) function is not activated until the started pre-charge operation ends.
- During pre-charge operation, the During pre-charge operation (Y49) signal is output. For the terminal used for Y49 signal output, set "49 (positive logic)" or "149 (negative logic)" in any of Pr. 190 to Pr. 196 (Output terminal function selection) to assign the function.

● The pre-charge function valid/invalid settings and pre-charge ending conditions are as follows:

| Pr. 127 setting | Pre-charge ending condition setting | | | Pre-charge function | Valid pre-charge ending condition ① | | |
|---|---|---|---|---|---|---|---|
| | Pr. 761 setting | Pr. 762 setting | X77 signal | | | | |
| 9999 | — | — | — | Disabled | — | | |
| Other than 9999 | 9999 | 9999 | Not assigned | | | | |
| | | | Assigned | Enabled | — | — | X77 |
| | | Other than 9999 | Not assigned | | — | Time | — |
| | | | Assigned | | — | Time | X77 |
| | Other than 9999 | 9999 | Not assigned | | Result | — | — |
| | | | Assigned | | Result | — | X77 |
| | | Other than 9999 | Not assigned | | Result | Time | — |
| | | | Assigned | | Result | Time | X77 |

***Tab. 5-225:*** *Settings of the pre-charge function*

① When two or more ends conditions are satisfied, the pre-charge operation ends by the first-satisfied condition.

**NOTES**

During the pre-charge operation, it is regarded as integrated value=estimated value. The motor speed may drop shortly from the automatic switchover frequency depending on the parameter settings.

Parameter changes and switchover to the second PID control are applied immediately. If PID control has not started when the settings were changed, PID control starts with changed settings. (If PID control has already started, these settings do not apply. If the changed settings already satisfies a condition to start PID control, the PID control starts as soon as these are changed.)

The pre-charge also ends when PID control is set to invalid, the start command has been turned OFF, and output has been shut off.

**Example of pre-charge operation**

- When the measured amount reaches the pre-charge ending level (Pr. 761 "Pre-charge ending level" ≠ "9999")
  The pre-charge operation ends when the measured value reaches the Pr. 761 setting or higher, then the PID control is performed.

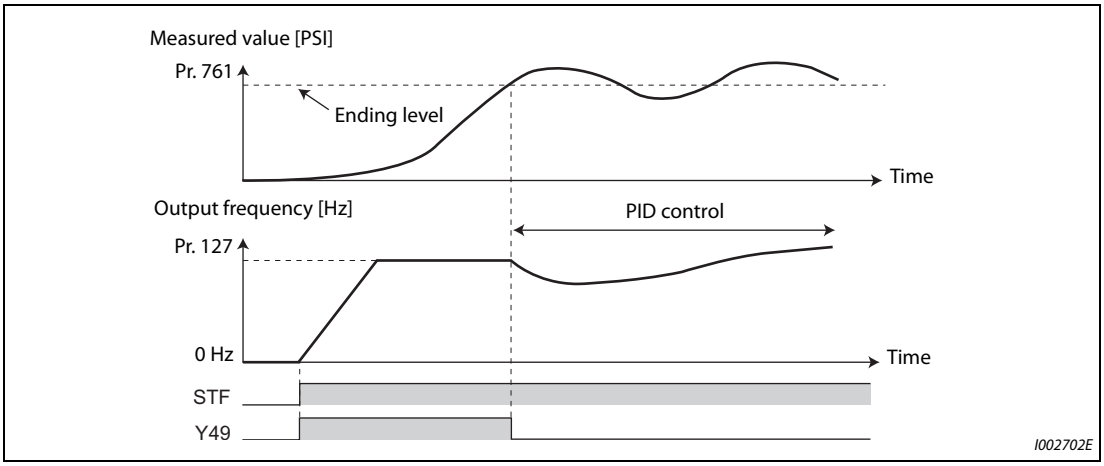


***Fig. 5-258:*** *Pre-charge ending level (Pr. 761 ≠ 9999)*

- When the elapsed time reaches the pre-charge ending time (Pr. 762 "Pre-charge ending time" ≠ "9999")
  The pre-charge operation ends when the pre-charge time reaches the Pr. 762 setting or higher, then the PID control is performed.

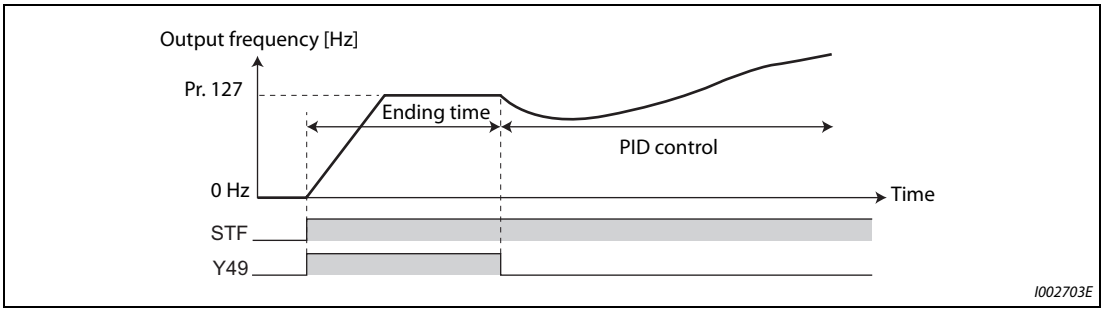


***Fig. 5-259:*** *Pre-charge ending time (Pr. 762 ≠ 9999)*

- When the signal is input to end the pre-charge operation
  When the X77 signal turns ON, the pre-charge operation ends, and the PID control starts. (If a start command is given while the X77 signal is ON, the pre-charge operation is not performed, and PID control starts.)

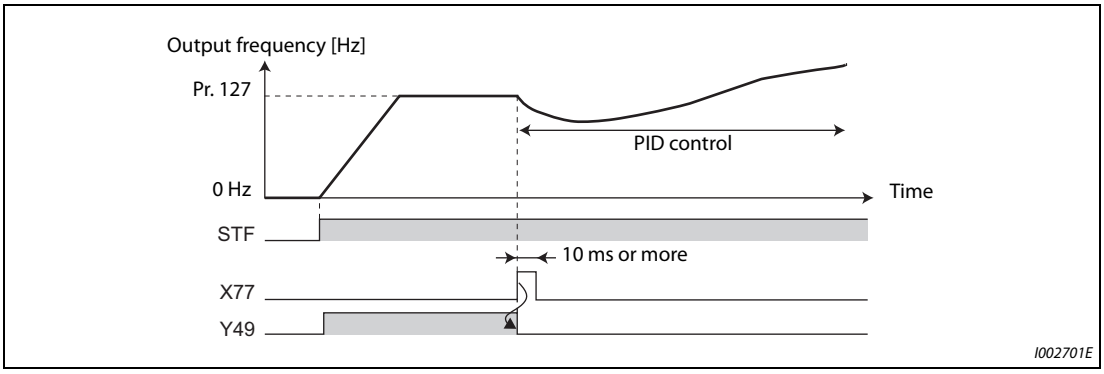


***Fig. 5-260:*** *Assignment of signal X77 (Pr. 178 to Pr. 189)*

**NOTES**

When the PID output suspension (SLEEP) function is in use, and the X77 signal is set to valid after this function is released, set the X77 signal to OFF after checking that the during pre-charge operation signal (Y49) is OFF.

When the PID output suspension (SLEEP) function is in use, and PID control is to be performed immediately after this function is released, leave the X77 signal ON until PID control ends.

When the pre-charge operation is valid, the pre-charge operation is performed at the output shut-off cancellation (MRS signal, etc.). (The pre-charge operation is also performed in the case of instantaneous power failure when the automatic restart after instantaneous power failure is valid.)

When the control method is changed to PID control from a control with higher priority in frequency command (multi-speed setting, Jog operation, etc.), the motor is accelerated/decelerated until its speed reaches the automatic switchover frequency (Pr. 127), and the pre-charge is performed.

**Operation setting at pre-charge fault**

- The protective function can be activated when limit values are exceeded if the time limit is set at Pr. 764 "Pre-charge time limit" and the measured value limit level is set at Pr. 762 "Pre-charge ending time".
- Whether to shut off output immediately after the protective function is activated or after a deceleration stop can be selected by Pr. 760 "Pre-charge fault selection".
- When the time limit is exceeded, the Pre-charge time over (Y51) signal is output. When the measured value limit level is exceeded, the Pre-charge level over (Y53) signal is output. For the Y51 signal, set "51 (forward action)" or "151 (reverse action)" to Pr. 190 to Pr. 196 (output terminal function selection), and for the Y53 signal, set "53 (forward action)" or "153 (reverse action)" in Pr. 190 to Pr. 196 (output terminal function selection) to assign the functions to terminals.

**NOTES**

For Pr. 764 "Pre-charge time limit", set a value greater than Pr. 762 "Pre-charge ending time".

For Pr. 763 "Pre-charge upper detection level", set a value greater than Pr. 761 "Pre-charge ending level".

- Example of protective function by time limit (Pr. 760 = "0")

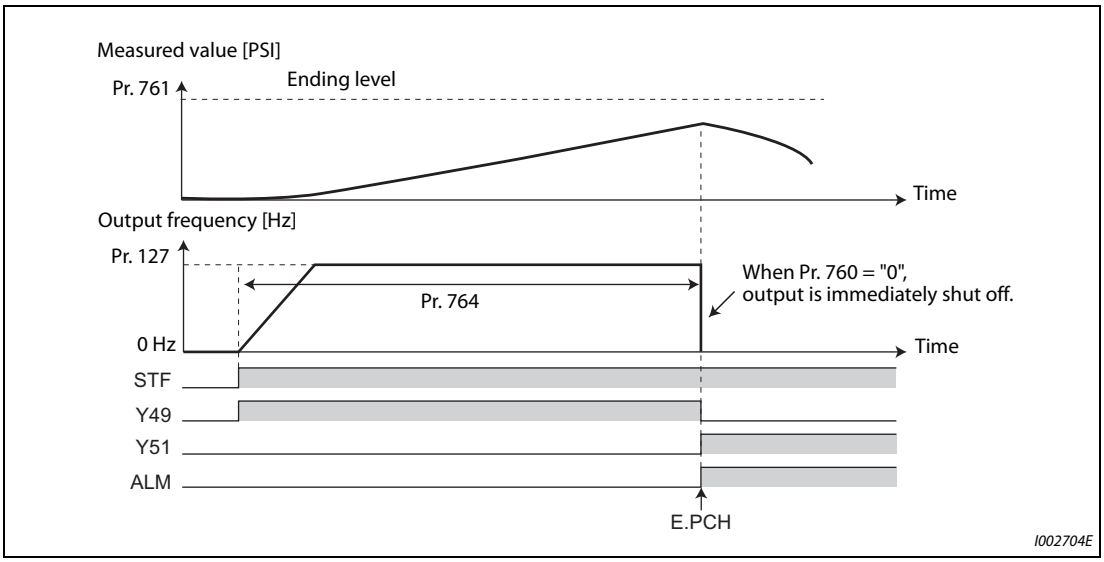


***Fig. 5-261:*** *Reaching of pre-charge time limit*

- Example of protective function measured value limit (Pr. 760 = "1")

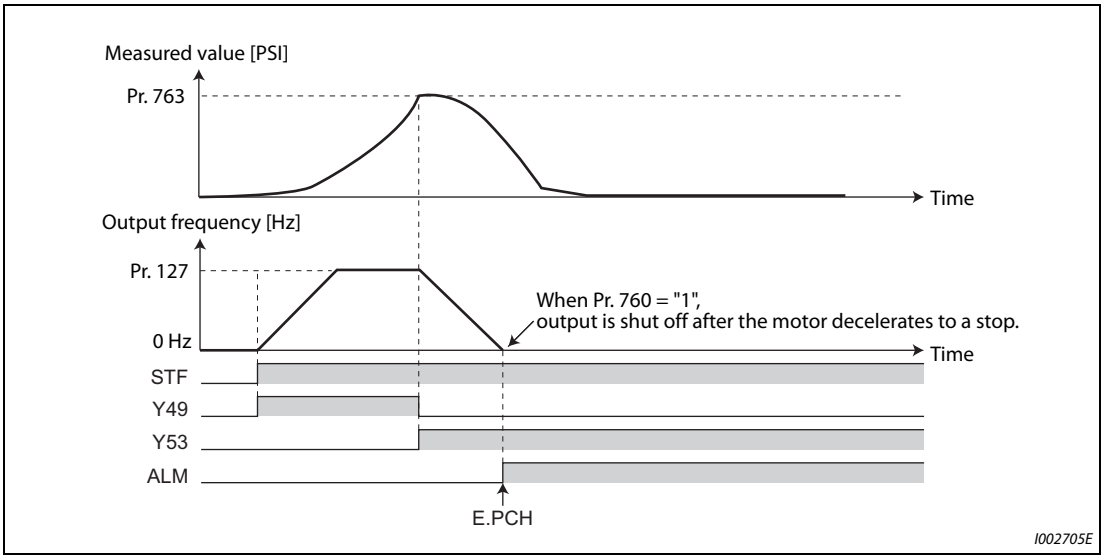


***Fig. 5-262:*** *Reaching of pre-charge limit by the measured amount*

### Setting multiple PID pre-charge functions

- When the second pre-charge function is set, two sets of pre-charge functions can be switched for use. The second pre-charge function is enabled by turning ON the RT signal.
- The second pre-charge function parameters and signals function in the same way as the following parameters and signals of the first pre-charge function. Refer to the first pre-charge function when setting the second pre-charge functions.

| Classification | First pre-charge function parameters | | Second pre-charge function parameters | |
|---|---|---|---|---|
| | Pr. | Name | Pr. | Name |
| Parameter | 760 | Pre-charge fault selection | 765 | Second pre-charge fault selection |
| | 761 | Pre-charge ending level | 766 | Second pre-charge ending level |
| | 762 | Pre-charge ending time | 767 | Second pre-charge ending time |
| | 763 | Pre-charge upper detection level | 768 | Second pre-charge upper detection level |
| | 764 | Pre-charge time limit | 769 | Second pre-charge time limit |

***Tab. 5-226:*** *Parameters for setting multiple PID pre-charge functions*

| Classification | First pre-charge function parameters | | Second pre-charge function parameters | |
|---|---|---|---|---|
| | Signal | Name | Signal | Name |
| Input signal | X77 | Pre-charge end command | X78 | Second pre-charge end command |
| Output signal | Y49 | During pre-charge operation | Y50 | During second pre-charge operation |
| | Y51 | Pre-charge time over | Y52 | Second pre-charge time over |
| | Y53 | Pre-charge level over | Y54 | Second pre-charge level over |

***Tab. 5-227:*** *I/O signals for multiple PID pre-charge functions*

**NOTES**

The second PID pre-charge function is valid also when the first pre-charge function is set to invalid and the second pre-charge function is set.

When "10" (second function enabled only during constant-speed operation) is set to Pr. 155, the second PID function is not selected even if the RT signal turns ON.

## 5.14.12 Dancer control

PID control is performed using the detected dancer roll positions as feedback data. The dancer roll is controlled to be at a designated position.

| Pr. | Name | Initial value | Setting range | Description | | |
|---|---|---|---|---|---|---|
| 44<br>F020 | Second acceleration/ deceleration time | 5 s | 0 to 3600 s | Set the acceleration/deceleration time during dancer control.<br>In dancer control, this parameter becomes the acceleration/deceleration time of the main speed.<br>This setting does not operate as the second acceleration/deceleration time. | | |
| 45<br>F021 | Second deceleration time | 9999 | 0 to 3600 s | Set the deceleration time during dancer control.<br>In dancer control, this parameter becomes the deceleration time of the main speed.<br>This setting does not operate as the second deceleration time. | | |
| | | | 9999 | Pr. 44 is the deceleration time. | | |
| 128<br>A610 | PID action selection | 0 | 0 | No PID action | | |
| | | | 40 | PID reverse action | Additive method: Fixed | For dancer control |
| | | | 41 | PID forward action | Additive method: Fixed | |
| | | | 42 | PID reverse action | Additive method: Ratio | |
| | | | 43 | PID forward action | Additive method: Ratio | |
| | | | Others | Refer to page 5-504. | | |
| 129<br>A613 | PID proportional band | 100% | 0.1 to 1000% | If a narrow proportional band is set (small parameter setting value), the manipulated amount changes considerably by slight changes in the measured value.<br>As a result, response improves as the proportional band becomes narrower, though stability worsens as shown by the occurrence of hunting.<br>Gain Kp=1/proportional band | | |
| | | | 9999 | Without proportional band | | |
| 130<br>A614 | PID integral time | 1s | 0.1 to 3600 s | With deviation step input, this is the time (Ti) used for obtaining the same manipulated amount as proportional band (P) by only integral (I) action.<br>Arrival to the set point becomes quicker the shorter an integral time is set, though hunting is more likely to occur. | | |
| | | | 9999 | Without integral control | | |
| 131<br>A601 | PID upper limit | 9999 | 0 to 100% | Sets the upper limit.<br>The FUP signal is output when the feedback value exceeds this setting.<br>The maximum input (20 mA/5 V/10 V) of the measured value (terminal 4) is equivalent to 100%. | | |
| | | | 9999 | No function | | |
| 132<br>A602 | PID lower limit | 9999 | 0 to 100% | Set the lower limit.<br>The FDN signal is output when the measured value (terminal 4) falls below the setting range.<br>The maximum input (20 mA/5 V/10 V) of the measured value is equivalent to 100%. | | |
| | | | 9999 | No function | | |
| 133<br>A611 | PID action set point | 9999 | 0 to 100% | Set the set point during PID control. | | |
| | | | 9999 | Input of set point by terminal selected by Pr. 609 | | |
| 134<br>A615 | PID differential time | 9999 | 0.01 to 10 s | With deviation ramp input, this is the time (Td) used for obtaining the manipulated amount only by proportional action (P).<br>Response to changes in deviation increase greatly as the differential time increases. | | |
| | | | 9999 | Without differential control | | |

| Pr. | Name | Initial value | Setting range | Description |
|---|---|---|---|---|
| 609<br>A624 | PID set point/deviation input selection | 2 | 1 | Input set point from terminal 1 |
| | | | 2 | Input set point from terminal 2 |
| | | | 3 | Input set point from terminal 4 |
| | | | 4 | Input set point via CC-Link communication |
| | | | 5 | Input set point by PLC function |
| 610<br>A625 | PID measured value input selection | 3 | 1 | Input measured value from terminal 1 |
| | | | 2 | Input measured value from terminal 2 |
| | | | 3 | Input measured value from terminal 4 |
| | | | 4 | Input measured value via CC-Link communication |
| | | | 5 | Input measured value by PLC function |
| 1134<br>A605 | PID upper limit manipulated value | 100% | 0 to 100% | Set the upper limit of PID action. |
| 1135<br>A606 | PID lower limit manipulated value | 100% | 0 to 100% | Set the lower limit of PID action. |

### Block diagram of dancer control

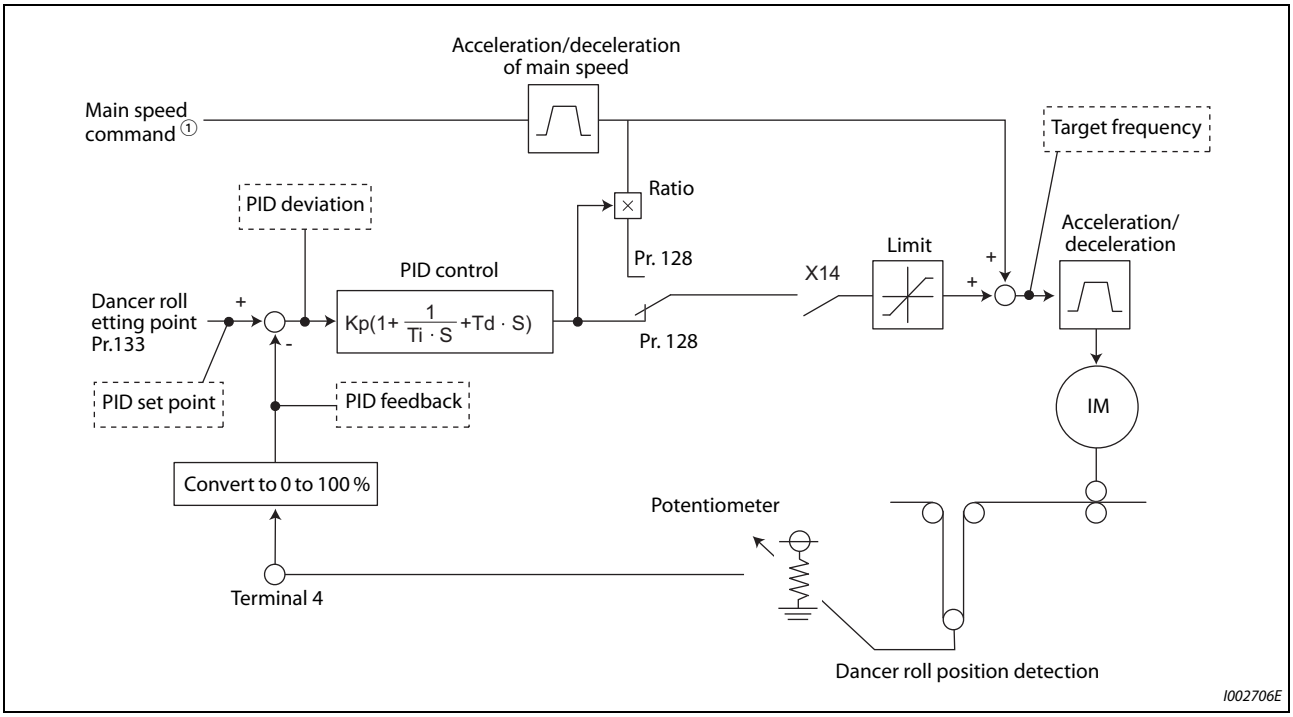


***Fig. 5-263:*** *Dancer control block diagram*

① The main speed can be selected in all operation modes, External (analog voltage input, multi-speed), PU (digital frequency setting) and Communication (RS-485).

**Outline of dancer control**

- Dancer control is performed by setting "40 to 43" in Pr. 128 "PID action selection". The main speed command is the speed command for each operation mode (External, PU and communication). PID control is performed by the dancer roll position detection signal, and the control result is added to the main speed command. For the main speed acceleration/deceleration time, set the acceleration time to Pr. 44 "Second acceleration/deceleration time" and the deceleration time to Pr. 45 "Second deceleration time".

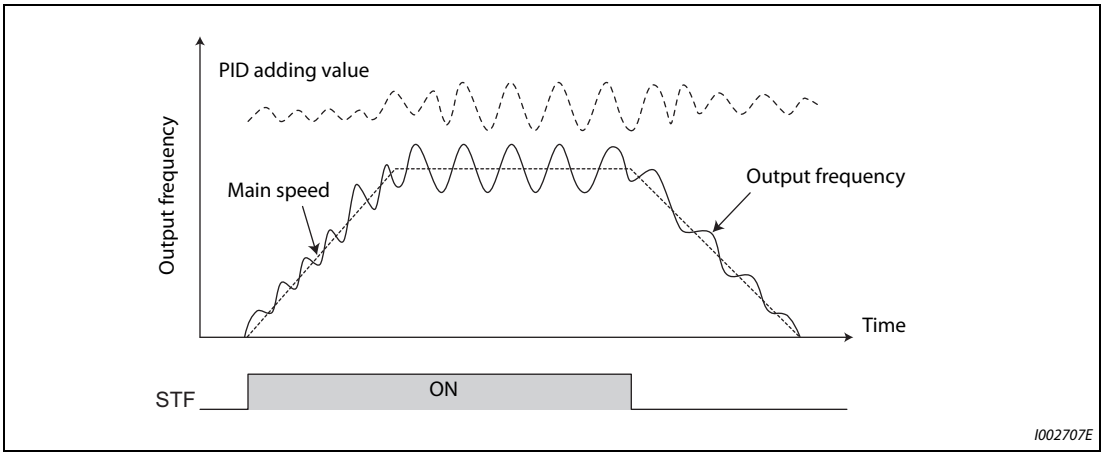


***Fig. 5-264:*** *Signal overlay during dancer control*

**NOTES**

Normally, set Pr. 7 "Acceleration time" and Pr. 8 "Deceleration time" to "0 s". When the Pr. 7 and Pr. 8 settings are large, dancer control response becomes slow during acceleration/deceleration.

The Pr. 127 "PID control automatic switchover frequency "setting is enabled. The larger setting value between Pr. 7 and Pr. 44 is used as the acceleration time during normal operation. For the deceleration time, the larger setting value between Pr. 8 and Pr. 45 is used. (For the details of Pr. 127, refer to page 5-504.)

If an automatic restart after instantaneous power failure is activated during dancer control, E.OC□ or E.OV[] is likely to occur. In such case, disable the automatic restart after instantaneous power failure function (Pr. 57 = "9999").

### Connection diagram

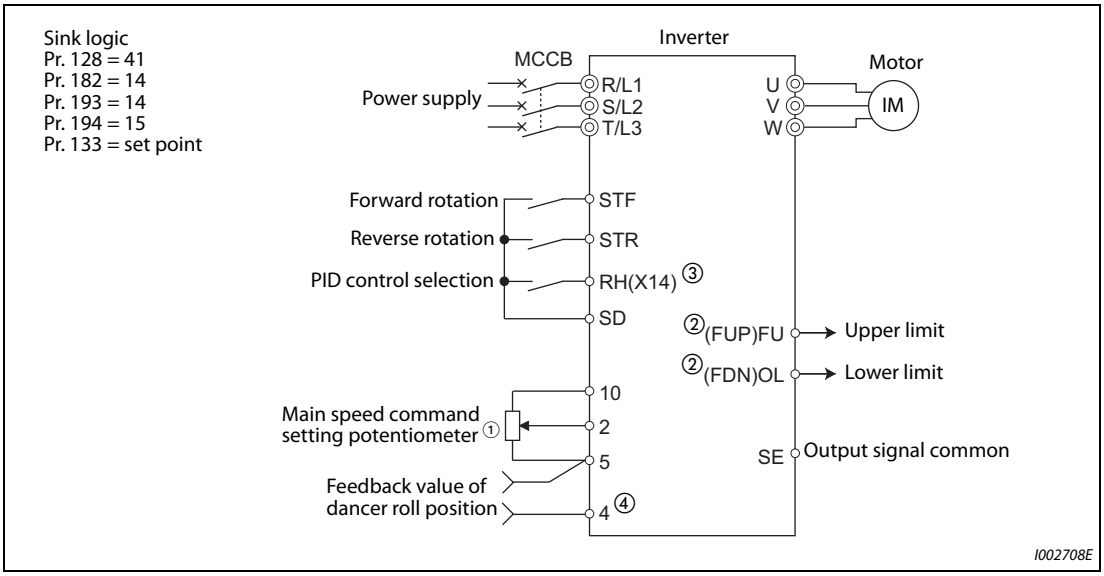


***Fig. 5-265:*** *Example in sink logic*

① The main speed command differs according to each operation mode (External, PU, communication).

② The output signal terminal to be used differs according to the Pr. 190 to Pr. 196 (Output terminal function selection) setting.

③ The input signal terminal to be used differs according to the Pr. 178 to Pr. 189 (Input terminal function selection) setting.

④ The AU signal need not be input.

### Dancer control operation selection (Pr. 128)

| Pr. 128 setting | PID action | Additive method | Set point input | Measured value input |
|---|---|---|---|---|
| 0 | PID invalid | — | — | — |
| 40 | Reverse action | Fixed | Set by Pr. 133 or Input by terminal selected by Pr. 609 ① | Input by terminal selected by Pr. 610 |
| 41 | Forward action | | | |
| 42 | Reverse action | Ratio | | |
| 43 | Forward action | | | |
| Others | Refer to page 5-504. | | | |

***Tab. 5-228:*** *PID control in dependence of parameter 128*

① When Pr. 133 ≠ "9999", the Pr. 133 setting is valid.

- To enable dancer control, set "40 to 43" in Pr. 128 "PID action selection".
- Dancer control is enabled only when the PID control valid terminal (X14) signal turns ON when "14" is set in one of Pr. 178 to Pr. 182 (Input terminal function selection) and X14 signal is assigned. When the X14 signal is not assigned, dancer control is enabled only by the Pr. 128 setting.
- Input the main speed command (External, PU, Communication). Dancer control is also supported by the main speed command in all operation modes.
- Input the set point between the terminals 2 and 5 (the setting can be selected using Pr. 133 or Pr. 609) and input the measured value signal (dancer roll position detection signal) between the inverter terminals 4 and 5 (the setting can be selected using Pr. 610).
- The action of Pr. 129 "PID action selection", Pr. 130 "PID integral time", Pr. 131" PID upper limit", Pr. 132 "PID lower limit" and Pr. 134 "PID differential time" is the same as PID control action. In the relationship between the control amount (%) and frequency in PID control, 0% and 100% are equivalent to the frequencies set to Pr. 902 and Pr. 903, respectively.

**NOTES**

When Pr. 128 is set to "0" or the X14 signal is OFF, regular inverter running not dancer control is performed.

Dancer control is enabled by turning ON/OFF the bits of terminals assigned the X14 signal by RS-485 communication or over the network.

When dancer control is selected, set the PID output suspension function (Pr. 575 "Output interruption detection time" = "9999").

When Pr. 561 "PTC thermistor protection level" ≠ "9999", terminal 2 cannot be used for the main speed command. Terminal 2 becomes the PTC thermistor input terminal.

**Selection of set point/measured value input method (Pr. 609, Pr. 610)**

- Select the set point input method by Pr. 609 "PID set point/deviation input selection" and the measured value input method by Pr. 610" PID measured value input selection". Switch the power voltage/current specifications of terminals 2 and 4 by Pr. 73 "Analog input selection" or Pr. 267 "Terminal 4 input selection" to match the specification of the input device.
- When Pr. 133 "PID action set point" ≠ "9999", Pr. 133 is the set point.
  When the set point is set at Pr. 133, the setting frequency of Pr. 902 is equivalent to 0% and the setting frequency of Pr. 903 is equivalent to 100%.

| Pr. 609, Pr. 610 settings | Input method |
|---|---|
| 1 | Terminal 1 ① |
| 2 | Terminal 2 ① |
| 3 | Terminal 4 ① |
| 4 | CC-Link communication |
| 5 | PLC function |

***Tab. 5-229:*** *Input methods*

① When the same input method has been selected for the set point and measured value at Pr. 609 and Pr. 610, set point input is invalid. (Inverter runs at set point 0%)

**NOTES**

After changing the Pr. 73 and Pr. 267 settings, check the voltage/current input switch.Incorrect setting may cause a fault, failure or malfunction.(For the details of the setting, refer to page 5-376.)

When terminals 2 and 4 are selected for deviation input, perform bias calibration using C3 and C6 to prevent a minus voltage from being entered as the deviation input signal. Input of a minus voltage might damage devices and the inverter.

- The following shows the relationship between the input values of the analog input terminals, and the set point and measured value.

| Input terminal | Inspect specification ① | Relationship with analog input | | Calibration parameter |
|---|---|---|---|---|
| | | Set point | Result | |
| Terminal 2 | 0 to 5 V | 0 V = 0%<br>5 V = 100% | 0 V = 0%<br>5 V = 100% | Pr. 125, C2 to C4 |
| | 0 to 10 V | 0 V = 0%<br>10 V = 100% | 0 V = 0%<br>10 V = 100% | |
| | 0 to 20 mA | 0 mA = 0%<br>20 mA = 100% | 0 mA = 0%<br>20 mA = 100% | |
| Terminal 1 | 0 to ±5 V | –5 V to 0 V = 0%<br>5 V = +100% | –5 V to 0 V = 0%<br>5 V = +100% | When Pr. 128 = "10"<br>Pr. 125, C2 to C4<br>When Pr. 128 ≥ "1000"<br>C12 to C15 |
| | 0 to ±10V | –10 V to 0 V = 0%<br>10 V = +100% | –10 V to 0 V = 0%<br>10 V = +100% | |
| Terminal 4 | 0 to 5 V | 0 V to 1 V = 0%<br>5 V = 100% | 0 V to 1 V = 0%<br>5 V = 100% | Pr. 126, C5 to C7 |
| | 0 to 10 V | 0 V to 2 V = 0%<br>10 V = 100% | 0 V to 2 V = 0%<br>10 V = 100% | |
| | 0 to 20 mA | 0 to 4 mA = 0%<br>20 mA = 100% | 0 to 4 mA = 0%<br>20 mA = 100% | |

***Tab. 5-230:*** *Relationship between the analog input and the set point and measured value*

① Can be changed by Pr. 73 and Pr. 267 and the voltage/current input switch. (Refer to page 5-376.)

### Selection of additive method for PID calculation result

When ratio is selected as the additive method (Pr. 128 = "42, 43"), PID calculation result × (ratio of main speed) is added to the main speed.
The ratio is determined by the Pr. 125 "Terminal 2 frequency setting gain frequency" and C2 (Pr. 902) "Terminal 2 frequency setting bias frequency" settings. In the initial status, 0 to 60 Hz is set for 0 to 100%. Thus, 60 Hz main speed is regarded as 100%, and the 30 Hz main speed is regarded as 50%.

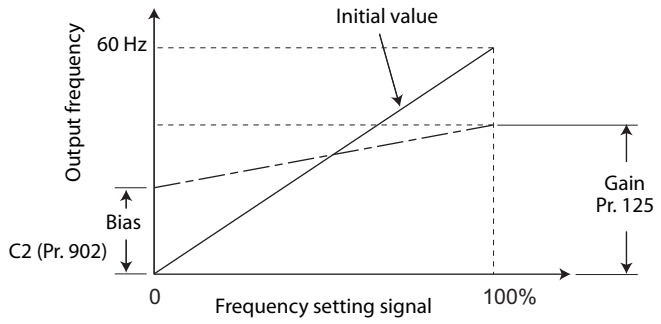


***Fig. 5-266:*** *Signal calibration at terminal 2*

**NOTES**

Even if C4 (Pr. 903) is set to other than 100%, the frequency setting signal is treated as 100%.

Even if C3 (Pr. 902) is set to other than 0%, the frequency setting signal is treated as 0%.

If C2 (Pr. 902) is set to other than 0 Hz, the frequency setting signal is 0% at the C2 (Pr. 902) frequency setting or below.

**Setting the upper and lower limits of the PID manipulated amount (Pr. 1134, Pr. 1135)**

- Set the upper and lower limits of the PID manipulated amount.
- The upper limit of the manipulated amount is the frequency obtained by adding the value resulting from frequency conversion of Pr. 1134 to the main speed.
  The lower limit of the manipulated amount is the frequency obtained by subtracting the value resulting from frequency conversion of Pr. 1135 from the main speed.

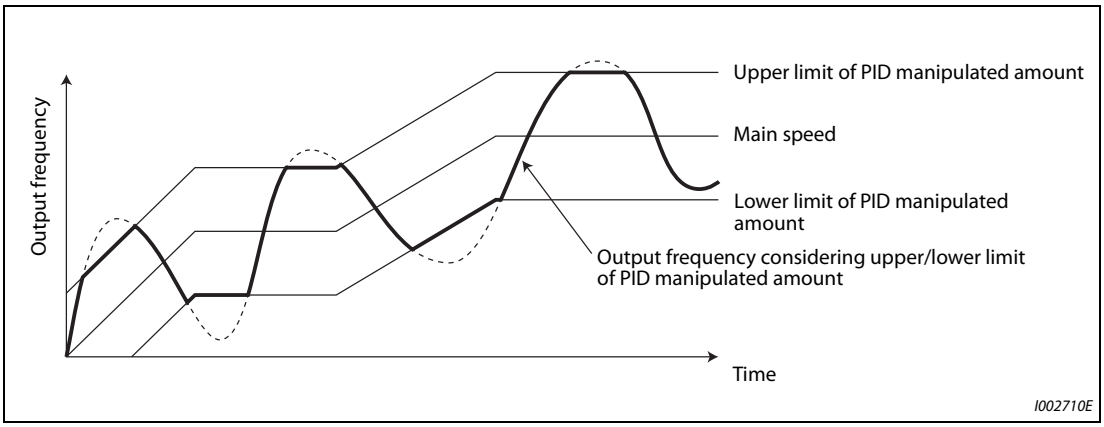


***Fig. 5-267:*** *Upper and lower limits of the PID manipulated amount*

### Input/output signals

The following signals can be used by assigning functions to Pr. 178 to Pr. 189 (Input terminal function selection) and Pr. 190 to Pr. 196 (Output terminal function selection).

- Input signal

| Signal | Function | Pr. 178 to Pr. 189 setting | Description |
|---|---|---|---|
| X14 | PID control valid terminal | 14 | When this signal is assigned to the input terminal, PID control is enabled when this signal is ON. |
| X64 | PID forward/ reverse action switchover | 64 | PID control is switched between forward and reverse action without changing parameters by turning ON this signal. |
| X72 | PID integral value reset | 72 | Integral and differential values can be reset by turning ON this signal. |

***Tab. 5-231:*** *Input signals and parameter setting*

- Output signal

| Signal | Function | Pr. 190 to Pr. 196 setting | | Description |
|---|---|---|---|---|
| | | Positive logic | Negative logic | |
| FUP | PID upper limit | 15 | 115 | Output when the measured value signal exceeds Pr. 131 "PID upper limit". (Pr. 1143 "Second PID upper limit"). |
| FDN | PID lower limit | 14 | 114 | Output when the measured value signal exceeds Pr. 132 "PID lower limit". (Pr. 1144 "Second PID lower limit"). |
| RL | PID forward/ reverse rotation output | 16 | 116 | "HI" is output when the output display of the parameter unit is forward rotation (FWD) and "LOW" is output when the display is reverse rotation (REV) and stop (STOP). |
| PID | During PID control activated | 47 | 147 | Turns ON during PID control. |

***Tab. 5-232:*** *Output signals and parameter setting*

**NOTE** Changing the terminal assignment using Pr. 178 to Pr. 189 or Pr.190 to Pr.196 may affect other functions. Set parameters after confirming the function of each terminal.

### PID monitor function

- This function displays the PID control set point and measured value on the operation panel, and can output these from the terminals FM, AM and CA.
- Set the following values to Pr. 52 "Operation panel main monitor selection", Pr. 774 to Pr. 776 (Operation panel monitor selection), Pr. 992 "Operation panel setting dial push monitor selection", Pr. 54 "FM/CA terminal function selection" and Pr. 158 "AM terminal function selection" for each monitor.

| Parameter settings | Monitor description | Minimum increment | Monitor range | | | Remarks |
|---|---|---|---|---|---|---|
| | | | Terminal FM/CA | Terminal AM | Operation panel | |
| 97 | Dancer main speed setting | 0.01 Hz | 0 to 590 Hz | | | When outputting from terminals FM, CA and AM, the full scale value can be adjusted by Pr. 55 "Frequency monitoring reference". |

***Tab. 5-233:*** *PID monitor function*

**NOTE** Refer to page 5-516 for details on other PID control monitors.

**Priority of main speed commands**

- The priority of main speed command sources when the speed command source is External is as follows:
  JOG signal > multi-speed setting signal (RL/RM/RH/REX) > pulse train input > 16bit digital input (option FR-A8AX) > analog input (terminals 2, 4, 1)
- The priority of main speed command sources when "3" is set to Pr. 79 "Operation mode selection" is as follows:
  Multi-speed setting signal (RL/RM/RH/REX) > frequency setting (digital setting by PU or operation panel)
- Even if the remote operation function is selected by Pr. 59 "Remote function selection" ≠ "0", compensation of the remote setting frequency against the main speed is ignored. (The value is "0".)
- If terminal 1 is selected for the first and second PID, terminal 1 added compensation of the main speed is invalid.
- If terminal 2 is selected for the first and second PID, the terminal 2 override function of the main speed is invalid.
- If the same terminal as an external input terminal having a speed command source (external terminal where a main speed is input) is specified as the measured value input or set point input, the main speed is treated as "0".
- Polarity reversible operation of the main speed is not possible.

**Adjustment procedure for dancer roll position detection signal**

- When the input of terminal 4 is voltage input, 0 V and 5 V (10 V) are the lower limit position and upper limit position, respectively. When it is current input, 4 mA and 20 mA are the lower limit position and upper limit position, respectively. (initial value) When the potentiometer has an output of 0 to 7 V, C7 (Pr. 905) must be calibrated at 7 V.

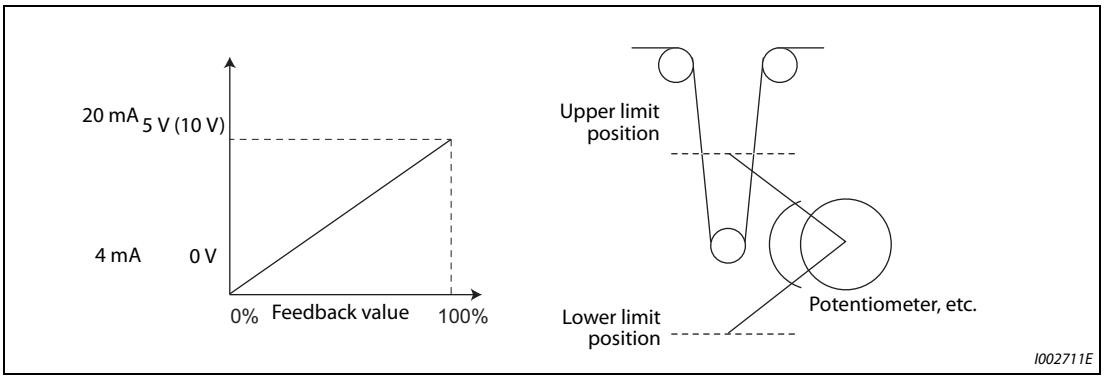


***Fig. 5-268:*** *Dancer roller position detection signal adjustment*

**Example ▽** To execute control at the dancer center position using a 0 to 7 V potentiometer

① Switch the current/voltage input selection switch to "OFF", set "2" to Pr. 267 and set terminal 4 input to voltage input.

② Input 0 V across terminals 4 and 5, and calibrate C6 (Pr. 904). (The % display that is indicated at analog calibration is not related to the % of the feedback value.)

③ Input 7 V across terminals 4 and 5, and calibrate C6 (Pr. 905). (The % display that is indicated at analog calibration is not related to the % of the feedback value.)

④ Set Pr. 133 to "50%".

△

**NOTES**

After changing the Pr. 267 setting, check the voltage/current input selection switch. Incorrect setting may cause a fault, failure or malfunction. (Refer to page page 5-376 for the setting.)

If the RH, RM, RL, or REX signal (multi-speed operation), or JOG signal is input in regular PID control, PID control is interrupted. However, at dancer control, these signals are treated as main speed commands, so PID control is continued.

During dancer control, Pr. 44 and Pr. 45 "Second deceleration time" is the parameter for setting the acceleration/deceleration time for the main speed command. This function does not function as a second function.

When the switchover mode is set by setting "6" to Pr. 79, dancer control (PID control) is invalid.

When dancer control is selected, the speed command of terminal 4 by the AU signal is invalid.

The acceleration/deceleration action of the main speed command is the same as that when the frequency is increased or decrease by analog input. For this reason,

- The SU signal sometimes stays ON even if operation is turned ON/OFF by the start signal. (The constant-speed status is maintained.)
- The DC brake operation start frequency when the start signal is turned OFF is not Pr. 10 but the smaller value between Pr. 13 and 0.5 Hz.
- The set frequency monitor is the value "main speed command + PID control" which is constantly changing.

With the main speed setting frequency setting, acceleration/deceleration is performed for the acceleration/deceleration time set at Pr. 44 and Pr. 45, and with the output frequency setting, acceleration/deceleration is performed for the acceleration/deceleration time set at Pr. 7 and Pr. 8. For this reason, with the output frequency, when the time set at Pr. 7 and Pr. 8 is longer than the time set at Pr. 44 and Pr. 45, acceleration/deceleration is performed for the acceleration/deceleration time set at Pr. 7 and Pr. 8.

The limit of the integral term is the smaller of 100% and the value after conversion of the straight line after interpolation of Pr. 1 "Maximum frequency" by Pr. 902 and Pr. 903 to the PID manipulated amount. Note, however, that the lower limit frequency limits the output frequency, but does not restrict the action of the integral item.

| **Parameters referred to** | | | |
|---|---|---|---|
| Pr. 57 | Restart coasting time | => | page 5-540 |
| Pr. 59 | Remote function selection | => | page 5-239 |
| Pr. 73 | Analog input selection | => | page 5-376 |
| Pr. 79 | Operation mode selection | => | page 5-255 |
| Pr. 178 to Pr. 189 | (input terminal function selection) | => | page 5-409 |
| Pr. 190 to Pr. 196 | (output terminal function selection) | => | page 5-350 |
| Pr. 561 | PTC thermistor protection level | => | page 5-284 |
| C2 (Pr. 902) to C7 (Pr. 905) | Frequency setting voltage (current) bias/gain | => | page 5-388 |

## 5.14.13 Automatic restart after instantaneous power failure/flying start with an induction motor V/F Magnetic flux Sensorless Vector

The inverter can be restarted without stopping the motor in the following conditions:

- when switching from commercial power supply operation over to inverter running,
- when an instantaneous power failure occurs during inverter running,
- when the motor is coasting at start.

| Pr. | Name | Initial value | Setting range | Description |
|---|---|---|---|---|
| 162<br>A700 | Automatic restart after instantaneous power failure selection | 0 | 0 | Frequency search only performed at the first start |
| | | | 1 | Reduced voltage start only at the first start (no frequency search) |
| | | | 2 | Encoder detection frequency search |
| | | | 3 | Frequency search only performed at the first start (reduced impact restart) |
| | | | 10 | Frequency search at every start |
| | | | 11 | Reduced voltage start at every start (no frequency search) |
| | | | 12 | Encoder detection frequency search at every start |
| | | | 13 | Frequency search at every start (reduced impact restart) |
| 299<br>A701 | Rotation direction detection selection at restarting | 0 | 0 | Without rotation direction |
| | | | 1 | With rotation direction |
| | | | 9999 | When Pr. 78 ="0", with rotation direction<br>When Pr. 78 ="1, 2" without rotation direction |
| 57<br>A702 | Restart coasting time | 9999 | 0 | Coasting time differs according to the inverter capacity. ① |
| | | | 0.1 to 30 s | Set the waiting time for the inverter to perform a restart at power restoration after an instantaneous power failure. |
| | | | 9999 | No restart |
| 58<br>A703 | Restart cushion time | 1 s | 0 to 60 s | Set the voltage cushion time for restart. |
| 163<br>A704 | First cushion time for restart | 0 s | 0 to 20 s | Set the voltage cushion time for restart.<br>Consider this matched to the size of the load (moment of inertia/torque) |
| 164<br>A705 | First cushion voltage for restart | 0% | 0 to 100% | |
| 165<br>A710 | Stall prevention operation level for restart | 150% | 0 to 400% | Set the stall prevention operation level at a restart operation on the assumption that the inverter rated current is 100%. |
| 611<br>F003 | Acceleration time at a restart | 9999 | 0 to 3600 s | Set the acceleration time that takes to reach Pr. 20 "Acceleration/deceleration reference frequency" setting at a restart. |
| | | | 9999 | Standard acceleration time (for example, Pr. 7) is applied as the acceleration time at restart. |

① The coasting time when Pr. 57 = "0" is as shown below. (When Pr. 162, Pr. 570 are set to the initial value.)

FR-A820-00105(1.5K) or lower and FR-A840-00052(1.5K) or lower: . . . . . 0.5 s
FR-A820-00167(2.2K) to FR-A820-00490(7.5K) and
FR-A840-00083(2.2K) to FR-A840-00250(7.5K): . . . . . 1 s
FR-A820-00630(11K) to FR-A820-03160(55K), FR-A840-00310(11K) to FR-A840-01800(55K): . 3.0 s
FR-A820-03800(75K) or higher and FR-A840-02160(75K) or higher: . . . . . 5.0 s

**NOTES**

To operate the inverter with the automatic restart after instantaneous power failure function enabled, check the following points.

Set Pr. 57 "Restart coasting time" = "0".

Turn the terminal CS (Selection of automatic restart after instantaneous power failure, flying start) ON.

**Automatic restart after instantaneous power failure function**

- The inverter output is shut off at the activation of the instantaneous power failure protection (E.IPF) or undervoltage protection (E.UVT). (Refer to page page 6-9 for E.IPF or E.UVT.)
- When E.IPF or E.UVT is activated, the instantaneous power failure (IPF)/undervoltage signal is output.
- The IPF signal is assigned to terminal IPF in the initial setting. To assign the IPF signal to a different terminal, set "2 (positive logic) or 102 (negative logic)" to any of Pr. 190 to Pr. 196 (Output terminal function selection).
- When the automatic restart after instantaneous power failure function is selected, motor restarts at the power restoration after an instantaneous power failure or undervoltage. (E.IPF and E.UVT are not activated.)

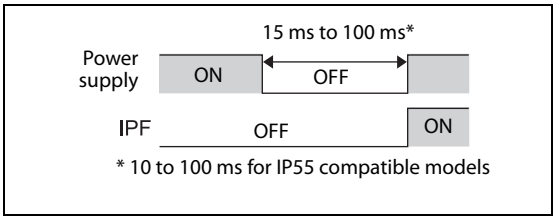


***Fig. 5-269:*** *IPF signal*

I001353E

**Connection (CS signal)**

- Restart is enabled at turn-ON of the automatic restart after instantaneous power failure/flying start (CS) signal.
- The inverter operation is disabled at turn-OFF of the CS signal while Pr. 57 "Restart coasting time" ≠ "9999" (with restart).

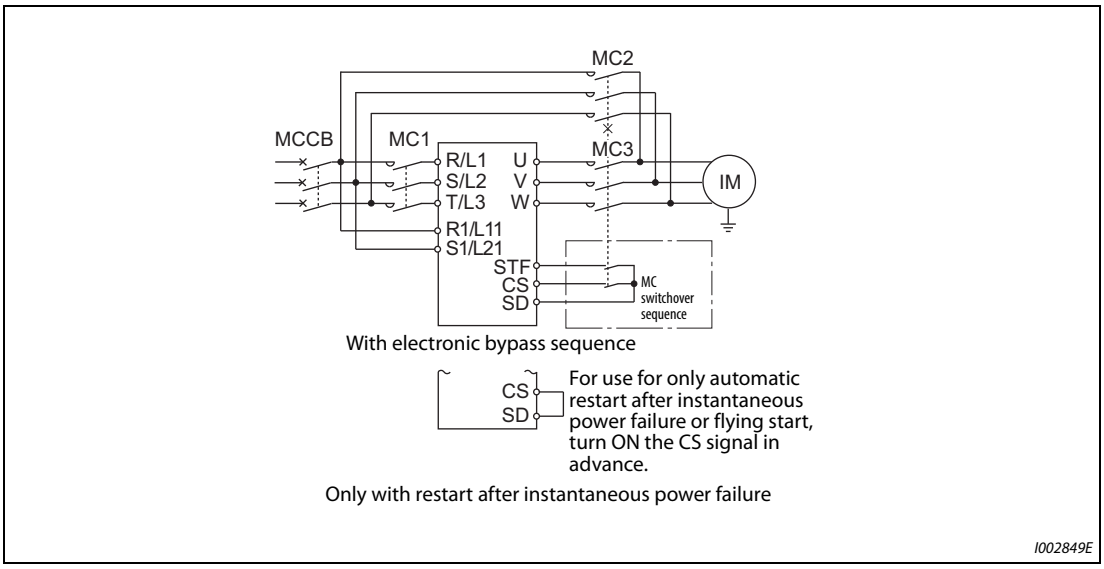


***Fig. 5-270:*** *Connection example*

- Separated converter types detect ~~an~~the instantaneous power failure on the converter unit side. Perform wiring so that the IPF signal transmitted from the converter unit is input to the terminal to which the X11 signal is assigned.
  On the converter unit side, enable the restart operation. (For setting the converter unit, refer to the Instruction Manual of the converter unit.)
- For the terminal to be used for the X10 and X11 signal, set "10" (X10), "11" (X11) in Pr. 178 to Pr. 189 and assign the function. (For separated converter types, the X10 signal is assigned to the terminal MRS in the initial setting.)
- For the X10 signal of separated converter types, NC contact input specification is selected in the initial setting. Set Pr. 599 = "0" to change the input specification to NO contact.

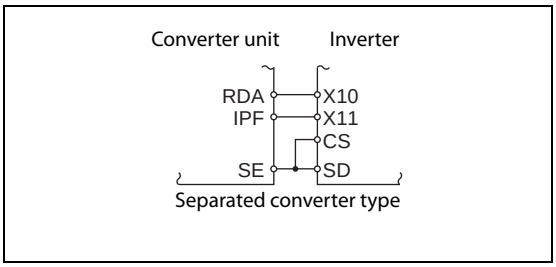


***Fig. 5-271:*** *Connecting the signals X10, X11, CS*

I002850E

**NOTES**

The CS signal is assigned to terminal CS in the initial setting. By setting "6" to any of Pr. 178 to Pr. 189 (input terminal function selection), the CS signal can be assigned to other terminals. Changing the terminal assignment using Pr. 178 to Pr. 189 may affect other functions. Set parameters after confirming the function of each terminal.

If the CS signal is not assigned to any input terminal, solely setting Pr. 57 will enable the restart operation at all times.

### Setting for the automatic restart after instantaneous power failure operation (Pr. 162)

The Pr. 162 settings and the instantaneous power failure automatic restart operation under each operation mode are as shown below.

| Pr. 162 setting | Restart operation | V/F control, Advanced magnetic flux vector control | | Real sensorless vector control | Vector control | PM sensorless vector control |
|---|---|---|---|---|---|---|
| | | Without encoder | With encoder | | | |
| 0 (initial value) | At first start | Frequency search | Frequency search | Frequency search (reduced impact restart) | Encoder detection frequency search | Frequency search for PM motor (Refer to page 5-549) |
| 1 | At first start | Reduced voltage start | Reduced voltage start | | | |
| 2 | At first start | Frequency search | Encoder detection frequency search | | | |
| 3 | At first start | Frequency search (reduced impact restart) | Frequency search (reduced impact restart) | | | |
| 10 | At every start | Frequency search | Frequency search | | | |
| 11 | At every start | Reduced voltage start | Reduced voltage start | | | |
| 12 | At every start | Frequency search | Encoder detection frequency search | | | |
| 13 | At every start | Frequency search (reduced impact restart) | Frequency search (reduced impact restart) | | | |

***Tab. 5-234:*** *Setting of Pr. 162*

### Restart operation with frequency search (Pr. 162 = "0, 3, 10, 13", Pr. 299)

- When Pr. 162 = "0 (initial value, 3, 10, 13", the motor speed is detected at a power restoration so that the motor can re-start smoothly.
- The encoder also detects the rotation direction so that the motor can re-start smoothly even during the reverse rotation.
- Whether or not to detect the rotation direction can be selected by Pr. 299 "Rotation direction detection selection at restarting".
  If the motor capacity is different from the inverter capacity, set Pr. 299 = "0 (no rotation direction detection)".
- When the rotation direction is detected, the following operation is performed according to the Pr. 78 "Reverse rotation prevention selection" setting.

| Pr. 299 setting | Pr. 78 setting | | |
|---|---|---|---|
| | 0 | 1 | 2 |
| 9999 | ○ | × | × |
| 0 (initial value) | × | × | × |
| 1 | ○ | ○ | ○ |

○: With rotation direction detection, X: Without rotation direction detection

***Tab. 5-235:*** *Rotation direction direction*

- By setting "3, 13" in Pr. 162, the restart can be made smoother with even less impact than when "0, 10" is set in Pr. 162. When the inverter is restarted with "3, 13" set to Pr. 162, offline auto tuning is required. (For details on offline auto tuning of Advanced magnetic flux vector control and Real sensorless vector control, refer to page 5-66, and for details on offline auto tuning of V/F control, refer to page 5-553.)

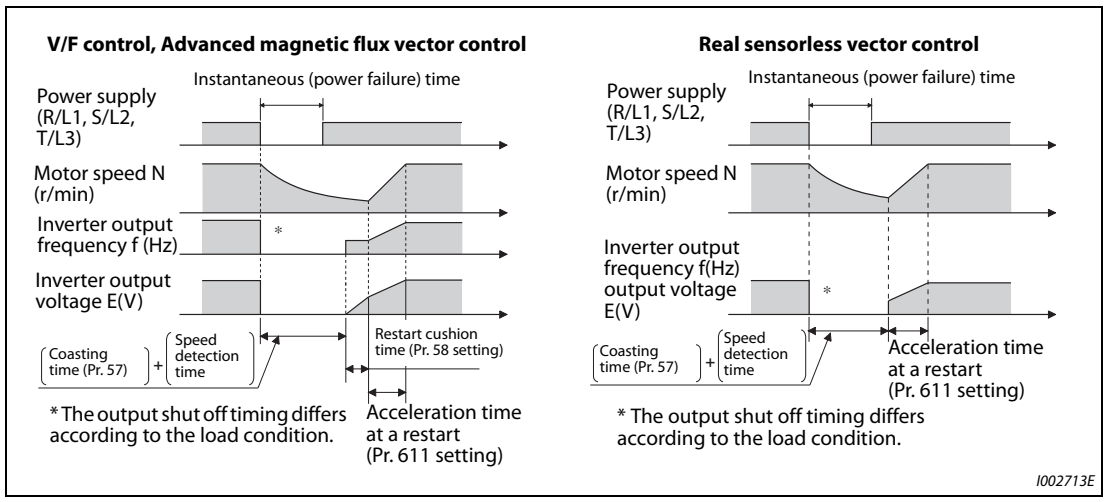


***Fig. 5-272:*** *Automatic restart in different operation modes*

**NOTES**

The rotation speed detection time (frequency search) changes according to the rotation speed of the motor. (maximum 1 s)

When the inverter capacity is two ranks or greater than the motor capacity, the overcurrent protective function (E.OC[]) is sometimes activated and prevents the inverter from restarting.

If two or more motors are connected to one inverter, this function operates abnormally. (The inverter does not restart successfully.)

Because a DC injection brake is applied instantaneously at speed detection during a restart, the speed might drop if the moment of inertia (J) of the load is small.

If reverse operation is detected when "1" (reverse rotation disabled) is set to Pr. 78, operation decelerates by reverse rotation and then changes to forward rotation when the start command is forward rotation. The inverter does not restart when the start command is reverse rotation.

When "3, 13" is set to Pr. 162, limit the wiring length to within 100 m.

**Restart operation without frequency search (Pr. 162 = "1, 11")**

When Pr. 162 = "1 or 11", reduced voltage start is used for the restart operation. In this method, the voltage is raised gradually while keeping the output frequency level at the level before the instantaneous failure, regardless of the motor's coasting speed.

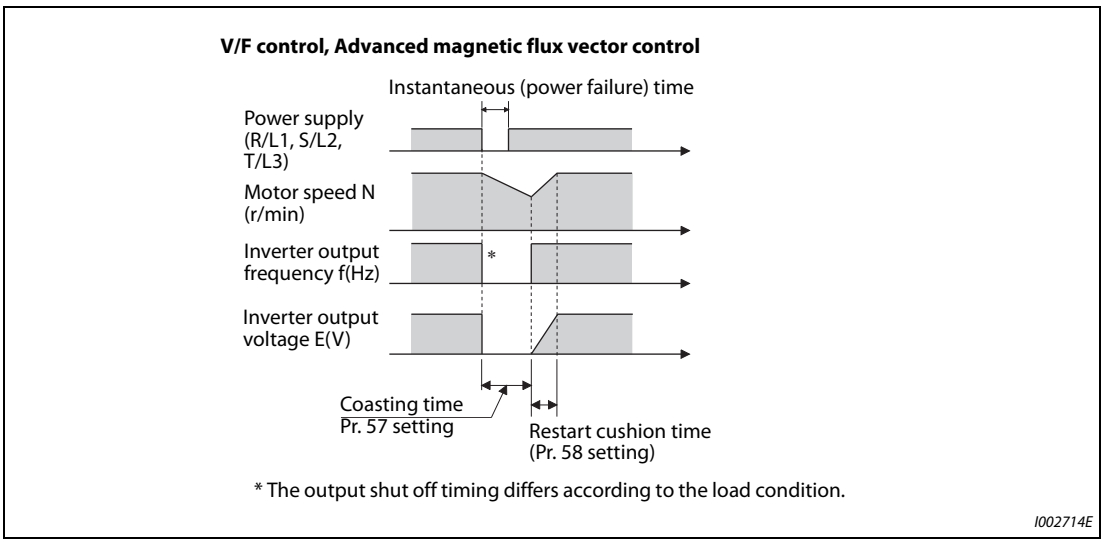


***Fig. 5-273:*** *Automatic restart without frequency search (Pr. 162 = 1/11)*

**NOTES**

This restart method uses the output frequency that was active before the instantaneous power failure stored in memory. If the instantaneous power failure time is 0.2 s or more, the output frequency can no longer be stored and held in memory, so the restart is performed from Pr. 13 "Starting frequency".

During Real sensorless vector control, Pr. 162 is set to "3 or 13" (reduced impact restart).

**Restart operation with encoder detection frequency search (Pr. 162 = "2, 12")**

- When "2, 12" is set to Pr. 162 by encoder feedback control, the inverter is restarted by the motor speed and direction of rotation that were detected by the encoder at the power restoration.
- By encoder detection frequency search, the Pr. 299 "Rotation direction detection selection at restarting" setting are invalid.

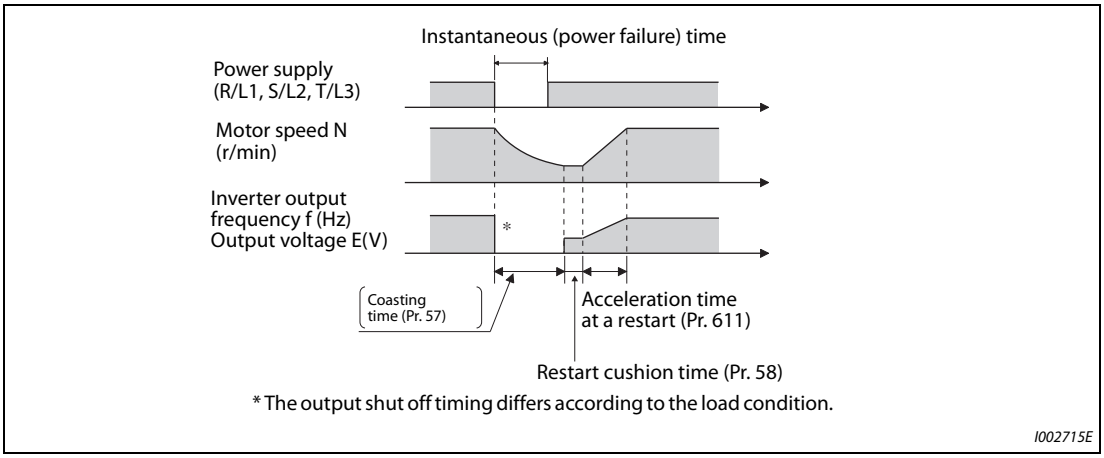


***Fig. 5-274:*** *Restart operation with encoder detection frequency search (Pr. 162 = 2/12)*

**NOTES**

If "2, 12" are set to Pr. 162 when encoder feedback control is invalid, the automatic restart is with a frequency search (Pr. 162 = "0, 10").

In vector control, encoder detection frequency search is used regardless of the Pr. 162 setting. The Pr. 58 and Pr. 299 settings are invalid at this time.

For the encoder feedback control, refer to page 5-669.

**Restart at every start (Pr. 162 = "10 to 13")**

When "10 to 13" is set in Pr. 162, a restart operation is performed at each start and automatic restart after instantaneous power failure (Pr. 57 start after the reset time has elapsed). When "0 (initial value) to 3" is set in Pr. 162, a restart operation is performed at the first start after a power-ON, and from the second power-ON onwards, a start from the starting frequency is performed.

**Automatic restart operation of MRS (X10) signal**

The restart operation after restoration from output shutoff by the MRS (X10) signal is as shown in the table below according to the Pr. 30 setting.

| Pr. 30 setting | Operation after restoration from output shutoff by the MRS (X10) signal |
|---|---|
| 2, 10, 11, 102, 110, 111 | Restart operation (starting from the coasting speed) |
| Other than the above | Starting from Pr.13 Starting frequency. |

***Tab. 5-236:*** *Operation selection after output shutoff*

**NOTES**

When output is shut off using safety stop function (terminals S1 and S2), the inverter restarts in the same way as when output is shut off by MRS (X10) signal.

### Adjustment of restart coasting time (Pr. 57)

- Coasting time is the time from the motor speed detection to the restart operation start.
- To enable restart operation, set "0" to Pr. 57 "Restart coasting time". If "0" is set to Pr. 57, the coasting time is automatically set to the following value. Generally, this setting does not interfere with inverter operation.

| Pr. 570 setting | Pr. 162 setting | 200 V class FR-A820-□ | | | | | | | | | | | | | | | | |
|---|---|---|---|---|---|---|---|---|---|---|---|---|---|---|---|---|---|---|
| | | 00046 (0.4K) | 00077 (0.75K) | 00105 (1.5K) | 00167 (2.2K) | 00250 (3.7K) | 00340 (5.5K) | 00490 (7.5K) | 00630 (11K) | 00770 (15K) | 00930 (18.5K) | 01250 (22K) | 01540 (30K) | 01870 (37K) | 02330 (45K) | 03160 (55K) | 03800 (75K) | 04750 (90K) |
| | | 400 V class FR-A840-□ | | | | | | | | | | | | | | | | |
| | | 00023 (0.4K) | 00038 (0.75K) | 00052 (1.5K) | 00083 (2.2K) | 00126 (3.7K) | 00170 (5.5K) | 00250 (7.5K) | 00310 (11K) | 00380 (15K) | 00470 (18.5K) | 00620 (22K) | 00770 (30K) | 00930 (37K) | 01160 (45K) | 01800 (55K) | 02160 (75K) | 02600 (90K) or higher |
| 0 (SLD) 1 (LD) | Other than 3, 13 | 0.5 | 0.5 | 1 | 1 | 1 | 1 | 3 | 3 | 3 | 3 | 3 | 3 | 3 | 3 | 5 | 5 | 5 |
| | 3, 13 | 1 | 1 | 2 | 2 | 2 | 2 | 3 | 3 | 3 | 3 | 3 | 3 | 3 | 3 | 5 | 5 | 5 |
| 2 (ND) | Other than 3, 13 | 0.5 | 0.5 | 0.5 | 1 | 1 | 1 | 1 | 3 | 3 | 3 | 3 | 3 | 3 | 3 | 3 | 5 | 5 |
| | 3, 13 | 1 | 1 | 1 | 2 | 2 | 2 | 2 | 3 | 3 | 3 | 3 | 3 | 3 | 3 | 3 | 5 | 5 |
| 3 (HD) | Other than 3, 13 | 0.5 | 0.5 | 0.5 | 0.5 | 1 | 1 | 1 | 1 | 3 | 3 | 3 | 3 | 3 | 3 | 3 | 3 | 5 |
| | 3, 13 | 1 | 1 | 1 | 1 | 2 | 2 | 2 | 2 | 3 | 3 | 3 | 3 | 3 | 3 | 3 | 3 | 5 |

***Tab. 5-237:*** *Restart waiting time*

- Inverter operation is sometimes hindered by the size of the moment of inertia (J) of the load or running frequency. Adjust this coasting time within the range 0.1 s to 30 s to match the load specification.
- Set the waiting time when the sine wave filter is used (Pr. 72 "PWM frequency selection" = "25") to 3 s or more.

### Restart cushion time (Pr. 58)

- The cushion time is the time takes to raise the voltage to the level required for the specified speed after the motor speed detection (output frequency before instantaneous power failure when Pr. 162 = "1 or 11").
- Normally, the motor runs at the initial value as it is. However, adjust to suit the moment of inertia (J) of the load or the size of the torque.
- Pr. 58 is invalid under Real sensorless vector control or vector control.

**Adjustment of restart operation (Pr. 163 to Pr. 165, Pr. 611)**

- The voltage cushion time at a restart can be adjusted by Pr. 163 and Pr. 164 as shown in the figure on the left.
- The stall prevention operation level at a restart operation can be set at Pr. 165.
- Using Pr. 611, the acceleration time to reach Pr. 20 "Acceleration/deceleration reference frequency" after a restart operation can be set. This can be set individually from the normal acceleration time.

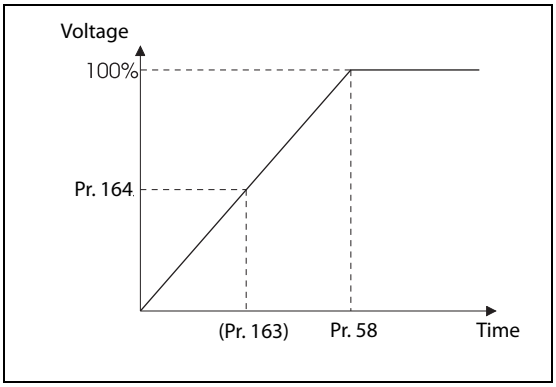


***Fig. 5-275:***
*Voltage rise at automatic restart*

**NOTES**

Pr. 163 to Pr. 165 are invalid under Real sensorless vector control and vector control.

Changing the Pr. 21 setting does not affect the Pr. 611 setting increment.

Changing the terminal assignment using Pr. 178 to Pr. 189 (input terminal function selection) may affect the other functions. Set parameters after confirming the function of each terminal.

When the restart operation is selected, undervoltage (E.UVT) and instantaneous power failure (E.IPF) of the fault output signals become invalid.

The SU and FU signals are not output during the restart. These signals are output after the restart cushion time passes.

Restart operation is also performed after the inverter reset is released or after the retry by the retry function occurs.

The automatic restart after instantaneous power failure function is invalid when the load torque high-speed frequency control (Pr. 270 = "2, 3, 13") is set.

**CAUTION:**

- ***Provide a mechanical interlock for MC1 and MC2. The inverter will be damaged if power supply is input to the inverter output section.***
- ***When the automatic restart after instantaneous power failure function is selected, the motor suddenly starts (after reset time passes) when an instantaneous power failure occurs. Stay away from the motor and machinery. Apply the supplied CAUTION stickers to easily visible places when automatic restart after instantaneous power failure has been selected.***

| Parameters referred to | | | |
|---|---|---|---|
| Pr. 7 | Acceleration time | => | page 5-225 |
| Pr. 21 | Acceleration/deceleration time increments | => | page 5-225 |
| Pr. 13 | Starting frequency | => | page 5-243, page 5-245 |
| Pr. 65, Pr. 67 to Pr. 69 | Retry function | => | page 5-297 |
| Pr. 78 | Reverse rotation prevention selection | => | page 5-273 |
| Pr. 178 to Pr. 189 | (input terminal function selection) | => | page 5-409 |

## 5.14.14 Automatic restart after instantaneous power failure/flying start with an IPM motor PM

When using the IPM motor MM-CF, the inverter operation can be restarted without stopping the motor operation.

When the automatic restart after instantaneous power failure function is selected, the motor driving is resumed in the following situations:

– When power comes back ON during inverter driving after an instantaneous power failure

– When the motor is coasting at start

| Pr. | Name | Initial value | Setting range | Description |
|---|---|---|---|---|
| 57<br>A702 | Restart coasting time | 9999 | 0 | No coasting time |
| | | | 0.1 to 30 s | Set the waiting time for the inverter to perform a restart after restoring power due to an instantaneous power failure. |
| | | | 9999 | No restart |
| 162<br>A700 | Automatic restart after instantaneous power failure selection | 0 | 0, 1, 2, 3 | Frequency search only performed at the first start |
| | | | 10, 11, 12, 13 | Frequency search at every start |
| 611<br>F003 | Acceleration time at a restart | 9999 | 0 to 3600 s | Set the acceleration time to reach Pr. 20 "Acceleration/deceleration reference frequency" at restart. |
| | | | 9999 | Standard acceleration time (for example, Pr. 7) is applied as the acceleration time at restart. |

### Automatic restart after instantaneous power failure function

- The inverter output is shut off at the activation of the instantaneous power failure protection (E.IPF) or undervoltage protection (E.UVT). (Refer to page page 6-9 for E.IPF or E.UVT.)
- When E.IPF or E.UVT is activated, the instantaneous power failure/undervoltage (IPF) signal is output.
- The IPF signal is assigned to terminal IPF in the initial status. By setting "2 (positive logic) or 102 (negative logic)" in any of Pr. 190 to Pr. 196 (output terminal function selection), the IPF signal can be assigned to another terminal.
- When the automatic restart after instantaneous power failure function is selected, motor driving is resumed at the power restoration after an instantaneous power failure or undervoltage. (E.IPF and E.UVT are not activated.)

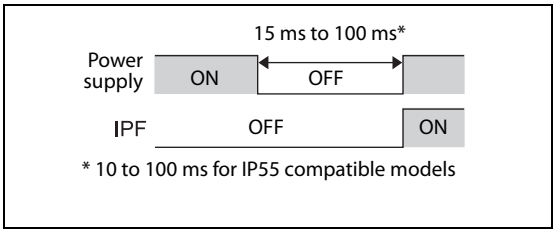


***Fig. 5-276:***
*IPF signal*

I001353E

### Connection (CS signal)

- Restart is enabled at turn-ON of the automatic restart after instantaneous power failure/flying start (CS) signal.
- The inverter operation is disabled at turn-OFF of the CS signal while Pr. 57 "Restart coasting time" ≠"9999" (with restart).

**NOTES**

The CS signal is assigned to the CS terminal in the initial status.By setting "6" in any of Pr. 178 to Pr. 189 (input terminal function selection), the signal can be assigned to another terminal. Changing the terminal assignment may affect other functions. Set parameters after confirming the function of each terminal.

If the CS signal is not assigned to any input terminal, solely setting Pr. 57 will enable the restart operation at all times.

If the restart operation is selected, instantaneous power failure protection (E.IPF) is disabled while the fault output signal is output at an instantaneous power failure.

The SU and FU signals are not output during the restart. These signals are output after the restart cushion time passes.

Restart operation is also performed after the inverter reset is released or after the retry by the retry function occurs.

The automatic restart after instantaneous power failure function is invalid when the load torque high-speed frequency control (Pr. 270 = "2, 3, 13") is set.

**Selection of restart operation (Pr. 162)**

- At a power restoration, the encoder detects the motor speed by a frequency search so that the inverter can re-start smoothly.
- The encoder also detects the rotation direction so that the inverter can re-start smoothly even during the reverse rotation.
- When "10 (11, 12, 13)" is set in Pr. 162, a restart operation is performed at each start and automatic restart after instantaneous power failure. When "0 (1, 2)" is set to Pr. 162, a restart operation is performed at the first start after a power-ON, and from the second power-ON onwards, a start from the starting frequency is performed.

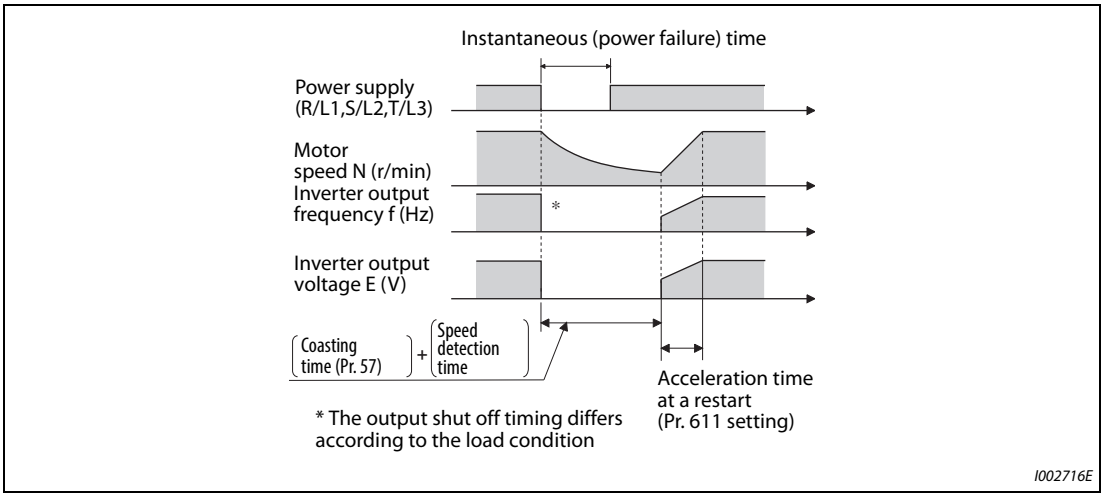


***Fig. 5-277:*** *Restart operation*

**NOTES**

Because a DC injection brake is applied instantaneously at speed detection during a restart, the speed might drop if the moment of inertia (J) of the load is small.

Restart operation with reduced voltage is not available for PM sensorless vector control.

**Restart coasting time (Pr. 57)**

- The coasting time is the time up till detection of the motor speed and start of restart control.
- To enable restart operation, set "0" (no coasting time) in Pr. 57 "Restart coasting time". Generally, this setting does not interfere with inverter operation.
- Inverter operation is sometimes hindered by the size of the moment of inertia (J) of the load or running frequency. Adjust this coasting time within the range 0.1 s to 30 s to match the load specification.

**Adjustment of restart operation (Pr. 611)**

- Using Pr. 611, the acceleration time to reach Pr. 20 "Acceleration/deceleration reference frequency" after a restart operation can be set. This can be set individually from the normal acceleration time.

**NOTES**

Changing the Pr. 21 "Acceleration/deceleration time increments" setting does not affect the Pr. 611 setting increment.

An IPM motor is a motor with interior permanent magnets. Regression voltage is generated when the motor coasts at an instantaneous power failure or at a flying start. The inverter's DC bus voltage rises if the motor coasts fast or makes a flying start in this condition.

When using the automatic restart after instantaneous power failure function (Pr. 57 ≠ "9999"), it is recommended to also use the regenerative avoidance function (Pr. 882 "Regeneration avoidance operation selection" = "1") to make startups stable. If the overvoltage protective function (E.OV□) still occurs with the regeneration avoidance function, also use the retry function (Pr. 67).

During PM sensorless vector control, the automatic restart after instantaneous power failure function operates only when an MM-CF IPM motor is connected
When a built-in brake or a regeneration unit is used, the frequency search may not be available at 2200 r/min or higher.
The restart operation cannot be performed until the motor speed drops to a frequency where the frequency search is available.

**WARNING:**

- ***An IPM motor is a motor with interior permanent magnets. High voltage is generated at motor terminals while the motor is running.***
  ***Do not touch motor terminals and other parts until the motor stops to prevent an electric shock.***
- ***When the automatic restart after instantaneous power failure function is selected, the motor suddenly starts (after reset time passes) when an instantaneous power failure occurs.***
  ***Stay away from the motor and machinery.***
  ***Apply the supplied CAUTION stickers to easily visible places when automatic restart after instantaneous power failure has been selected.***

| Parameters referred to | | | |
|---|---|---|---|
| Pr. 13 | Starting frequency | => | page 5-243, page 5-245 |
| Pr. 65, Pr. 67 to Pr. 69 | Retry function | => | page 5-297 |
| Pr. 78 | Reverse rotation prevention selection | => | page 5-273 |
| Pr. 178 to Pr. 189 | (input terminal function selection) | => | page 5-409 |
| Pr. 882 | Regeneration avoidance operation selection | => | page 5-662 |

## 5.14.15 Offline auto tuning for a frequency search V/F PM

During V/F control or when driving the IPM motor MM-CF, the accuracy of the "frequency search", which is used to detect the motor speed for the automatic restart after instantaneous power failure and flying start, can be improved.

| Pr. | Name | Initial value | Setting range | Description |
|---|---|---|---|---|
| 162<br>A700 | Automatic restart after instantaneous power failure selection | 0 | 0 | Frequency search only performed at the first start |
| | | | 1 | Reduced voltage start only at the first start (no frequency search) |
| | | | 2 | Encoder detection frequency search |
| | | | 3 | Frequency search only performed at the first start (reduced impact restart) |
| | | | 10 | Frequency search at every start |
| | | | 11 | Reduced voltage start at every start (no frequency search) |
| | | | 12 | Encoder detection frequency search at every start |
| | | | 13 | Frequency search at every start (reduced impact restart) |
| 298<br>A711 | Frequency search gain | 9999 | 0 to 32767 | The offline auto tuning automatically sets the gain required for the frequency search. |
| | | | 9999 | Uses the constant value of Mitsubishi motor (SF-JR, SF-HR, SF-JRCA, SF-HRCA, MM-CF and so on). |
| 560<br>A712 | Second frequency search gain | 9999 | 0 to 32767 | The offline auto tuning automatically sets the gain required for the frequency search of the second motor. |
| | | | 9999 | Uses the constant value of Mitsubishi motor (SF-JR, SF-HR, SF-JRCA, SF-HRCA, MM-CF and so on). |
| 96<br>C110 | Auto tuning setting/status | 0 | 0 | No offline auto tuning. |
| | | | 1, 101 | Perform offline auto tuning for the Advanced magnetic flux vector control, Real sensorless vector control, and vector control. (Refer to page 5-66.) |
| | | | 11 | Performs offline auto tuning without rotating the motor (V/F control, PM sensorless vector control (IPM motor MM-CF)). |
| 90<br>C120 | Motor constant (R1) | 9999 | 0 to 50 Ω, 9999 ① | Tuning data<br>(The value measured by offline auto tuning is automatically set.)<br>9999: Uses the constant value of Mitsubishi motor (SF-JR, SF-HR, SF-JRCA, SF-HRCA, MM-CF and so on). |
| | | | 0 to 400 mΩ, 9999 ② | |
| 463<br>C210 | Second motor auto tuning setting/status | 0 | 0 | No auto tuning for the second motor. |
| | | | 1, 101 | Performs offline auto tuning for the second motor. |
| | | | 11 | Performs offline auto tuning without rotating the motor (for IPM motor MM-CF). |
| 458<br>C220 | Second motor constant (R1) | 9999 | 0 to 50 Ω, 9999 ① | Tuning data of the second motor (same as Pr. 90) |
| | | | 0 to 400 mΩ, 9999 ② | |

① For the FR-A820-03160(55K) or lower and FR-A840-01800(55K)or lower.

② For the FR-A820-03800(75K) or higher and FR-A840-02160(75K)or higher.

**Offline auto tuning when performing a frequency search by V/F control (reduced impact restart)**

When the frequency search (reduced impact restart) is selected by setting Pr. 162 "Automatic restart after instantaneous power failure selection" = "3 or 13", perform offline auto tuning.

**Before executing offline auto tuning**

Check the following points before performing offline auto tuning:

- V/F control or PM sensorless vector control (IPM motor MM-CF) is selected.
- A motor is connected. (The motor should not be rotated by the external force applied from outside during the tuning.)
- The motor with the rated motor current equal to or less than the rated inverter current is used. (It must be 0.4 kW or higher.)
  If a motor with substantially low rated current compared with the rated inverter current is used, speed and torque accuracies may deteriorate due to torque ripples, etc. Set the rated motor current to about 40% or higher of the rated inverter current.
- The target motor is other than a high-slip motor, a high-speed motor, or a special motor.
- The motor may run slightly without actually turning during offline auto-tuning (Pr. 96 "Auto tuning setting/status" = "11"), so either firmly secure the motor by the mechanical brake or check to see if turning the motor will cause any safety problems. (Attention is required for lifts, in particular.) The motor turning slightly will not affect tuning performance.
- Offline auto tuning is not performed correctly when the surge voltage suppression filter (FR-ASF-H/FR-BMF-H) and sine wave filter (MT-BSL/BSC) are inserted between the inverter and motor. Be sure to remove them before performing tuning.

**Setting**

① Set Pr. 96 "Auto tuning setting/status" = "11".

② Set the rated motor current (initial value is inverted rated current) to Pr. 9 "Electronic thermal O/L relay". (Refer to page 5-284.)

③ Set Pr. 71 "Applied motor" according to the motor to be used.

| Motor | | Pr. 71 setting |
|---|---|---|
| Mitsubishi standard motor<br>Mitsubishi high-efficiency motor | SF-JR and SF-TH | 0 (3, 4) |
| | SF-JR 4P 1.5 kW or lower | 20 (23, 24) |
| | SF-HR | 40 (43, 44) |
| | Others | 0 (3, 4) |
| Mitsubishi constant-torque motor | SF-JRCA 4P<br>SF-TH (constant-torque) | 1 (13, 14) |
| | SF-HRCA | 50 (53, 54) |
| | Other (SF-JRC, etc.) | 1 (13, 14) |
| Mitsubishi high-performance energy-saving motor | SF-PR | 70 (73, 74) |
| Other manufacturer's standard motor | — | 0 (3, 4) |
| Other manufacturer's constant-torque motor | — | 1 (13, 14) |

***Tab. 5-238:*** *Motor selection*

**Performing tuning**

**NOTE**

Before performing tuning, check the monitor display of the operation panel (FR-DU08) or parameter unit (FR-PU07) if the inverter is in the state ready for tuning. Turning ON the start command while tuning is unavailable starts the motor.

- In the PU operation mode, press FWD/REV key on the operation panel.
  For External operation, turn ON the start command (STF signal or STR signal). Tuning will start. (At this time, excitation noise occurs.)

**NOTES**

It takes about 10 seconds for tuning to complete. (The time depends on the inverter capacity and motor type.)

Satisfy the required inverter start conditions to start offline auto tuning. For example, stop the input of MRS signal.

To force tuning to end, use the MRS or RES signal or press STOP/RESET key on the operation panel. (Turning the start signal (STF signal or STR signal) OFF also ends tuning.)

During offline auto tuning, only the following I/O signals are valid (initial value):
- Input terminals <valid signals> STP (STOP), OH, MRS, RT, RES, STF, STR, S1 and S2
- Output terminals: RUN, OL, IPF, FM/CA, AM, A1B1C1 and SO

When the rotation speed and the output frequency are selected for terminals FM/CA and AM, the progress status of offline auto tuning is output in fifteen steps from FM/CA and AM.

During execution of offline auto tuning, do not switch the second function selection signal (RT) ON or OFF. Auto tuning is not executed properly.

Since the RUN signal turns ON when tuning is started, caution is required especially when a sequence which releases a mechanical brake by the RUN signal has been designed

When executing offline auto tuning, input the run command after switching ON the main circuit power (R/L1, S/L2, T/L3) of the inverter.

While Pr. 79 "Operation mode selection" = "7", turn the PU operation external interlock (X12) signal ON to tune in the PU operation mode.

- Monitor is displayed on the operation panel (FR-DU08) and parameter unit (FR-PU07) during tuning as below.

| Status | Parameter unit (FR-PU07) display | Operation panel (FR-DU08) display |
|---|---|---|
| Setting | READ:List<br>11<br>---STOP PU | 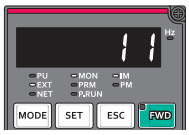 |
| Tuning in progress | TUNE 12<br>STF FWD PU | 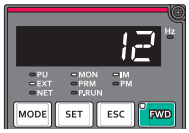 |
| Normal end | TUNE 13<br>COMPLETION<br>STF STOP PU | 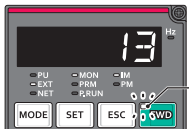 Flickering |
| Forced end | TUNE<br>ERROR 8<br>--- STOP PU | 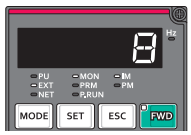 |

***Tab. 5-239:*** *Display during tuning (monitor display)*

- When offline auto tuning ends, press STOP/RESET key on the operation panel during PU operation. For External operation, turn OFF the start signal (STF signal or STR signal).
- This operation resets the offline auto tuning, and the PU's monitor display returns to the normal indication.
- (Without this operation, next operation cannot be started.)
- At tuning completion, the tuning results are set in the following parameters:

| Parameter | Name |
|---|---|
| 90 | Motor constant (R1) |
| 298 | Frequency search gain |
| 96 | Auto tuning setting/status |

***Tab. 5-240:*** *Set parameters*

**NOTE**

The motor constants measured once in the offline auto tuning are stored as parameters and their data are held until the offline auto tuning is performed again. However, the tuning data is cleared when performing all parameter clear.

- If offline auto tuning has ended in error (see the table below), motor constants are not set.

  Perform an inverter reset and restart tuning.

| Error display | Error cause | Countermeasures |
|---|---|---|
| 8 | Forced end | Set "11" to Pr. 96 and retry. |
| 9 | Inverter protective function operation | Make the setting again. |
| 91 | The current limit (stall prevention) function is activated. | Set the acceleration/deceleration time longer.<br>Set Pr. 156 "Stall prevention operation selection" = "1". |
| 92 | The converter output voltage fell to 75% of the rated value. | Check for the power supply voltage fluctuation. |
| 93 | Calculation error<br>The motor is not connected. | Check the motor wiring and make the setting again. |
| 94 | Rotation tuning frequency setting error<br>(The frequency command for the tuning was given to exceed the maximum frequency setting, or to be in the frequency jump range.) | Check the Pr. 1 "Maximum frequency "and Pr. 31 to Pr. 36 Frequency jump settings. |

***Tab. 5-241:*** *Error display*

- When tuning is ended forcibly by pressing STOP/RESET key or turning OFF the start signal (STF or STR) during tuning, offline auto tuning does not end properly. (The motor constants have not been set.)
- Perform an inverter reset and restart tuning.
- If using a motor falling under the following conditions, set the value of Pr. 9 "Electronic thermal O/L relay" as shown below after tuning is complete.
  - If the rated power supply of the motor is 200/220 V(400/440 V) 60 Hz, set the rated motor current multiplied by 1.1 in Pr. 9.
  - For a motor with a PTC thermistor, thermal protector or other thermal detection, set "0" (motor overheat protection by inverter invalid) in Pr. 9 to protect the motor from overheating.

**NOTES**

An instantaneous power failure occurring during tuning will result in a tuning error.
After power is restored, the inverter goes into the normal operation. Therefore, when STF (STR) signal is ON, the motor runs in the forward (reverse) rotation.

Any alarm occurring during tuning is handled as in the normal operation. Note that even if a retry operation has been set, retry is not performed.

The set frequency monitor displayed during the offline auto tuning is 0 Hz.

**Tuning the second applied motor (Pr. 463)**

- When performing operation where two motors are switched between one inverter, set the second motor in Pr. 450 "Second applied motor", set Pr. 463 "Second motor auto tuning setting/status" = "11", and perform tuning of the second motor.
- Turning ON the RT signal will enable the parameter settings for the second motor as shown below.

| Function | RT signal ON (second motor) | RT signal OFF (first motor) |
|---|---|---|
| Motor constant (R1) | Pr. 458 | Pr. 90 |
| Auto tuning setting/status | Pr. 463 | Pr. 96 |
| Frequency search gain | Pr. 560 | Pr. 298 |

***Tab. 5-242:*** *Turn on the RT signal to enable the parameters for the second motor*

**NOTES**

The RT signal is assigned to the terminal RT in the initial status. Set "3" in any of Pr. 178 to Pr. 189 (input terminal function selection) to assign the RT signal to another terminal.

Changing the terminal assignment using Pr. 178 to Pr. 189 (input terminal function selection) may affect the other functions. Set parameters after confirming the function of each terminal.

**CAUTION:**

- ***Note that the motor may start running suddenly.***
- ***For the offline auto tuning in vertical lift applications, etc., caution is required to avoid falling due to insufficient torque.***

| Parameters referred to | | | |
|---|---|---|---|
| Pr. 9 | Electronic thermal O/L relay | => | page 5-284 |
| Pr. 65, Pr. 67 to Pr. 69 | Retry function | => | page 5-297 |
| Pr. 71 | Applied motor | => | page 5-421 |
| Pr. 79 | Operation mode selection | => | page 5-255 |
| Pr. 156 | Stall prevention operation selection | => | page 5-83 |
| Pr. 178 to Pr. 189 | (input terminal function selection) | => | page 5-409 |

## 5.14.16 Power failure time deceleration-to-stop function

At instantaneous power failure or undervoltage, the motor can be decelerated to a stop or to the set frequency for the re-acceleration.

The power failure time deceleration stop function is available only for standard models and IP55 compatible models.

| Pr. | Name | Initial value | | Setting range | Description |
|---|---|---|---|---|---|
| | | FM | CA | | |
| 261<br>A730 ① | Power failure stop selection | 0 | | 0 | Power failure time deceleration-to-stop function disabled |
| | | | | 1, 2, 11, 12, 21, 22 | Power failure time deceleration-to-stop function enabled<br>Select action at an undervoltage or when an power failure occurs. |
| 262<br>A731 ① | Subtracted frequency at deceleration start | 3 Hz | | 0 to 20 Hz | Normally, the motor runs at the initial value as it is. However, adjust to suit the size of the load specification (moment of inertia, torque). |
| 263<br>A732 ① | Subtraction starting frequency | 60 Hz | 50 Hz | 0 to 590 Hz | When output frequency ≥ Pr. 263<br>Output frequency - deceleration from Pr. 262<br>When output frequency < Pr. 263<br>Deceleration from output frequency |
| | | | | 9999 | The motor decelerates from the "output frequency - Pr. 262". |
| 264<br>A733 ① | Power-failure deceleration time 1 | 5 s | | 0 to 3600/ 360 s ② | Set the slope applicable from the deceleration start to the Pr. 266 set frequency. |
| 265<br>A734 ① | Power-failure deceleration time 2 | 9999 | | 0 to 3600/ 360 s ② | Set the slope applicable for the frequency range starting at Pr. 266 and downward. |
| | | | | 9999 | Same as Pr. 264. |
| 266<br>A735 ① | Power failure deceleration time switchover frequency | 60 Hz | 50 Hz | 0 to 590 Hz | Set the frequency at which the slope during deceleration switches from the Pr. 264 setting to the Pr. 265 setting. |
| 294<br>A785 ① | UV avoidance voltage gain | 100% | | 0 to 200% | Adjust the response at undervoltage avoidance operation. Setting a large value improves the response to changes in the bus voltage. |
| 668<br>A786 ① | Power failure stop frequency gain | 100% | | 0 to 200% | Adjust the response level for the operation where the deceleration time is automatically adjusted. |

① The setting is available only for standard models and IP55 compatible models.

② When the Pr. 21 "Acceleration/deceleration time increments" setting is "0" (initial value), the setting range is "0 to 3600 s" and the setting increment is "0.1 s", and when it is "1", the setting range is "0 to 360 s" and the setting increment is "0.01 s".

### Connection and parameter setting

- Remove the jumpers across terminal R/L1-R1/L11 and terminal S/L2-S1/L21, and connect terminal R1/L11 to terminal P/+, and terminal S1/L21 to terminal N/–.

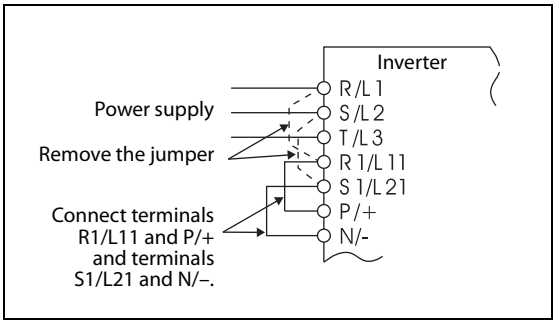


***Fig. 5-278:*** *Connection*

- If an undervoltage, power failure or input phase loss occurs when Pr. 261 "Power failure stop selection" ≠ "0", the motor decelerates to a stop.
- The power failure time deceleration stop function operates as follows at an input phase loss.

| Pr. 261 | Pr. 872 | Operation at power failure |
|---|---|---|
| 0 | 0 | Coast to stop |
| | 1 | Input phase loss (E.ILT) |
| 1, 2 | 0 | Coast to stop |
| | 1 | Deceleration stop |
| 21, 22 | — | Deceleration stop |

***Tab. 5-243:*** *Operation at power failure depending on Pr. 261 and Pr. 872*

### Outline of operation of deceleration stop at a power failure

- If an undervoltage or power failure occurs, the output frequency is turned OFF only for the frequency set to Pr. 262 "Subtracted frequency at deceleration start".
- The motor decelerates for the time set to Pr. 264 "Power-failure deceleration time 1". (The deceleration time setting is the time it takes for the motor to stop from Pr. 20 "Acceleration/deceleration reference frequency".)
- Change the deceleration time (slope) to the stop using Pr. 265 "Power-failure deceleration time" 2 when the frequency is too low to obtain the regenerative energy or in other instances.

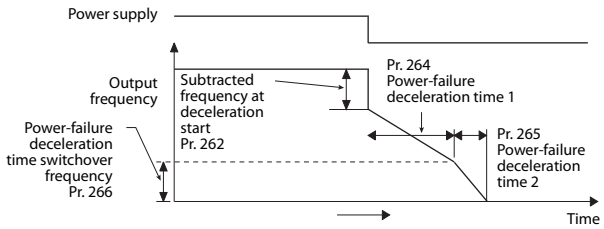


***Fig. 5-279:*** *Parameters for stop selection at power failure*

### Action setting at undervoltage and power failure

- Set Pr. 261 to select the action at an undervoltage and power failure.

| Pr. 261 Setting | Action at undervoltage and power failure | Power restoration during deceleration at occurrence of power failure | Deceleration stop time | Undervoltage avoidance function |
|---|---|---|---|---|
| 0 | Coasts to stop | Coasts to stop | — | — |
| 1 | Deceleration stop | Deceleration stop | According to Pr. 262 to Pr. 266 setting | Not used |
| 2 | | Re-acceleration | | Not used |
| 11 | | Deceleration stop | | With |
| 12 | | Re-acceleration | | With |
| 21 | | Deceleration stop | Automatic adjustment of deceleration time | Not used |
| 22 | | Re-acceleration | | Not used |

***Tab. 5-244:*** *Setting of Pr. 261*

**Power failure stop function (Pr. 261 = "1, 11, 21")**

- Even if power is restored during deceleration triggered by a power failure, deceleration stop is continued after which the inverter stays stopped. To restart operation, turn the start signal OFF then ON again.

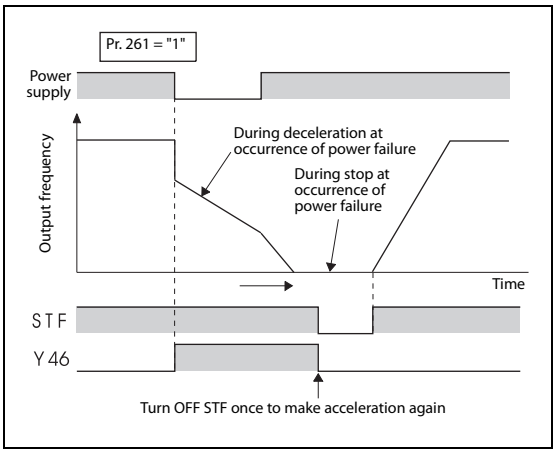


***Fig. 5-280:***
*Power restoration*

I001174E

**NOTES**

If the automatic restart after instantaneous power failure is selected (Pr. 57 "Restart coasting time" ≠ "9999") while the power failure time deceleration stop function is set enabled (Pr. 261 = "1, 11, or 21"), the power failure time deceleration stop function is disabled.

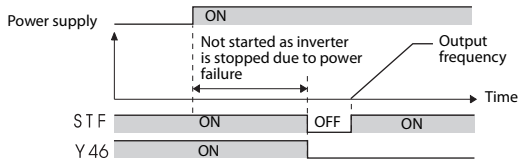


When the power failure time deceleration stop function is enabled (Pr. 261 = "1, 11, 21"), the inverter will not start even if the power is turned ON or inverter reset is performed with the start signal (STR/STF) ON. Turn OFF the start signal once and then ON again to make a start.

**Continuous operation function at instantaneous power failure (Pr. 261 = "2, 12, 22")**

- The motor re-accelerates to the set frequency if the power restores during the deceleration to stop.
- Combining with the automatic restart after instantaneous power failure function enables a power failure time deceleration stop and re-acceleration at a power restoration.
  If the power is restored after stoppage by a power failure, a restart operation is performed when automatic restart after instantaneous power failure (Pr. 57 ≠ "9999") is selected.

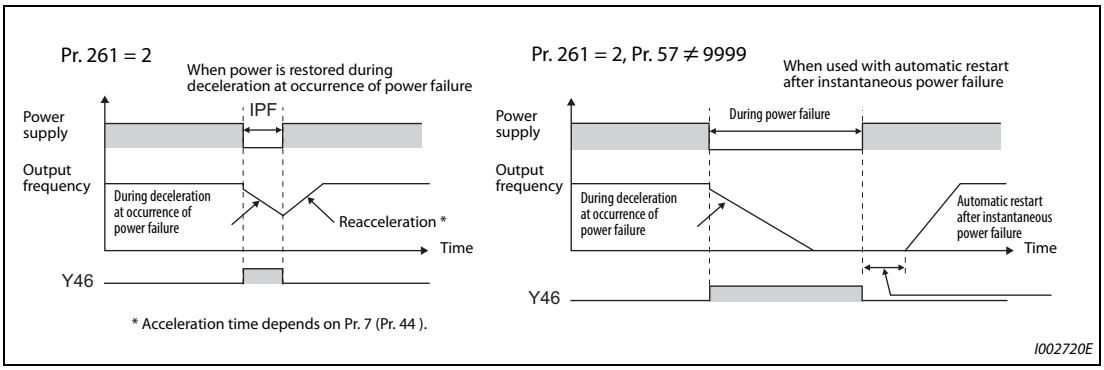


***Fig. 5-281:*** *Operation continuation at instantaneous power failure*

**Undervoltage avoidance function (Pr. 261 = "11, 12", Pr. 294)**

- If "11, 12" is set to Pr. 261, the deceleration time is adjusted (shortened) to prevent an undervoltage from occurring during deceleration at occurrence of power failure.
- Adjust the downward frequency slope and the response level using Pr. 294 "UV avoidance voltage gain". Setting a large value improves the response to the bus voltage.

**NOTE**

The undervoltage avoidance function is invalid under torque control by Real sensorless vector control. When "11 (12)" is set to Pr. 261, operation is the same as when "1 (2) is set to Pr. 261.

**Automatic adjustment of deceleration time (Pr. 261 = "21, 22", Pr. 294, Pr. 668)**

- When "21, 22" is set to Pr. 261, the deceleration time is automatically adjusted to keep (DC bus) voltage constant in the converter when the motor decelerates to a stop at a power failure. Setting of Pr. 262 to Pr. 266 is not required.
- If a phenomenon such as motor vibration occurs during operation of the deceleration time automatic adjustment function, adjust the response level by setting the Pr. 668 "Power failure stop frequency gain". Increasing the setting improves the response to change in the bus voltage. However, the output frequency may become unstable.
- If setting Pr. 294 "UV avoidance voltage gain" lower does not suppress the vibration, set Pr. 668 lower, too.

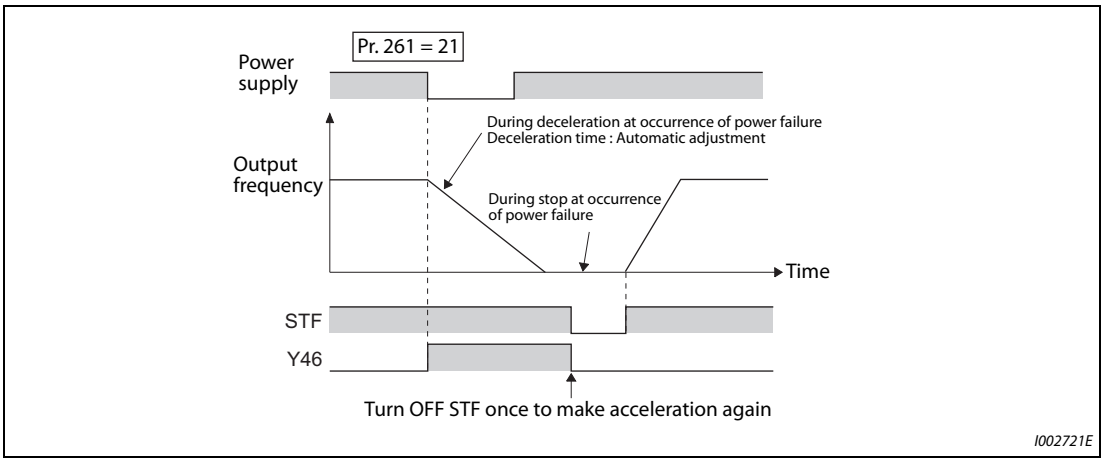


***Fig. 5-282:*** *Automatic adjustment of deceleration time*

**During deceleration at occurrence of power failure signal (Y46)**

- After deceleration by a power failure, the inverter is not restarted even though the start command is input. Check the during deceleration at occurrence of power failure signal (Y46) at a power failure. (for example, when input phase loss protection (E.ILF) occurs)
- The Y46 signal is turned ON during deceleration at occurrence of power failure and in a stop status after deceleration at a power failure.
- For the Y46 signal, assign the function by setting "46 (forward action)" or "146 (reverse action)" in any of Pr. 190 to Pr. 196 (Output terminal function selection).

**NOTES**

When "2" is set to Pr. 30 "Regenerative function selection" (for instance, when FR-HC2, FR-CV is used), the deceleration stop function is invalid at a power failure.

If the "output frequency – Pr. 262" at undervoltage or at power failure is a negative value, it is regarded as 0 Hz. (DC injection brake operation is performed without deceleration.)

The power failure time deceleration stop function is disabled during a stop or when the breaker is tripped.

The Y46 signal turns ON if an undervoltage occurs even if a deceleration at a power failure has not occurred. For this reason, the Y46 signal is sometimes output instantaneously when the power supply is turned OFF. This is not a fault.

When the power failure time deceleration stop function is selected, undervoltage protection (E.UVT), instantaneous power failure protection (E.IPF) and input phase loss protection (E.ILF) are not invalid.

When the load is high during PM sensorless vector control, an undervoltage sometimes causes the inverter to coast to a stop.

Changing the terminal assignment using Pr. 190 to Pr. 196 (output terminal function selection) may affect the other functions. Set parameters after confirming the function of each terminal.

**CAUTION:**

- ***Even if the power failure time deceleration stop function is set, some loads might cause the inverter to trip and the motor to coast.***
- ***The motor will coast if sufficient regenerative power is not obtained from the motor.***

| Parameters referred to | | | |
|---|---|---|---|
| Pr. 12 | DC injection brake operation voltage | => | page 5-640 |
| Pr. 20 | Acceleration/deceleration reference frequency | => | page 5-225 |
| Pr. 21 | Acceleration/deceleration time increments | => | page 5-225 |
| Pr. 30 | Regenerative function selection | => | page 5-652 |
| Pr. 57 | Restart coasting time | => | page 5-540, page 5-549 |
| Pr. 190 to Pr. 196 | (output terminal function selection) | => | page 5-350 |
| Pr. 872 | Input phase loss protection selection | => | page 5-296 |

## 5.14.17 PLC function

The inverter can be run in accordance with a sequence program.

In accordance with the machine specifications, a user can set various operation patterns: inverter movements at signal inputs, signal outputs at particular inverter statuses, and monitor outputs, etc.

| Pr. | Name | Initial value | Setting range | Description | | |
|---|---|---|---|---|---|---|
| 414<br>A800 | PLC function operation selection | 0 | 0 | PLC function disabled | | |
| | | | 1 | PLC function enabled | The SQ signal is enabled by input from a command source (external input terminal/communication). | |
| | | | 2 | | The SQ signal is enabled by input from an external input terminal. | |
| 415<br>A801 | Inverter operation lock mode setting | 0 | 0 | The inverter start command is enabled regardless of the operating status of the sequence program. | | |
| | | | 1 | The inverter start command is enabled only while the sequence program is running. | | |
| 416<br>A802 | Pre-scale function selection | 0 | 0 to 5 | Unit scale factor<br>0: No function<br>1: × 1<br>2: × 0.1<br>3: × 0.01<br>4: × 0.001<br>5: × 0.0001 | When the pulse train is input from terminal JOG, the number of sampled pulses can be converted.<br>The result of conversion is stored to SD1236.<br><br>"Number of sampled pulses"<br>= "input pulse value per count cycle" × "pre-scale setting value (Pr. 417)"<br>× "unit scale factor (Pr. 416)" | |
| 417<br>A803 | Pre-scale setting value | 1 | 0 to 32767 | Pre-scale setting value | | |
| 498<br>A804 | PLC function flash memory clear | 0 | 0, 9696<br>(0 to 9999) | 0: Clears the flash memory fault display (no operation after writing while the flash memory is in normal operation). | | Write |
| | | | | 9696: Clears the flash memory (no operation Write after writing during flash memory fault). | | |
| | | | | Other than 0 and 9696: Outside of the setting range | | |
| | | | | 0: Normal display | | Read |
| | | | | 1: The flash memory has not been cleared because the PLC function is enabled. | | |
| | | | | 9696: During flash memory clearing operation or flash memory fault | | |
| 1150 to 1199<br>A810 to A859 | User parameters 1to User parameters 50 | 0 | 0 to 65535 | Desired values can be set.<br>Because devices D206 to D255 used by the PLC function can be mutually accessed, the values set to Pr. 1150 to Pr. 1199 can be used by the sequence program. The result of performing calculation by a sequence program can also be monitored by Pr. 1150 to Pr. 1199. | | |

**Outline of PLC function**

- To enable the PLC function, set "1" or "2" in Pr. 414 "PLC function operation selection". When "2" is set in Pr. 414, the sequence startup (SQ) signal from the external input terminal is valid regardless of the setting of the Pr. 338 "Communication operation command source".
- Switch the execution key (RUN/STOP) of the sequence program by turning the SQ signal ON/OFF. The sequence program can be executed by turning the SQ signal ON. To input the SQ signal, set "50" in any of Pr. 178 to Pr. 189 (input terminal function selection) to assign the function to a terminal.
- When "1" is set in Pr. 415 "Inverter operation lock mode setting", the inverter can be operated only when the sequence program is running. By changing the PLC program status from RUN to STOP during inverter operation, the motor decelerates to stop.
  To stop the inverter operation at the STOP status of the PLC program while performing auto operation using SD1148 (or SM1200 to 1211) of the PLC program, set Pr. 415 = "1".

- To write sequence programs, use FR Configurator2 on a personal computer connected to the inverter through RS-485 communication or USB.

**NOTE**

For the details of the PLC function, refer to the FR-A800 PLC Function Programming Manual and [[IB(NA)-0600492ENG] and the Instruction Manual of FR Configurator2.

### Copying the PLC function project data to USB memory

- This function copies the PLC function project data to a USB memory device.
  The PLC function project data copied in the USB memory device can be copied to other inverters.
  This function is useful in backing up the parameter setting and for allowing multiple inverters to operate by the same sequence programs.
- Refer to page 2-58 for an outline of the USB communication function.

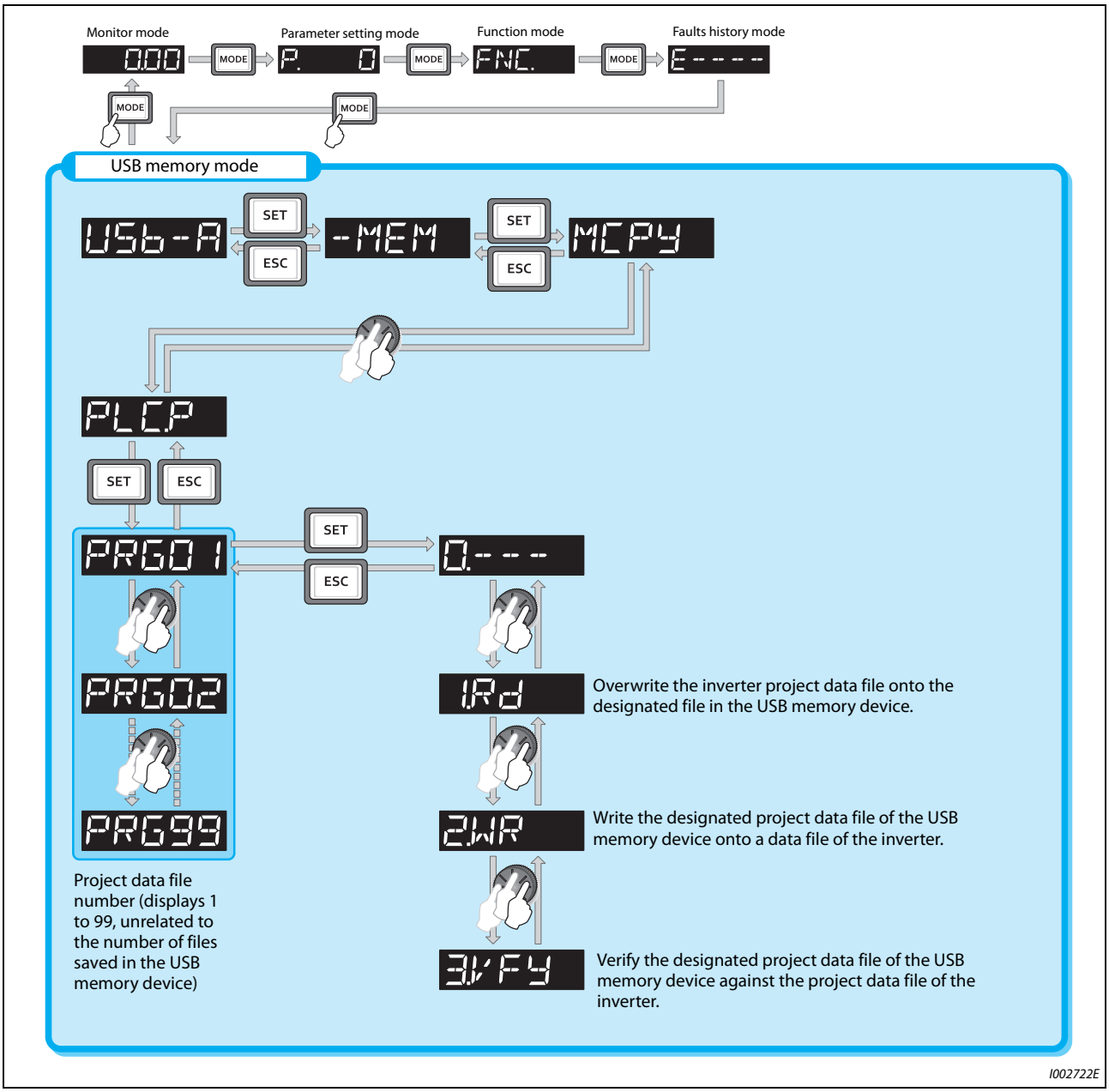


***Fig. 5-283:*** *Copying the PLC function project data to USB memory*

- The following data can be copied by copying the project data via USB memory.

| Extension | File type | Copy from inverter to USB memory | Copy from USB memory to inverter |
|---|---|---|---|
| .QPA | Parameter file | Supported | Supported |
| .QPG | Program file | Supported | Supported |
| .C32 | Function block source information | Supported | Supported |
| .QCD | Global text comment information | Supported | Supported |
| .DAT | Project management information | Supported | Not available |
| .TXT | Copy information | Supported | Not available |

***Tab. 5-245:*** *Data, that can be copied*

**NOTE**

If the project data of the PLC function is locked with a password using FR Configurator2, copying to the USB memory device and verification are disabled. Also if set to write-disabled, writing to the inverter is disabled. For the details of the PLC function, refer to the FR-A800 PLC Function Programming Manual and [[IB(NA)-0600492ENG] and the Instruction Manual of FR Configurator2.

| Parameters referred to | | | |
|---|---|---|---|
| Pr. 338 | Communication operation command source | => | page 5-266 |

## 5.14.18 Trace function

- The operating status of the inverter can be traced and saved on a USB memory device.
- Saved data can be monitored by FR Configurator2, and the status of the inverter cam be analyzed.

| Pr. | Name | Initial value | Setting range | Description |
|---|---|---|---|---|
| 1020<br>A900 | Trace operation selection | 0 | 0 | Without trace operation |
| | | | 1 | Sampling start |
| | | | 2 | Forced trigger |
| | | | 3 | Sampling stop |
| | | | 4 | Transfer of data to USB memory device |
| 1021<br>A901 | Trace mode selection | 0 | 0 | Memory mode |
| | | | 1 | Memory mode (automatic transfer) |
| | | | 2 | Recorder mode |
| 1022<br>A902 | Sampling cycle | 2 | 0 to 9 | Set the sampling cycle.<br>0: 0.125 ms, 1: 0.252 ms, 2: 1 ms, 3: 2 ms,<br>4: 5 ms, 5: 10 ms, 6: 50 ms, 7: 100 ms, 8: 500 ms, 9: 1 s<br>(Regarding the setting value "0 and 1", the cycle varies by the control mode.) |
| 1023<br>A903 | Number of analog channels | 4 | 1 to 8 | Select the number of analog channels to be sampled. |
| 1024<br>A904 | Sampling auto start | 0 | 0 | Manual sampling start |
| | | | 1 | Sampling starts automatically when the power supply is turned ON or at a reset |
| 1025<br>A905 | Trigger mode selection | 0 | 0 | Fault trigger |
| | | | 1 | Analog trigger |
| | | | 2 | Digital trigger |
| | | | 3 | Analog or digital trigger (OR logic) |
| | | | 4 | Both analog and digital trigger (AND logic) |
| 1026<br>A906 | Number of sampling before trigger | 0 to 100% | 90% | Set the percentage of the pre-trigger sampling time with respect to the overall sampling time. |
| 1027<br>A910 | Analog source selection (1ch) | 201 | 1 to 3,<br>5 to 14,<br>17 to 20,<br>22 to 24,<br>32 to 35,<br>40 to 42,<br>52 to 54,<br>61, 62, 64,<br>67, 87 to 98,<br>201 to 213,<br>222 to 227,<br>230 to 232,<br>235 to 238 | Select the analog data (monitor) to be sampled on each channel. |
| 1028<br>A911 | Analog source selection (2ch) | 202 | | |
| 1029<br>A912 | Analog source selection (3ch) | 203 | | |
| A1030<br>A913 | Analog source selection (4ch) | 204 | | |
| 1031<br>A914 | Analog source selection (5ch) | 205 | | |
| 1032<br>A915 | Analog source selection (6ch) | 206 | | |
| 1033<br>A916 | Analog source selection (7ch) | 207 | | |
| 1034<br>A917 | Analog source selection (8ch) | 208 | | |
| 1035<br>A918 | Analog trigger channel | 1 | 1 to 8 | Select the analog channel to be the trigger. |
| 1036<br>A919 | Analog trigger operation selection | 0 | 0 | Sampling starts when the value of the analog monitor exceeds the value set at the trigger level (Pr. 1037) |
| | | | 1 | Sampling starts when the value of the analog monitor falls below the value set at the trigger level (Pr. 1037) |
| 1037<br>A920 | Analog trigger level | 1000 | 600 to 1400 | Set the level at which the analog trigger turns ON.<br>The trigger level is the value obtained by subtracting 1000 from the set value. |

| Pr. | Name | Initial value | Setting range | Description |
|---|---|---|---|---|
| 1038<br>A930 | Digital source selection (1ch) | 1 | 1 to 255 | Select the digital data (I/O signal) to be sampled on each channel. |
| 1039<br>A931 | Digital source selection (2ch) | 2 | | |
| 1040<br>A932 | Digital source selection (3ch) | 3 | | |
| 1041<br>A933 | Digital source selection (4ch) | 4 | | |
| 1042<br>A934 | Digital source selection (5ch) | 5 | | |
| 1043<br>A935 | Digital source selection (6ch) | 6 | | |
| 1044<br>A936 | Digital source selection (7ch) | 7 | | |
| 1045<br>A937 | Digital source selection (8ch) | 8 | | |
| 1046<br>A938 | Digital trigger channel | 1 | 1 to 8 | Select the digital channel to be the trigger. |
| 1047<br>A939 | Digital trigger operation selection | 0 | 0 | Trace starts when the signal turns ON |
| | | | 1 | Trace starts when the signal turns OFF |

**Operation outline**

- This function samples the status (analog monitor and digital monitor) of the inverter, traces the sampling data when a trigger (trace start condition) is generated, and saves the resulting trace data.
- When the trace function is set enabled, samplings are collected and the inverter goes into the pre-trigger status.
- In the pre-trigger status, samples are collected, and the trigger standby status is entered when sufficient samples for the number of pre-trigger samples have been collected.
- When the trigger is generated in the trigger standby status, the trace is started and the trace data is saved.

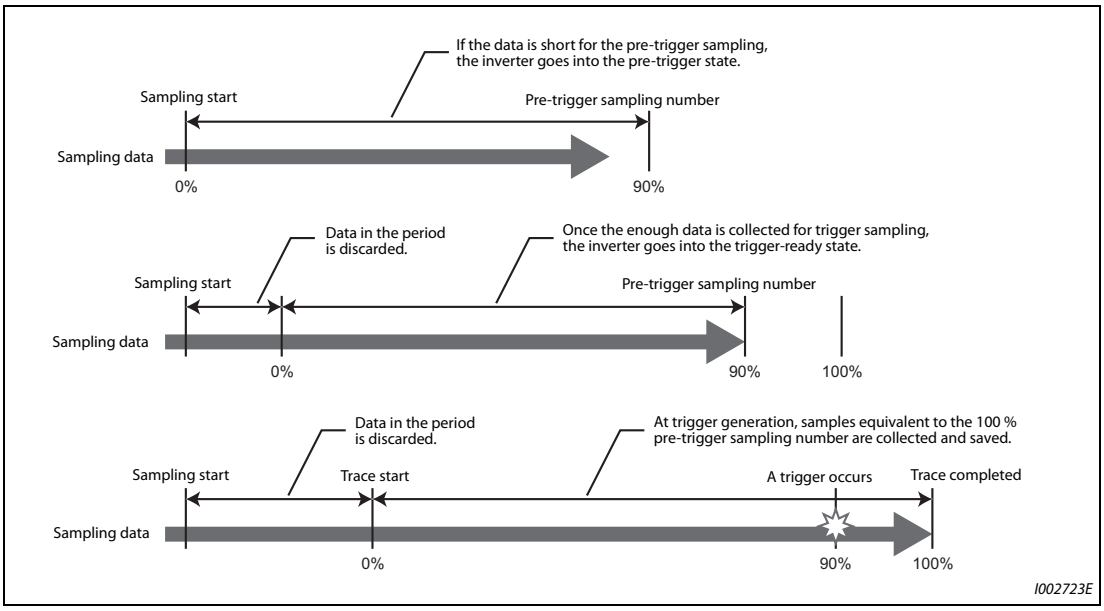


***Fig. 5-284:*** *Trace function*

### Selection of trace mode (Pr. 1021)

- Select how to save the trace data which results from sampling the inverter status.
- There are two trace data save methods, memory mode and recorder mode.

| Pr. 1021 setting | Mode | Description |
|---|---|---|
| 0 | Memory mode | In this mode, trace data is saved sequentially to internal RAM on the inverter.<br>If automatic transfer is set, the trace data in internal RAM is transferred to USB memory device when the trigger is being generated.<br>Data can be transferred to a USB memory device as long as data is held in internal RAM.<br>Trace data in internal RAM is cleared when the power supply is turned OFF or when the inverter is reset. |
| 1 | Memory mode (automatic transfer) | |
| 2 | Recorder mode | In this mode, trace data is saved directly to USB memory device.<br>Sampling data is fixed at eight analog channels and eight digital channels.<br>The sampling cycle in this mode is longer than in the memory mode. (1 ms or longer) |

***Tab. 5-246:*** *Selection of trace mode*

**NOTES**

When the trace function is used in the recorder mode, use a USB memory device having at least 1 GB of free space.

Data transferred to USB is saved in the "TRC" folder under the "FR_INV" folder.

Up to 99 sets of trace data can be saved in the USB memory device. When data transfer to USB memory device reaches 99 sets of trace data, data is successively overwritten starting with the older data.

### Setting of sampling cycle (interval) and number of sampling channels (Pr. 1022, Pr. 1023)

- Set the sampling cycle (interval).
  The shortest cycle in the recorder mode is 1 ms. When the recorder mode is set, sampling is performed at a sampling cycle of 1 ms even if "0, 1" is set to Pr. 1022 "Sampling cycle".
- When the memory mode is set, the number of analog channels to sample can be set in the Pr. 1023 "Number of analog channels". Start setting from the smaller channel number. Up to eight channels can be set. The sampling time becomes shorter the more channels are set.
  The number of channels is always 8 when the recorder mode is used or when digital channels are used.
- The sampling time differs according to the sampling cycle and number of sampling channels.

| Number of channels | Memory mode sampling time | |
|---|---|---|
| | Minimum (Pr. 1022 = "0") | Maximum (Pr. 1022 = "9") |
| 1 | 213 ms | 1704 s |
| 2 | 160 ms | 1280 s |
| 3 | 128 ms | 1024 s |
| 4 | 106.5 ms | 852 s |
| 5 | 91.8 ms | 728 s |
| 6 | 80.0 ms | 640 s |
| 7 | 71.8 ms | 568 s |
| 8 | 60 ms | 512 s |

***Tab. 5-247:*** *Memory mode sampling time*

### Analog source (monitored item) selection

- Select the analog sources (monitored items) to be set to Pr. 1027 to Pr. 1034 from the table below.

| Setting value | Monitored item ① | Minus sign display② | Triggerlevel criterion③ | Setting value | Monitored item ① | Minus sign display② | Triggerlevel criterion③ |
|---|---|---|---|---|---|---|---|
| 1 | Output frequency/speed | | ④ | 89 | Remote output value 3 | ○ | ④ |
| 2 | Output current | | ④ | 90 | Remote output value 4 | ○ | ④ |
| 3 | Output voltage | | ④ | 91 | PID manipulated variable | ○ | ④ |
| 5 | Frequency setting value/speed setting | | ④ | 92 | Second PID set point | | ④ |
| 6 | Running speed | | ④ | 93 | Second PID measured value | | ④ |
| 7 | Motor torque | | ④ | 94 | Second PID deviation | ○ | ④ |
| 8 | Converter output voltage | | ④ | 95 | Second PID measured value 2 | | ④ |
| 9⑤ | Regenerative brake duty | | ④ | 96 | Second PID manipulated variable | ○ | ④ |
| 10 | Electronic thermal O/L relay load factor | | ④ | 97 | Dancer main speed setting | | ④ |
| 11 | Output current peak value | | ④ | 98 | Control circuit temperature | ○ | ④ |
| 12 | Converter output voltage peak value | | ④ | 201 | * Output frequency (high speed) | | Pr. 84 |
| 13 | Input power | | ④ | 202 | * U Phase Output Current | ○ | ND rated current |
| 14 | Output power | | ④ | 203 | * V Phase Output Current | ○ | ND rated current |
| 17 | Load meter | | ④ | 204 | * W Phase Output Current | ○ | ND rated current |
| 18 | Motor excitation current | | ④ | 205 | * Converter Output Voltage | | ○ |
| 19 | Position pulse | | 65535 | 206 | * Output Current (all three phases) | | ND rated current |
| 20 | Cumulative energization time | | 65535 | 207 | * Excitation Current(A) | | ND rated current |
| 22 | Orientation status | | 65535 | 208 | * Torque Current(A) | | ND rated current |
| 23 | Actual operation time | | 65535 | 209 | Terminal 2 | | 100% |
| 24 | Motor load factor | | ④ | 210 | Terminal 4 | | 100% |
| 32 | Torque command | | ④ | 211 | Terminal 1 | ○ | 100% |
| 33 | Torque current command | | ④ | 212 | * Excitation Current (%) | ○ | 100% |
| 34 | Motor output | | ④ | 213 | * Torque Current (%) | ○ | 100% |
| 35 | Feedback pulse | | 65535 | 222 | Position command (lower digits) | | 65535 |
| 40 | PLC function user monitor 1 | ○ | ④ | 223 | Position command (upper digits) | ○ | 65535 |
| 41 | PLC function user monitor 2 | ○ | ④ | 224 | Current position (lower digits) | | 65535 |
| 42 | PLC function user monitor 3 | ○ | ④ | 225 | Current position (upper digits) | ○ | 65535 |
| 52 | PID set point | | ④ | 226 | Droop pulse (lower digits) | | 65535 |
| 53 | PID measured value | | ④ | 227 | Droop pulse (upper digits) | ○ | 65535 |
| 54 | PID deviation | ○ | ④ | 230 | * Output Frequency (signed) | ○ | Pr. 84 |
| 61 | Motor thermal load factor | | ④ | 231 | * Motor Speed | ○ | ⑥ |
| 62 | Inverter thermal load factor | | ④ | 232 | * Speed Command | ○ | ⑥ |
| 64 | PTC thermistor resistance | | Pr. 561 | 235 | * Torque Command | ○ | 100% |
| 67 | PID measured value 2 | | ④ | 236 | * Motor Torque | ○ | 100% |
| 87 | Remote output value 1 | ○ | ④ | 237 | * Excitation Current Command | ○ | 100% |
| 88 | Remote output value 2 | ○ | ④ | 238 | * Torque Current Command | ○ | 100% |

***Tab. 5-248:*** *Analog source (monitored item) selection*

① "*" shows a monitored item with a high-speed sampling cycle.
② "○" shows that the display with a minus sign is available.
③ Indicates a criterion at 100% when the analog trigger is set.
④ Refer to Terminal FM, CA, AM Full-scale value (page 5-331).
⑤ Monitoring is available only for standard models.
⑥ Rated motor frequency × 120 / number of motor poles

### Digital source (monitored item) selection

Select the digital sources (input/output signals) to be set to Pr. 1038 to Pr. 1045 from the table below. When a value other than the below, 0 (OFF) is applied for display.

| Setting value | Signal name | Remarks |
|---|---|---|
| 0 | — | — |
| 1 | STF | For the details of the signals, refer to page 5-409. |
| 2 | STR | |
| 3 | AU | |
| 4 | RT | |
| 5 | RL | |
| 6 | RM | |
| 7 | RH | |
| 8 | JOG | |
| 9 | MRS | |
| 10 | STP (STOP) | |
| 11 | RES | |
| 12 | CS | |
| 21 | X0 | For the details of the signals, refer to the Instruction Manual of FR-A8AX (option). |
| 22 | X1 | |
| 23 | X2 | |
| 24 | X3 | |
| 25 | X4 | |
| 26 | X5 | |
| 27 | X6 | |
| 28 | X7 | |
| 29 | X8 | |
| 30 | X9 | |
| 31 | X10 | |
| 32 | X11 | |
| 33 | X12 | |
| 34 | X13 | |
| 35 | X14 | |
| 36 | X15 | |
| 37 | DY | |

| Setting value | Signal name | Remarks |
|---|---|---|
| 101 | RUN | For the details of the signals, refer to page 5-350. |
| 102 | SU | |
| 103 | IPF | |
| 104 | OL | |
| 105 | FU | |
| 106 | ABC | |
| 107 | ABC2 | |
| 121 | DO0 | For the details of the signals, refer to the Instruction Manual of FR-A8AY (option). |
| 122 | DO1 | |
| 123 | DO2 | |
| 124 | DO3 | |
| 125 | DO4 | |
| 126 | DO5 | |
| 127 | DO6 | |
| 128 | RA1 | For the details of the signals, refer to the Instruction Manual of FR-A8AR (option). |
| 129 | RA2 | |
| 130 | RA3 | |

***Tab. 5-249:*** *Digital source (monitored item) selection*

### Trigger setting (Pr. 1025, Pr. 1035 to Pr. 1037, Pr. 1046, Pr. 1047)

- Set the trigger generating conditions and trigger target channels.

| Pr. 1025 setting | Trigger generating conditions | Selection of trigger target channel |
|---|---|---|
| 0 | Trace starts when inverter enters an fault status (protective function activated) | — |
| 1 | Trace starts when analog monitor satisfies trigger conditions | Pr. 1035 |
| 2 | Trace starts when digital monitor satisfies trigger conditions | Pr. 1046 |
| 3 | Trace starts when either of analog or digital monitor satisfies trigger conditions (OR) | Pr. 1035, Pr. 1046 |
| 4 | Trace starts when both of analog or digital monitor satisfies trigger conditions (AND) | Pr. 1035, Pr. 1046 |

***Tab. 5-250:*** *Trigger setting*

- Set the trigger generation conditions for the analog monitor.

| Pr. 1036 setting | Trigger generation conditions | Trigger level setting |
|---|---|---|
| 0 | Sampling starts when the analog data targeted for the trigger exceeds the value specified at the trigger level | Set the trigger level by Pr. 1037 (–400% to 400%) ① |
| 1 | Sampling starts when the analog data targeted for the trigger has fallen below the value specified at the trigger level | |

***Tab. 5-251:*** *Trigger generation conditions for the analog monitor*

① For Pr. 1037, set the number obtained by adding 1,000 to the trigger level.

- Set the trigger generation conditions for the digital monitor.

| Pr. 1047 setting | Trigger generation conditions |
|---|---|
| 0 | Trace starts when the digital data targeted for the trigger turns ON |
| 1 | Trace starts when the digital data targeted for the trigger turns OFF |

***Tab. 5-252:*** *Trigger generation conditions for the digital monitor*

**Start of sampling and copying of data (Pr. 1020, Pr. 1024)**

- Set the trace operation. The trace operation is set by one of two ways, by setting Pr. 1020 "Trace operation selection" and by setting in the trace mode on the operation panel.
- When "1" is set in Pr. 1020, sampling is started.
- When "2" is set in Pr. 1020, a trigger is regarded as having been generated (for instance, a forced trigger), sampling is stopped and the trace is started.
- When "3" is set in Pr. 1020, sampling is stopped.
- When "4" is set in Pr. 1020, the trace data in internal RAM is transferred to a USB memory device. (Trace data cannot be transferred during sampling.)
- To automatically start sampling when the power supply is turned ON or at a recovery after an inverter reset, set "1" to Pr. 1024 "Sampling auto start".

| Pr. 1020 setting | Setting by trace mode | Operation |
|---|---|---|
| 0 | 0.- - - - | Sampling standby |
| 1 | 1.RUN | Sampling start |
| 2 | 2.TRG | Forced trigger (sampling stop) |
| 3 | 3.END | Sampling stop |
| 4 | 4.CPY | Data transmission |

***Tab. 5-253:*** *Trace mode settings*

- Trace operation can also be set in the trace mode on the operation panel.

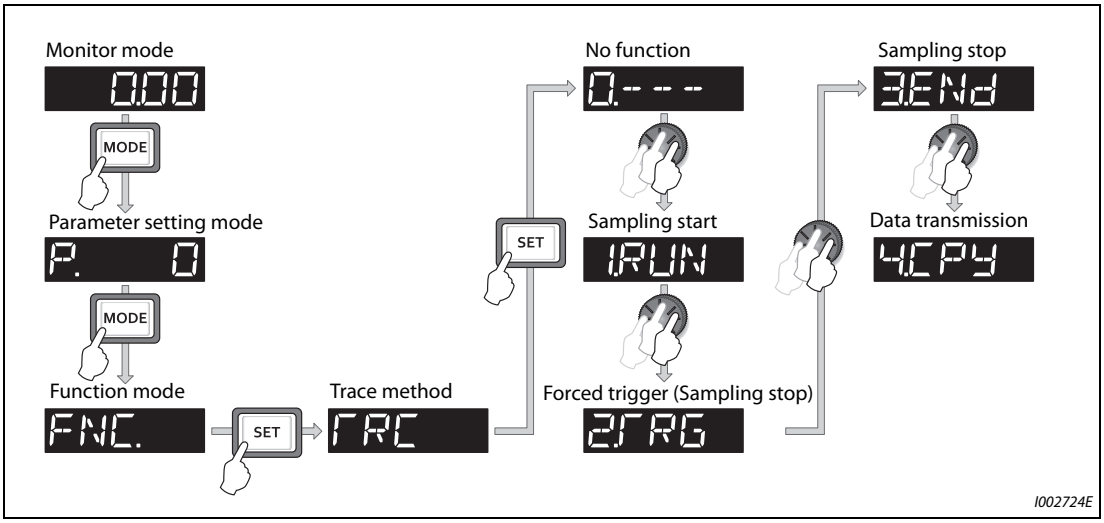


***Fig. 5-285:*** *Selection of the trace mode settings*

**Selection of trace operation by input terminal (TRG signal, TRC signal)**

- Trace operation can be selected by signal inputs.
- A forced trigger can be applied when the Trace trigger input (TRG) signal is ON.
- Sampling is started and stopped by the Trace sampling start/end (TRC) signal turning ON and OFF, respectively.
- To input the TRG signal, set "46" in any of Pr. 178 to Pr. 189 (input terminal function selection), and to input the TRC signal, set "47" to assign the function to a terminal.

**NOTE**

Changing the terminal assignment using Pr. 178 to Pr. 189 (input terminal function selection) may affect the other functions. Set parameters after confirming the function of each terminal.

### Monitoring the trace status

- The trace status can be monitored on the operation panel by setting "38" in Pr. 52 "Operation panel main monitor selection", Pr. 774 to Pr. 776 (Operation panel monitor selection), or Pr. 992 "Operation panel setting dial push monitor selection".

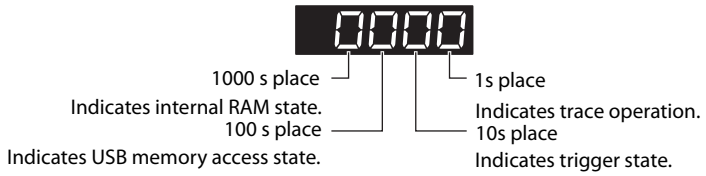


***Fig. 5-286:*** *Monitoring the trace status*

| Monitor value | Trace status | | | |
|---|---|---|---|---|
| | **1000s place** | **100s place** | **10s place** | **1s place** |
| 0 or no display ① | No trace data in internal RAM | USB memory not accessed | Trigger not detected | Trace stopped |
| 1 | Trace data in internal RAM | USB memory being accessed | Trigger detected | Trace operation |
| 2 | — | USB memory transfer error | — | — |
| 3 | — | USB buffer overrun | — | — |

***Tab. 5-254:*** *Trace status*

① The "0(s)" to the left of the leftmost non-zero digit is(are) not shown in the monitor display.
For example, if no trace data is in internal RAM, the USB memory is not accessed, no trigger is detected, and the trace operation is performed, "1" appears (not "0001").

- When copying the traced data to a USB memory device, the operating status of the USB host can be checked with the inverter LED. For the overview of the USB communication function, refer to page 2-58.

| LED status | Operating status |
|---|---|
| OFF | No USB connection. |
| ON | The communication is established between the inverter and the USB device. |
| Flickering rapidly | Traced data is being transmitted. (In the memory mode, transmission command is being issued. In the recorder mode, sampling is being performed.) |
| Flickering slowly | Error in the USB connection. |

***Tab. 5-255:*** *Operating status of the USB host*

- During trace operation, the trace status signal (Y40) can be output.
  To use the Y40 signal, set "40 (positive logic) or 140 (negative logic)" in any of Pr. 190 to Pr. 196 (output terminal function selection) to assign the function to the output terminal.

**NOTE**

Changing the terminal assignment using Pr. 190 to Pr. 196 (output terminal function selection) may affect the other functions. Set parameters after confirming the function of each terminal.

| Parameters referred to | | | |
|---|---|---|---|
| Pr. 52 | Operation panel main monitor selection | => | page 5-317 |
| Pr. 178 to Pr. 189 | (input terminal function selection) | => | page 5-409 |

# 5.15 (N) Operation via communication and its settings

| Purpose | Parameter to set | | | Refer to page |
|---|---|---|---|---|
| To start operation via communication | Initial setting of operation via communication | P.N000, P.N001, P.N013, P.N014 | Pr. 549, Pr. 342, Pr. 502, Pr. 779 | 5-583 |
| To operate via communication from PU connector | Initial setting of computer link communication (PU connector) | P.N020 to P.N028 | Pr. 117 to Pr. 124 | 5-587 |
| To operate via communication from RS-485 terminals | Initial setting of computer link communication (RS-485 terminals) | P.N030 to P.N038 | Pr. 331 to Pr. 337, Pr. 341 | |
| | Modbus-RTU communication specification | P.N002, P.N030, P.N031, P.N034, P.N080, | Pr. 539, Pr. 331, Pr. 332, Pr. 334, Pr. 343, | 5-607 |
| To Communicate using USB (FR Configurator2) | USB communication | P.N040, P.N041 | Pr. 547, Pr. 548 | 5-587 |
| To connect a GOT | GOT automatic recognition | P.N020, P.N030 | Pr.117, Pr.331 | 5-626 |

## 5.15.1 Wiring and configuration of PU connector

Using the PU connector enables communication operation from a personal computer, etc.

When the PU connector is connected with a personal, FA or other computer by a communication cable, a user program can run and monitor the inverter or read and write to parameters.

### PU connector pin-outs

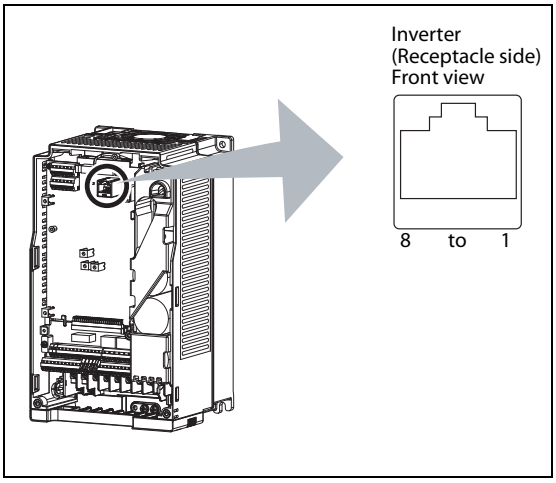


***Fig. 5-287:*** *PU connector pin-outs*

| Pin number | Name | Description |
|---|---|---|
| 1 | SG | Earth (ground) (connected to terminal 5) |
| 2 | — | Operation panel power supply |
| 3 | RDA | Inverter receive+ |
| 4 | SDB | Inverter send- |
| 5 | SDA | Inverter send+ |
| 6 | RDB | Inverter receive- |
| 7 | SG | Earth (ground) (connected to terminal 5) |
| 8 | — | Operation panel power supply |

***Tab. 5-256:*** *PU connector (terminal description)*

**NOTES**

Pins No. 2 and 8 provide power to the operation panel or parameter unit. Do not use these pins during RS-485 communication.

Do not connect the PU connector to the computer's LAN board, FAX modem socket or telephone modular connector. The product could be damaged due to differences in electrical specifications.

**Wiring and configuration of PU connector communication system**

System configuration

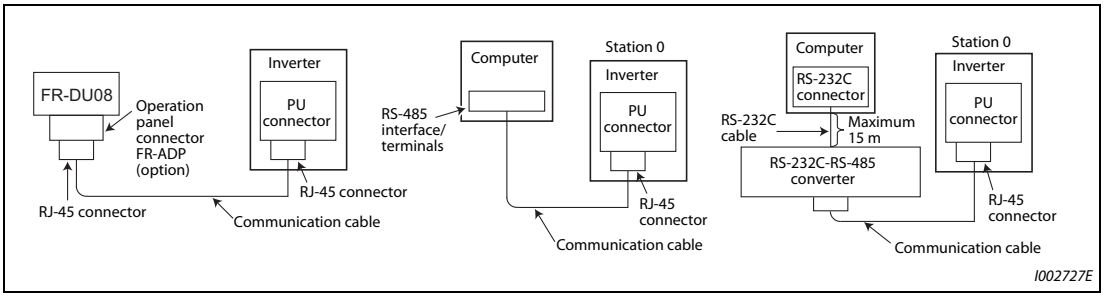


***Fig. 5-288:*** *Connecting to the PU connector*

● Wiring of computer by RS-485

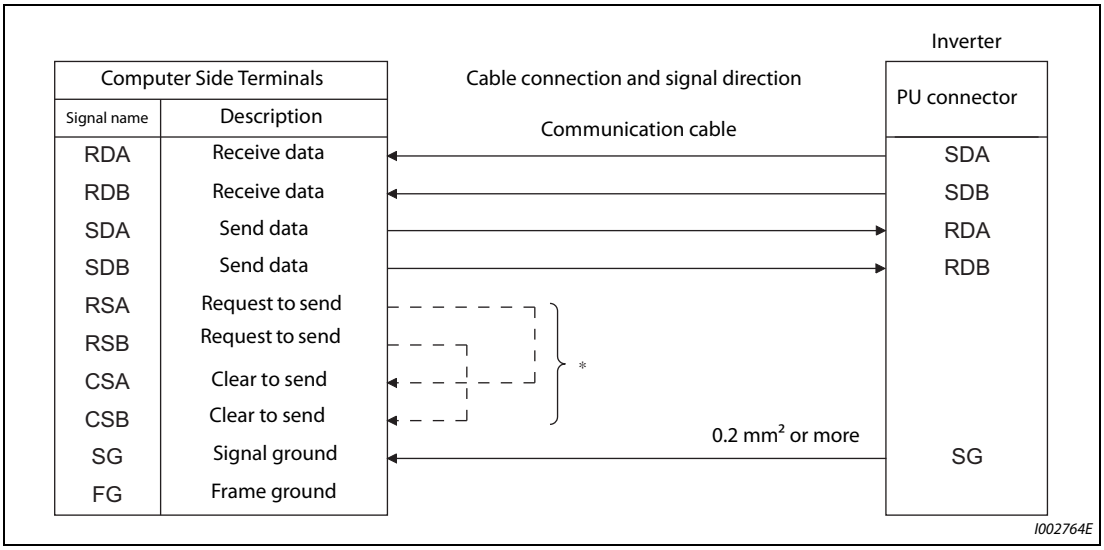


***Fig. 5-289:*** *Connection to an inverter*

* Make connection in accordance with the Instruction Manual of the computer to be used with. Fully check the terminal numbers of the computer since they vary with the model.

**NOTES**

When performing RS-485 communication with multiple inverters, use the RS-485 terminals. (Refer to page 5-581.)

Computer-inverter connection cable
Refer to the following for the connection cable (RS-232C ⇔ RS-485 converter) between the computer with an RS-232C interface and an inverter.
Commercially available products (as of February 2012)

| Model | Manufacturer |
|---|---|
| Interface embedded cable<br>DAFXIH-CAB (D-SUB25P for personal computer side)<br>DAFXIH-CABV (D-SUB9P for personal computer side)<br>+<br>Connector conversion cable DINV-485CAB (for inverter side) ① | Diatrend Corp. |
| Interface embedded cable dedicated for inverter<br>DINV-CABV ① | |

① The conversion cable cannot connect multiple inverters. (The computer and inverted are connected in a 1:1 pair.) This product is a RS-232C ⇔ RS-485 conversion cable that has a built-in converter. No additional cable or connector is required. For the product details, contact the manufacturer.

Refer to the following table when fabricating the cable on the user side.
Commercially available products (as of February 2012)

| Name | Model | Manufacturer |
|---|---|---|
| Communication cable | SGLPEV-T (Cat5e/300m) 24AWG × 4P ② | Mitsubishi Cable Industries, Ltd. |
| RJ-45 connector | 5-554720-3 | Tyco Electronics |

② Do not use pins No. 2 and 8 of the communication cable.

## 5.15.2 Wiring and configuration of RS-485 terminals

### RS-485 terminal layout

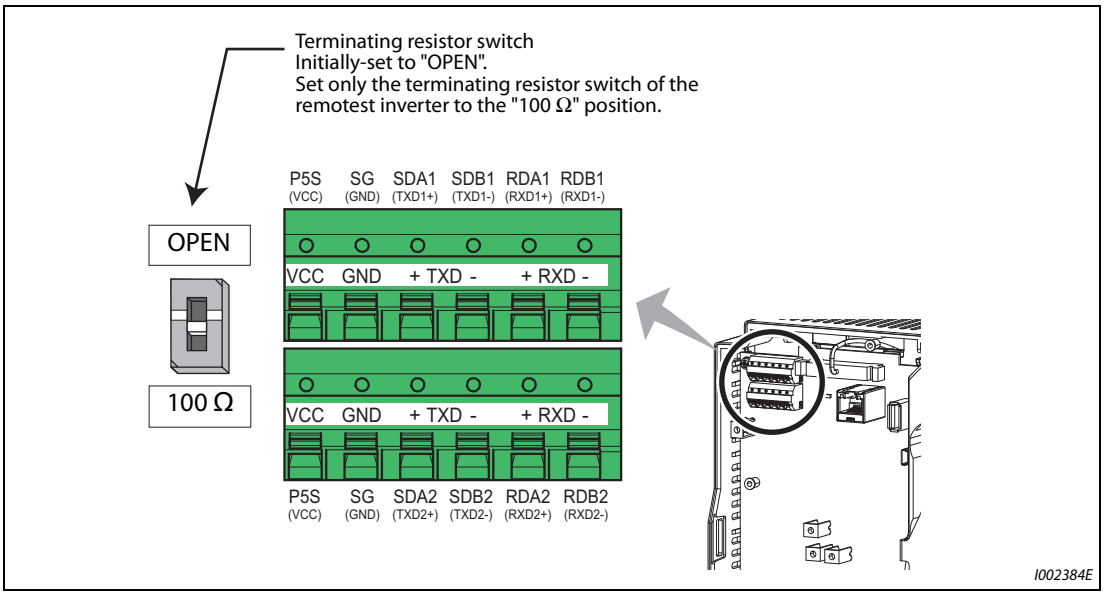


***Fig. 5-290:*** *RS-485 terminals layout*

| Name | Description |
|---|---|
| RDA1 (RXD1+) | Inverter receive + |
| RDB1 (RXD1 –) | Inverter receive – |
| RDA2 (RXD2+) | Inverter receive + (for branch) |
| RDB2 (RXD2 –) | Inverter receive – (for branch) |
| SDA1 (TXD1+) | Inverter send + |
| SDB1 (TXD1–) | Inverter send – |
| SDA2 (TXD2+) | Inverter send + (for branch) |
| SDB2 (TXD2 –) | Inverter send –(for branch) |
| P5S (VCC) | 5 V<br>Permissible load current 100 mA |
| SG (GND) | Earthing (grounding)<br>(connected to terminal SD) |

***Tab. 5-257:*** *RS-485 terminal description*

**Connection of RS-485 terminals and wires**

The size of RS-485 terminal block is the same as the control circuit terminal block. Refer to page 2-43 for the wiring method.

**NOTES**

To avoid malfunction, keep the RS-485 terminal wires away from the control circuit board.

When the FR-A820-01250(22K) or lower, or the FR-A840-00620(22K) or lower is used with a plug-in option, lead the wires through the hole on the side face of the front cover for wiring of the RS-485 terminals.

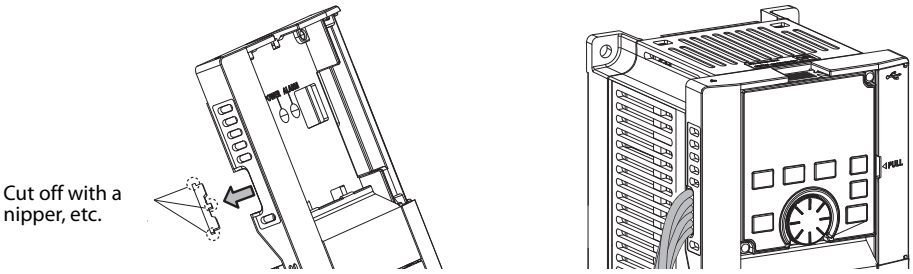


When the FR-A820-01540(30K) of higher, or the FR-A840-00770(30K) or higher is used with a plug-in option, lead the wires on the left side of the plug-in option for wiring of the RS-485 terminals.

### System configuration of RS-485 terminals

- Computer and inverter connection (1:1)

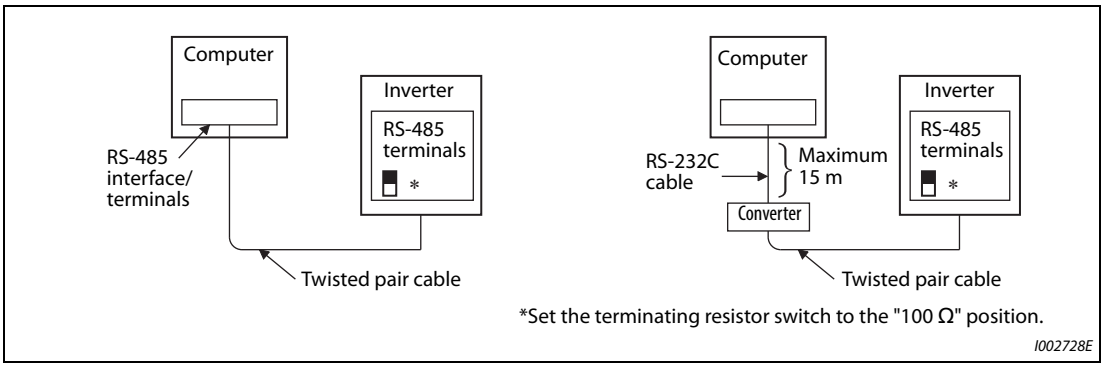


***Fig. 5-291:*** *Connection of a computer to one inverter*

- Combination of computer and multiple inverters (1:n)

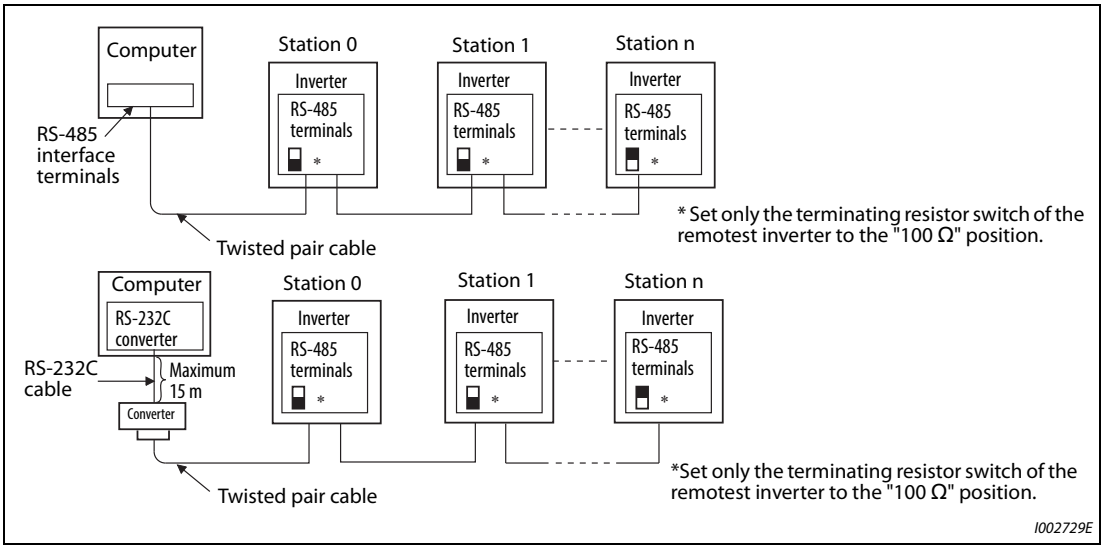


***Fig. 5-292:*** *Connection of a computer to several inverters*

### How to wire RS-485 terminals

- 1 inverter and 1 computer with RS-485 terminals

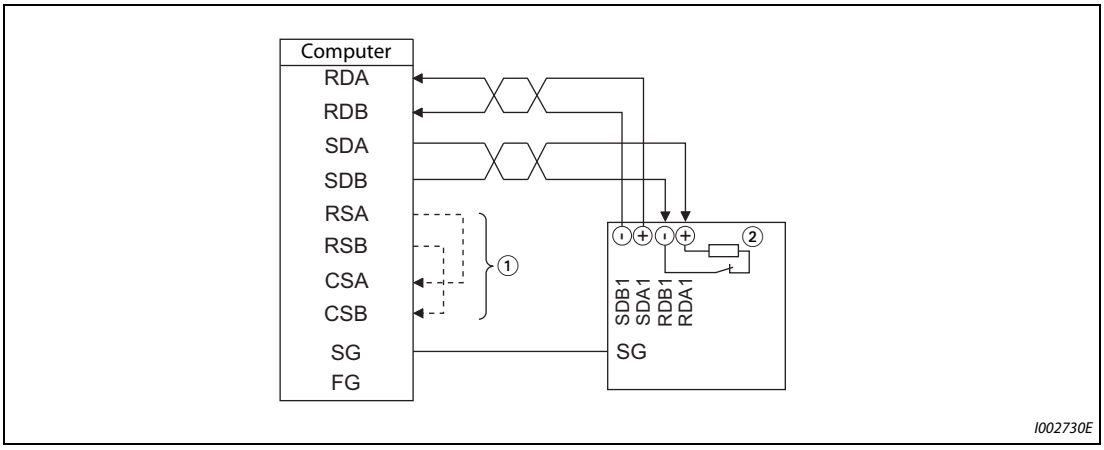


***Fig. 5-293:*** *Connection to one inverter*

● Multiple inverters and 1 computer with RS-485 terminals

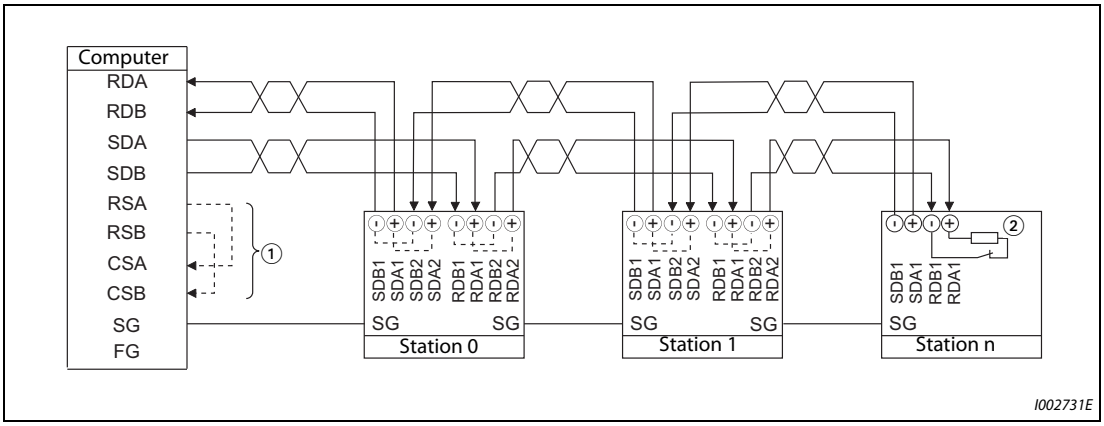


***Fig. 5-294:*** *Connection to several inverter*

① Make connection in accordance with the Instruction Manual of the computer to be used with. Fully check the terminal numbers of the computer since they vary with the model.

② For the inverter farthest from the computer, set the terminating resistor switch to ON (100 Ω side).

**NOTE**

For branching, connect the wires as shown below.

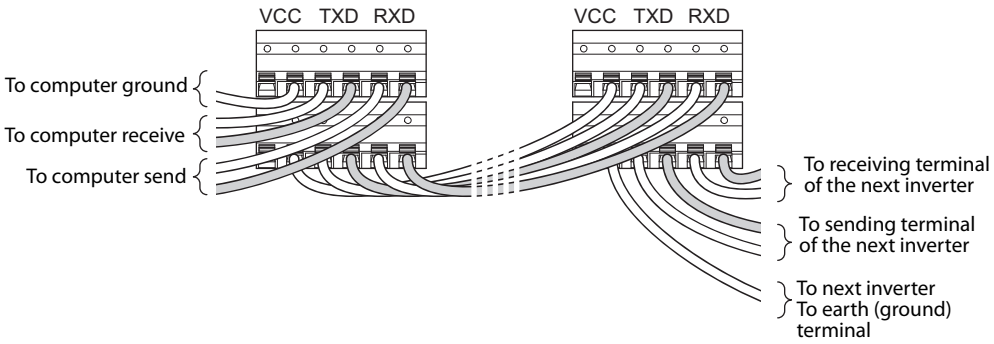


**Two-wire type connection**

If the computer is 2-wire type, a connection from the inverter can be changed to 2-wire type by passing wires across reception terminals and transmission terminals of the RS-485 terminals.

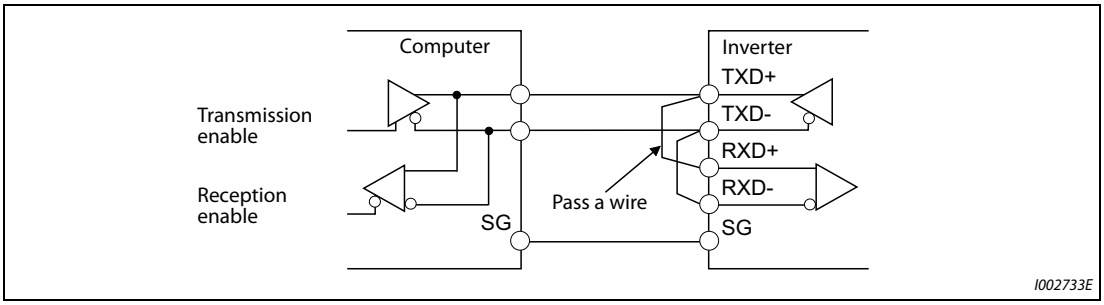


***Fig. 5-295:*** *2-wire type connection*

**NOTE**

A program should be created so that transmission is disabled (receiving state) when the computer is not sending and reception is disabled (sending state) during sending to prevent the computer from receiving its own data.

## 5.15.3 Initial setting of operation via communication

Set the action when the inverter is performing operation via communication.

- Set the communication protocol. (Mitsubishi inverter protocol/Modbus-RTU protocol)
- Set the action at fault occurrence or at writing of parameters

| Pr. | Name | Initial value | Setting range | Description | |
|---|---|---|---|---|---|
| 549<br>N000 | Protocol selection | 0 | 0 | Mitsubishi inverter protocol (computer link) | |
| | | | 1 | Modbus-RTU protocol | |
| 342<br>N001 | Communication EEPROM write selection | 0 | 0 | Parameter values written by communication are written to the EEPROM and RAM. | |
| | | | 1 | Parameter values written by communication are written to the RAM. | |
| 502<br>N013 | Stop mode selection at communication error | 0 | | **At fault occurrence** | **At fault removal** |
| | | | 0 | Coasts to stop<br>E.SER display ①<br>ALM signal output | Stays stopped<br>(E.SER display ①) |
| | | | 1 | Deceleration stop<br>E.SER display after stop ①<br>ALM signal output after stop | Stays stopped<br>(E.SER display ①) |
| | | | 2 | Deceleration stop<br>E.SER display after stop ① | Automatic restart function |
| | | | 3 | Operation continued at the set frequency of Pr. 779 | Normal operation |
| 779<br>N014 | Operation frequency during communication error | 9999 | 0 to 590 Hz | Set the frequency to be run at a communication error occurrence. | |
| | | | 9999 | The motor runs at the frequency used before the communication error. | |

① In communication by the communication option, E.OP1 is displayed.

### Setting the communication protocol (Pr. 549)

- Select the communication protocol.
- The Modbus-RTU protocol can be used by communication from the RS-485 terminals.

| Pr. 549 setting | Communication protocol |
|---|---|
| 0(initial value) | Mitsubishi inverter protocol (computer link) |
| 1 | Modbus-RTU protocol |

***Tab. 5-258:*** *Protocol selection*

### Communication EEPROM write selection (Pr. 342)

- When parameter write is performed via the inverter PU connector, RS-485 terminal, USB communication, or a communication option, the parameters storage device can be changed from EEPROM + RAM to RAM only. Use this function if parameter settings are changed frequently.
- When changing the parameter values frequently, set "1" in Pr. 342 "Communication EEPROM write selection" to write them to the RAM only. The life of the EEPROM will be shorter if parameter write is performed frequently with the setting unchanged from "0 (initial value)" (EEPROM write).

**NOTES**

Turning OFF the inverter's power supply clears the modified parameter settings when Pr. 342 = "1 (write only to RAM)". Therefore, the parameter values at next power-ON are the values last stored in EEPROM.

The parameter setting written in RAM cannot be checked on the operation panel. (The values displayed on the operation panel are the ones stored in EEPROM.)

**Operation selection at a communication error (Pr. 502, Pr. 779)**

- For communication using RS-485 terminals or a communication option, operation at a communication error can be selected. The operation is active under the Network operation mode.
- Select the stop operation at the retry count excess (Pr. 335, only with Mitsubishi inverter protocol) or at a signal loss detection (Pr. 336, Pr. 539).
- When a communication error is detected while Pr. 502 = "3", the alarm (LF) signal is output to an output terminal of the inverter.To use the LF signal, set "98 (positive logic) or 198 (negative logic)" in any of Pr. 190 to Pr. 196 (output terminal function selection) to assign the function to the output terminal.

| Pr. 502 setting | At fault occurrence | | | | At fault removal | | | |
|---|---|---|---|---|---|---|---|---|
| | Operating status | Indication | Fault (ALM) signal | Alarm (LF) signal | Operating status | Indication | Fault (ALM) signal | Alarm (LF) signal |
| 0 (initial value) | Coasts to stop | E.SER ① | ON | OFF | Stop status continues | E.SER ① | ON | OFF |
| 1 | Deceleration stop | E.SER after stop ① | ON after stop | OFF | | | | OFF |
| 2 | | | OFF | OFF | Automatic restart function ③ | Normal display | OFF | OFF |
| 3 | Operation continued at the set frequency of Pr. 779 ② | Normal display | OFF | ON | Normal operation | Normal display | OFF | OFF |

***Tab. 5-259:*** *Stop mode selection*

① In communication by the communication option, E.OP1 is displayed.

② Under position control, the operation is continued to the target position.

③ When the communication error is removed during deceleration, the motor re-accelerates. Under position control, the motor does not re-accelerates even when the communication error is removed during deceleration.

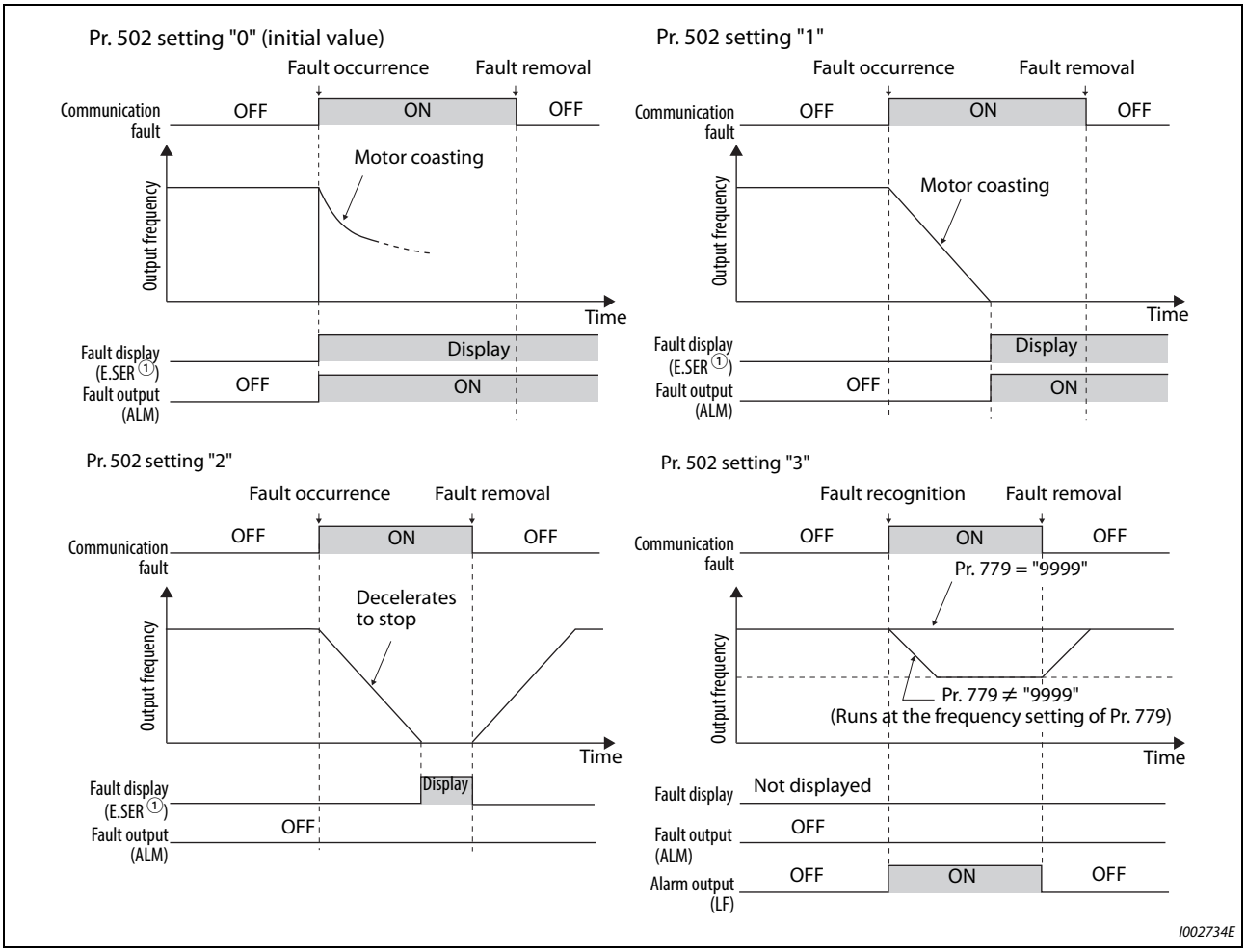


***Fig. 5-296:*** *Operation selection at a communication error*

① In communication by the communication option, E.OP1 is displayed.

**NOTES**

Fault output indicates the Fault signal (ALM) and an alarm bit output.

When the fault output is set enabled, fault records are stored in the faults history. (A fault record is written to the faults history at a fault output.)

When the fault output is not set enabled, fault record is overwritten to the faults history of the faults history temporarily but not stored.

After the fault is removed, the fault indication goes back to normal indication on the monitor, and the faults history goes back to the previous status.

If Pr. 502 is set to "1, 2, or 3", the normal deceleration time setting (settings like Pr. 8, Pr. 44, and Pr. 45) is applied as the deceleration time. Normal acceleration time setting (settings like Pr. 7 and Pr. 44) is applied as the acceleration time for restart.

When Pr. 502 = "2 or 3", the inverter operates with the start command and the speed command, which were used before the fault.

If a communication line error occurs, then the error is removed during deceleration while Pr. 502 = "2", the motor re-accelerates from that point.

The Pr. 502 and Pr. 779 settings are valid when communication is performed via the RS-485 terminals or a communication option.

These parameters are valid under the Network operation mode. When performing communication with RS-485 terminals, set Pr. 551 "PU mode operation command source selection" to "2 (initial value)".

Pr. 502 is valid for the device that has the command source under the Network operation mode. If a communication option is installed while Pr. 550 = "9999 (initial value)", a communication error in RS-485 terminals occurs and Pr. 502 becomes invalid.

If the communication error setting is disabled with Pr. 502 = "3", Pr. 335 = "9999", and Pr. 539 = "9999", the inverter does not continue its operation with the frequency set by Pr. 779 at a communication error.

If a communication error occurs while continuous operation at Pr. 779 is selected with Pr. 502 = "3", the inverter operates at the frequency set in Pr. 779 even though the speed command source is at the external terminals.
Example) If a communication error occurs while Pr. 339 = "2" and the external terminal RL is ON, the operation is continued at the frequency set in Pr. 779.

During position control, a fault is output without deceleration even if Pr. 502 = "2".

| Parameters referred to | | | |
|---|---|---|---|
| Pr. 7 | Acceleration time | => | page 5-225 |
| Pr. 8 | Deceleration time | => | page 5-225 |
| Pr. 335 | RS-485 communication retry count | => | page 5-587 |
| Pr. 336 | RS-485 communication check time interval | => | page 5-587 |
| Pr. 539 | Modbus-RTU communication check time interval | => | page 5-607 |
| Pr. 550 | NET mode operation command source selection | => | page 5-266 |
| Pr. 551 | PU mode operation command source selection | => | page 5-266 |

## 5.15.4 Initial settings and specifications of RS-485 communication

Use the following parameters to perform required settings for the RS-485 communication between the inverter and a personal computer.

- There are two types of communication, communication using the inverter's PU connector and communication using the RS-485 terminals.
- Parameter setting, monitoring, etc. can be performed using Mitsubishi inverter protocol and Modbus-RTU communication protocol.
- To make communication between the personal computer and inverter, setting of the communication specifications must be made to the inverter in advance.
  Data communication cannot be made if the initial settings are not made or if there is any setting error.

**[Parameters related to PU connector communication]**

| Pr. | Name | Initial value | Setting range | Description | |
|---|---|---|---|---|---|
| 117<br>N020 | PU communication station number | 0 | 0 to 31 | Specify the inverter station number.<br>Set the inverter station numbers when two or more inverters are connected to one personal computer. | |
| 118<br>N021 | PU communication speed | 192 | 48, 96, 192, 384, 576, 768, 1152 | Set the communication speed.<br>The setting value × 100 equals the communication speed.<br>For example, if 192 is set, the communication speed is 19200 bps. | |
| N022 | PU communication data length | 0 | 0 | Data length 8 bits | |
| | | | 1 | Data length 7 bits | |
| N023 | PU communication stop bit length | 1 | 0 | Stop bit length 1 bit | |
| | | | 1 | Stop bit length 2 bits | |
| 119 | PU communication stop bit length / data length | 1 | 0 | Stop bit length 1 bit | Data length 8 bits |
| | | | 1 | Stop bit length 2 bits | |
| | | | 10 | Stop bit length 1 bit | Data length 7 bits |
| | | | 11 | Stop bit length 2 bits | |
| 120<br>N024 | PU communication parity check | 2 | 0 | Without parity check | |
| | | | 1 | With parity check at odd numbers | |
| | | | 2 | With parity check at even numbers | |
| 121<br>N025 | Number of PU communication retries | 1 | 0 to 10 | Set the permissible number of retries for unsuccessful data reception. If the number of consecutive errors exceeds the permissible value, the inverter will trip. | |
| | | | 9999 | If a communication error occurs, the inverter will not trip. | |
| 122<br>N026 | PU communication check time interval | 9999 | 0 | No PU connector communication | |
| | | | 0.1 to 999.8 s | Set the interval of the communication check (signal loss detection) time.<br>If a no-communication state persists for longer than the permissible time, the inverter will trip. | |
| | | | 9999 | No communication check (signal loss detection) | |
| 123<br>N027 | PU communication waiting time setting | 9999 | 0 to 150 ms | Set the waiting time between data transmission to the inverter and the response. | |
| | | | 9999 | Set with communication data. | |
| 124<br>N028 | PU communication CR/LF selection | 1 | 0 | Without CR/LF | |
| | | | 1 | With CR | |
| | | | 2 | With CR/LF | |

**[Parameters related to communication with the RS-485 terminals]**

| Pr. | Name | Initial value | Setting range | Description |
|---|---|---|---|---|
| 331<br>N030 | RS-485 communication station number | 0 | 0 to 31<br>(0 to 247)<br>① ② | Set the inverter station number.<br>(Same specifications as Pr. 117) |
| 332<br>N031 | RS-485 communication speed | 96 | 3, 6, 12, 24, 48, 96, 192, 384, 576, 768, 1152 | Select the communication speed.<br>(Same specifications as Pr. 118) |
| N032 | RS-485 communication data length | 0 | 0, 1 | Select the data length.<br>(Same specifications as P.E022) ③ |
| N033 | RS-485 communication stop bit length | 1 | 0, 1 | Select the stop bit length.<br>(Same specifications as P.E023) ④ |
| 333 | RS-485 communication stop bit length / data length | 1 | 0, 1, 10, 11 | Select the stop bit length and data bit length.<br>(Same specifications as Pr. 119) ③ ④ |
| 334<br>N034 | RS-485 communication parity check selection | 2 | 0, 1, 2 | Select the parity check specifications.<br>(Same specifications as Pr. 120) |
| 335<br>N035 ⑤ | RS-485 communication retry count | 1 | 0 to 10, 9999 | Set the permissible number of retries for unsuccessful data reception. (Same specifications as Pr. 121) |
| 336<br>N036 ⑤ | RS-485 communication check time interval | 0 s | 0 | RS-485 communication is available, but the inverter trips in the NET operation mode. |
| | | | 0.1 to 999.8 s | Set the interval of the communication check (signal loss detection) time. (Same specifications as Pr. 122) |
| | | | 9999 | No communication check (signal loss detection) |
| 337<br>N037 ⑤ | RS-485 communication waiting time setting | 9999 | 0 to 150 ms, 9999 | Set the waiting time between data transmission to the inverter and the response. (Same specifications as Pr. 123) |
| 341<br>N038 ⑤ | RS-485 communication CR/LF selection | 1 | 0, 1, 2 | Select the presence/absence of CR/LF.<br>(Same specifications as Pr. 124) |

① When "1" (Modbus-RTU protocol) is set in Pr. 549, the setting range within parentheses is applied.
② When a value outside the setting range is set, the inverter operates at the initial value.
③ In the Modbus-RTU protocol, the data length is fixed at 8 bits.
④ In the Modbus-RTU protocol, Pr. 334 setting is applied as the stop bit length. (Refer to page 5-607.)
⑤ In the Modbus-RTU protocol, this is invalid.

**NOTES**

The monitored items and parameter settings can be read during communication with the Pr. 336 "RS-485 communication check time interval"= "0 (initial value)" setting, but such operation will become faulty once the operation mode is changed to the NET operation mode. When the NET operation mode is selected as the start-up operation mode, communication is performed once, then a Communication fault (inverter) (E.SER) occurs. To perform operation or parameter writing via communication, set "9999" or a large setting value in Pr. 336. (The setting value is determined by the computer program.) (Refer to page 5-597.)

Always reset the inverter after making the initial settings of the parameters. After changing the communication-related parameters, communication cannot be made until the inverter is reset.

## 5.15.5 Mitsubishi inverter protocol (computer link communication)

Parameter settings and monitoring are possible by using the Mitsubishi inverter protocol (computer link communication) via inverter PU connector and the RS-485 terminals.

### Communication specifications

The communication specifications are given below.

| Item | | Description | Related Parameter |
|---|---|---|---|
| Communication protocol | | Mitsubishi protocol (computer link) | Pr. 551 |
| Conforming standard | | EIA-485 (RS-485) | — |
| Connectable units | | 1:N (maximum 32 units), setting is 0 to 31 stations | Pr. 117<br>Pr. 331 |
| Communication Speed | PU connector | Selected among 4800/9600/19200/38400 bps | Pr. 118 |
| | RS-485 terminals | Selected among 300/600/1200/2400/4800/9600/19200/38400/38400/57600/76800/115200 bps | Pr. 332 |
| Control procedure | | Asynchronous system | — |
| Communication method | | Half-duplex system | — |
| Communication specifications | Character system | ASCII (7 bits or 8 bits can be selected.) | Pr. 119<br>Pr. 333 |
| | Start bit | 1 bit | — |
| | Stop bit length | 1 bit or 2 bits can be selected. | Pr. 119<br>Pr. 333 |
| | Parity check | Check (at even or odd numbers) or no check can be selected. | Pr. 120<br>Pr. 334 |
| | Error check | Sum code check | — |
| | Terminator | CR/LF (presence/absence selectable) | Pr. 124<br>Pr. 341 |
| Waiting time setting | | Selectable between presence and absence | Pr. 123<br>Pr. 337 |

***Tab. 5-260:*** *Communication specifications*

### Communication procedure

Data communication between the computer and inverter is made in the following procedure.

❶ Request data is sent from the computer to the inverter. (The inverter will not send data unless requested.)

❷ After waiting for the waiting time,

❸ The inverter sends reply data to the computer in response to the computer request.

❹ After waiting for the inverter data processing time,

❺ An answer from the computer in response to reply data (❸) of the inverter is transmitted. (Even if (❺) is not sent, subsequent communication is made properly.)

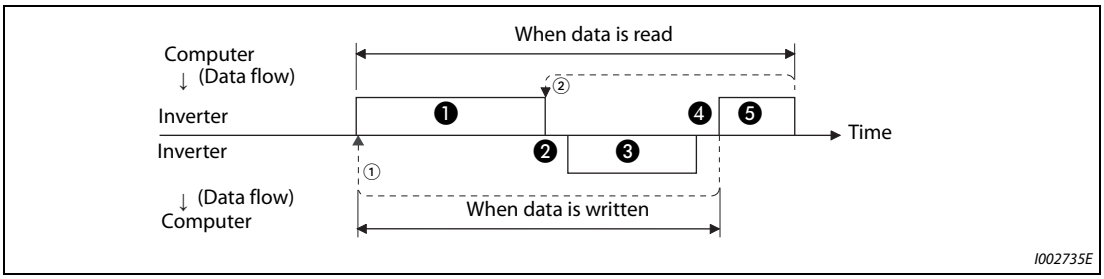


***Fig. 5-297:*** *Schematic diagram of data exchange*

① If a data error is detected and a retry must be made, perform retry operation with the user program. The inverter trips if the number of consecutive retries exceeds the parameter setting.

② On receipt of a data error occurrence, the inverter returns reply data (❸) to the computer again. The inverter trips if the number of consecutive data errors reaches or exceeds the parameter setting.

**Communication operation presence/absence and data format types**

- Data communication between the computer and inverter is made in ASCII code (hexadecimal code).
- Communication operation presence/absence and data format types are as follows.

| Symbol | Operation | | Operation command | Operation frequency | Multi command | Parameter write | Inverter reset | Monitor | Parameter read |
|---|---|---|---|---|---|---|---|---|---|
| ❶ | Communication request is sent to the inverter in accordance with the user program in the computer. | | A, A1 | A | A2 | A | A | B | B |
| ❷ | Inverter data processing time | | With | With | With | With | Without | With | With |
| ❸ | Reply data from the inverter (Data (❶) is checked for an error) | No error ① (Request accepted) | C | C | C1 ③ | C | C ② | E, E1, E2, E3 | E |
| | | With error (Request rejected) | D | D | D | D | D ② | D | D |
| ❹ | Computer processing delay time | | 10 ms or more | | | | | | |
| ❺ | Answer from computer in response to reply data ❸ (Data ❸ is checked for error) | No error ① (No inverter processing) | Without | Without | Without (C) | Without | Without | Without (C) | Without (C) |
| | | With error (Inverter outputs ❸ again.) | Without | Without | F | Without | Without | F | F |

***Tab. 5-261:*** *Communication and data format*

① In the communication request data from the computer to the inverter, 10 ms or more is also required after "no data error (ACK)". (Refer to page 5-595.)

② Reply from the inverter to the inverter reset request can be selected. (Refer to page 5-600.)

③ At mode error, and data range error, C1 data contains an error code. (Refer to page 5-606.) Except for those errors, the error is returned with data format D.

● Data writing format

– ❶ Communication request data from the computer to the inverter

| Format | Number of characters | | | | | | | | | | | | | | | | | | |
|---|---|---|---|---|---|---|---|---|---|---|---|---|---|---|---|---|---|---|---|
| | 1 | 2 | 3 | 4 | 5 | 6 | 7 | 8 | 9 | 10 | 11 | 12 | 13 | 14 | 15 | 16 | 17 | 18 | 19 |
| A | ENQ ① | Inverter station No. ② | | Instruction code | | ③ | Data | | | | Sum check | | ④ | | | | | | |
| A1 | ENQ ① | Inverter station No. ② | | Instruction code | | ③ | Data | | Sum check | | ④ | | | | | | | | |
| A2 | ENQ ① | Inverter station No. ② | | Instruction code | | ③ | Send data type | Receive data type | Data1 | | | | Data2 | | | | Sum check | | ④ |

– ❸ Reply data from the inverter to the computer (No data error detected)

| Format | Number of characters | | | | | | | | | | | | | | | | | | |
|---|---|---|---|---|---|---|---|---|---|---|---|---|---|---|---|---|---|---|---|
| | 1 | 2 | 3 | 4 | 5 | 6 | 7 | 8 | 9 | 10 | 11 | 12 | 13 | 14 | 15 | 16 | 17 | 18 | 19 |
| C | ACK ① | Inverter station No. ② | | ④ | | | | | | | | | | | | | | | |
| C1 | STX ① | Inverter station No. ② | | Send data type | Receive data type | Error code 1 | Error code 2 | Data1 | | | | Data2 | | | | ETX ① | Sum check | | ④ |

– ❸ Reply data from the inverter to the computer (Data error detected)

| Format | Number of characters | | | | |
|---|---|---|---|---|---|
| | 1 | 2 | 3 | 4 | 5 |
| D | NAK ① | Inverter station No. ② | | Error code | ④ |

① Indicates a control code.

② Specifies the inverter station numbers in the range of H00 to H1F (stations 0 to 31) in hexadecimal.

③ When Pr. 123 and Pr. 337 (Waiting time setting) ≠ 9999, create a communication request data without "waiting time" in the data format. (The number of characters decreases by 1.)

④ CR, LF code: When data is transmitted from the computer to the inverter, codes CR (carriage return) and LF (line feed) are automatically set at the end of a data group on some computers. In this case, setting must be also made on the inverter according to the computer. Whether the CR and LF codes will be present or absent can be selected using Pr. 124 and Pr. 341 (CR/LF selection).

● Data reading format

– ❶ Communication request data from the computer to the inverter

| Format | Number of characters | | | | | | | | |
|---|---|---|---|---|---|---|---|---|---|
| | 1 | 2 | 3 | 4 | 5 | 6 | 7 | 8 | 9 |
| B | ENQ ① | Inverter station No. ② | | Instruction code | | ③ | Sum check | | ④ |

– ❸ Reply data from the inverter to the computer (No data error detected)

| Format | Number of characters | | | | | | | | | | | | |
|---|---|---|---|---|---|---|---|---|---|---|---|---|---|
| | 1 | 2 | 3 | 4 | 5 | 6 | 7 | 8 | 9 | 10 | 11 | 12 | 13 |
| E | STX ① | Inverter station No. ② | | Read data | | | | ETX ① | Sum check | | ④ | | |
| E1 | STX ① | Inverter station No. ② | | Read data | | ETX ① | Sum check | | ④ | | | | |
| E2 | STX ① | Inverter station No. ② | | Read data | | | | | | ETX ① | Sum check | | ④ |

| Format | Number of characters | | | | | | | |
|---|---|---|---|---|---|---|---|---|
| | 1 | 2 | 3 | 4 to 23 | 24 | 25 | 26 | 27 |
| E3 | STX ① | Inverter station No. ② | | Read data (Inverter model information) | ETX ① | Sum check | | ④ |

– ❸ Reply data from the inverter to the computer (Data error detected)

| Format | Number of characters | | | | |
|---|---|---|---|---|---|
| | 1 | 2 | 3 | 4 | 5 |
| D | NAK ① | Inverter station No. ② | | Error code | ④ |

– ❺ Transmission data from the computer to the inverter when reading data

| Format | Number of characters | | | |
|---|---|---|---|---|
| | 1 | 2 | 3 | 4 |
| C (No data error detected) | ACK ① | Inverter station No. ② | | ④ |
| F (Data error detected) | NAK ① | Inverter station No. ② | | ④ |

① Indicates a control code.

② Specifies the inverter station numbers in the range of H00 to H1F (stations 0 to 31) in hexadecimal.

③ When Pr. 123 and Pr. 337 (Waiting time setting) ≠ 9999, create a communication request data without "waiting time" in the data format. (The number of characters decreases by 1.)

④ CR, LF code: When data is transmitted from the computer to the inverter, codes CR (carriage return) and LF (line feed) are automatically set at the end of a data group on some computers. In this case, setting must be also made on the inverter according to the computer. Whether the CR and LF codes will be present or absent can be selected using Pr. 124 or Pr. 341 (CR/LF selection).

**Data definitions**

- Control code

| Signal name | ASCII Code | Description |
|---|---|---|
| STX | H02 | Start Of Text (Start of data) |
| ETX | H03 | End Of Text (End of data) |
| ENQ | H05 | Inquiry (Communication request) |
| ACK | H06 | Acknowledge (No data error detected) |
| LF | H0A | Line Feed |
| CR | H0D | Carriage Return |
| NAK | H15 | Negative Acknowledge (Data error detected) |

***Tab. 5-262:*** *Control codes*

- Inverter station number
- Specify the station number of the inverter which communicates with the computer.
- Instruction code
- Specify the processing request, for example, operation or monitoring, given by the computer to the inverter. Hence, the inverter can be run and monitored in various ways by specifying the instruction code appropriately. (Refer to page 5-600.)
- Data
- Indicates the data such as frequency and parameters transferred to and from the inverter. The definitions and ranges of set data are determined in accordance with the instruction codes. (Refer to page 5-600.)
- Waiting time
- Specify the waiting time between the receipt of data at the inverter from the computer and the transmission of reply data. Set the waiting time in accordance with the response time of the computer in the range of 0 to 150 ms in 10 ms increments. (For example; 1=10 ms, 2= 20 ms)

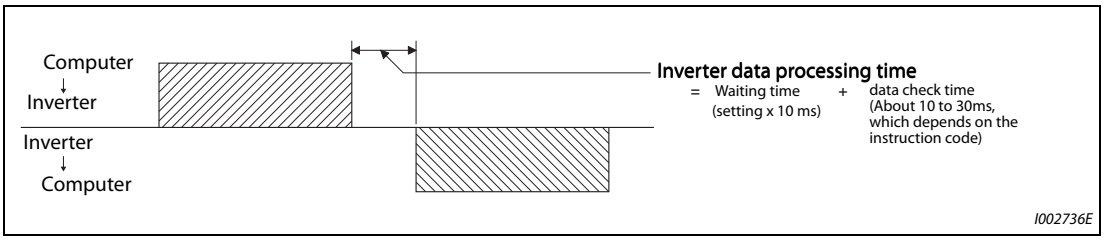


***Fig. 5-298:*** *Specifying the waiting time*

**NOTES**

When Pr. 123 or Pr. 337 (Waiting time setting) ≠ "9999", create a communication request data without "waiting time" in the data format. (The number of characters decreases by 1.)

The data check time varies depending on the instruction code. (Refer to page 5-595.)

● Sum check code

The sum check code is a 2-digit ASCII (hexadecimal) representing the lower 1 byte (8 bits) of the sum (binary) derived from the checked ASCII data.

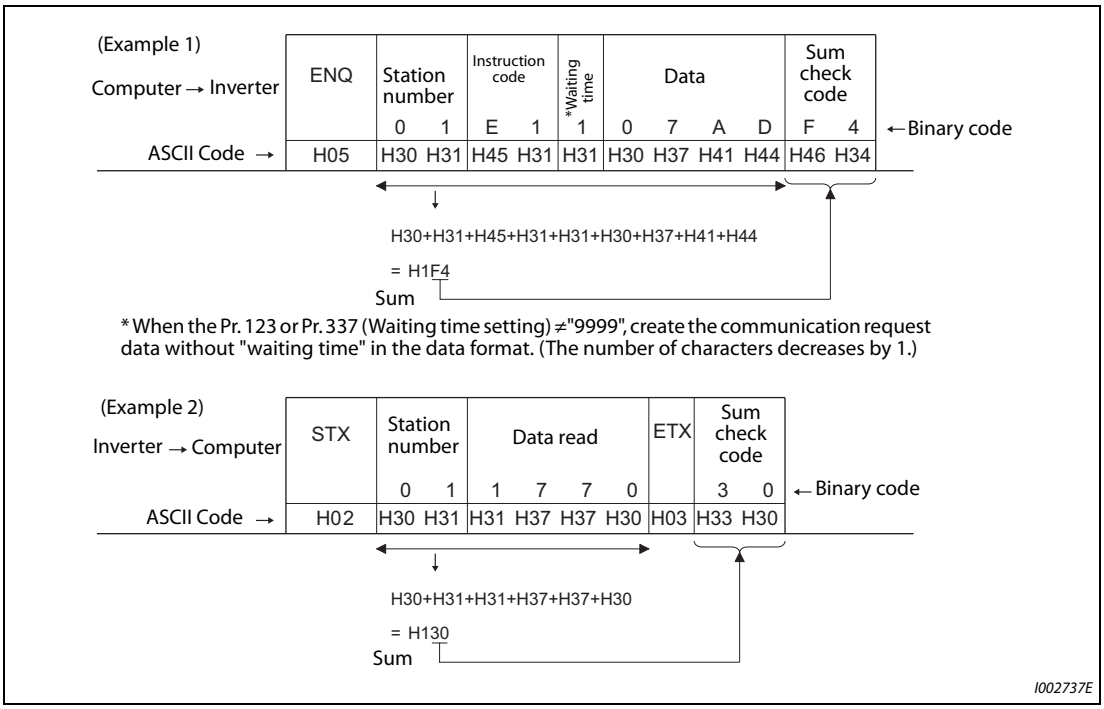


***Fig. 5-299:*** *Sum check code (examples)*

● Error code

If any error is found in the data received by the inverter, its error definition is sent back to the computer together with the NAK code.

| Error Code | Error Item | Error Description | Inverter Operation |
|---|---|---|---|
| H0 | Computer NAK error | The number of errors consecutively detected in communication request data from the computer is greater than the permissible number of retries. | Trips (E.PUE/E.SER) if error occurs continuously more than the permissible number of retries. |
| H1 | Parity error | The parity check result does not match the specified parity. | |
| H2 | Sum check error | The sum check code in the computer does not match that of the data received by the inverter. | |
| H3 | Protocol error | The data received by the inverter has a grammatical mistake. Or, data receive is not completed within the predetermined time. CR or LF is not as set in the parameter. | |
| H4 | Framing error | The stop bit length differs from the initial setting. | |
| H5 | Overrun error | New data has been sent by the computer before the inverter completes receiving the preceding data. | |
| H6 | — | — | — |
| H7 | Character error | The character received is invalid (other than 0 to 9, A to F, control code). | Does not accept the received data, but the inverter does not trip. |
| H8 | — | — | — |
| H9 | — | — | — |
| HA | Mode error | Parameter write was attempted in other than the computer link operation mode, when operation command source is not selected or during inverter operation. | Does not accept the received data, but the inverter does not trip. |
| HB | Instruction code error | The specified instruction code does not exist. | |
| HC | Data range error | Invalid data has been specified for parameter writing, running frequency setting, etc. | |

***Tab. 5-263:*** *Error codes (1)*

| Error Code | Error Item | Error Description | Inverter Operation |
|---|---|---|---|
| HD | — | — | — |
| HE | — | — | — |
| HF | Normal (no error) | — | — |

***Tab. 5-263:*** *Error codes (2)*

### Response time

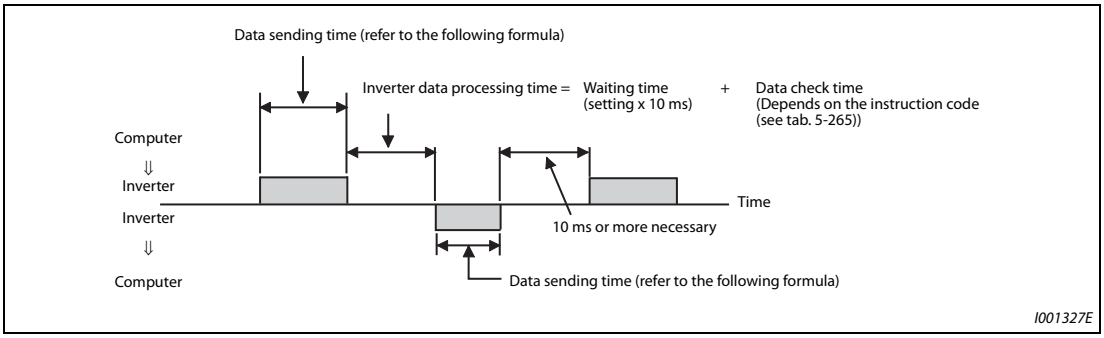


***Fig. 5-300:*** *Response time*

Formula for data transmission time

$$\frac{1}{\text{Communication speed (bps)}} \times \text{Number of data characters (Refer to page 5-590)} \times \text{Communication specifications (Total number of bits)} = \text{data transmission time (s) (Refer to the following.)}$$

● Communication specifications

| Name | | Number of bits |
|---|---|---|
| Stop bit length | | 1 bit |
| | | 2 bits |
| Data Length | | 7 bits |
| | | 8 bits |
| Parity check | With | 1 bit |
| | Without | 0 bits |

***Tab. 5-264:*** *Communication specifications*

**NOTES**

In addition to the above, 1 start bit is necessary.

Minimum number of total bits: 9 bits, maximum number of total bits: 12 bits.

● Data check time

| Item | Check time |
|---|---|
| Various monitors, operation command, Frequency setting (RAM) | < 12 ms |
| Parameter read/write, Frequency setting (EEPROM) | < 30 ms |
| Parameter clear / all clear | < 5 s |
| Reset command | No answer |

***Tab. 5-265:*** *Data check time*

**Retry count setting (Pr. 121, Pr. 335)**

- Set the permissible number of retries at data receive error occurrence. (Refer to page 5-594 for data receive error for retry.)
- When the data receive errors occur consecutively and the number of retries exceeds the permissible number setting, a communication fault (PU connector communication: E.PUE, RS-485 terminal communication: E.SER) occurs and the inverter trips.
- When a data transmission error occurs while "9999" is set, the inverter does not trip but outputs the alarm (LF) signal.
  To use the LF signal, set "98 (positive logic) or 198 (negative logic)" in any of Pr. 190 to Pr. 196 (output terminal function selection) to assign the function to an output terminal.

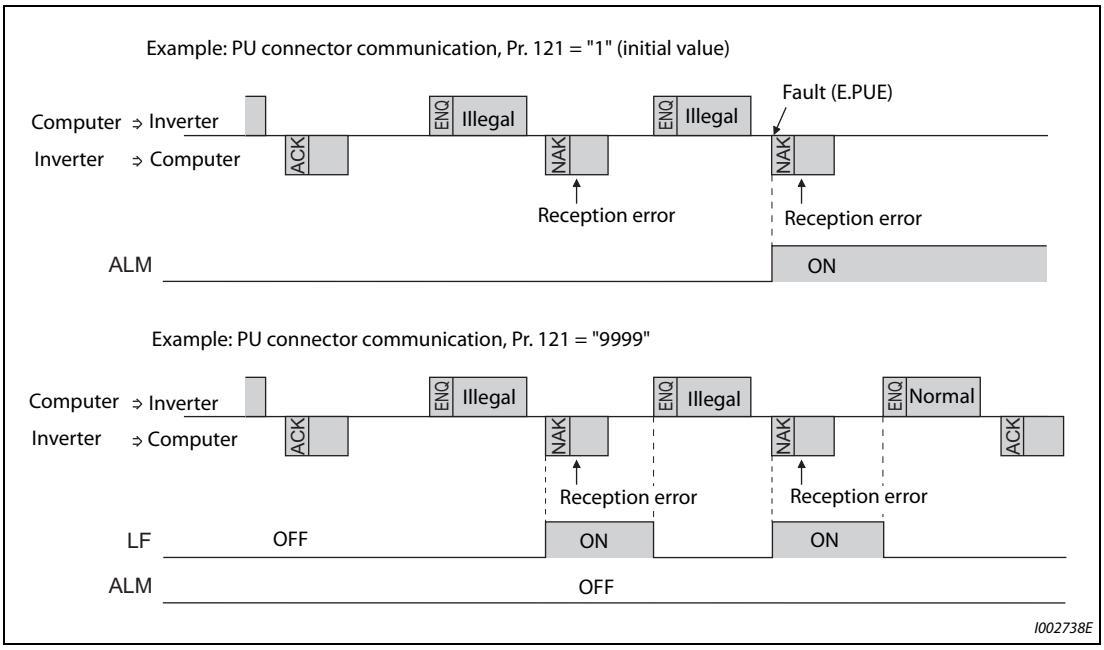


***Fig. 5-301:*** *Data transmission error*

**NOTE**

For the RS-485 terminal communication, the operation at a communication error occurrence depends on the Pr. 502 "Stop mode selection at communication error" setting. (Refer to page 5-583.)

**Signal loss detection (Pr. 122, Pr. 336 "RS-485 communication check time interval")**

- If a signal loss (communication stop) is detected between the inverter and computer as a result of a signal loss detection, a communication fault (PU connector communication: E.PUE, RS-485 terminal communication: E.SER) occurs and the inverter trips.
- When the setting is "9999", communication check (signal loss detection) is not made.
- When the setting is "0", communication from the PU connector is not possible. In the case of communication by RS-485 terminals, reading, etc. of monitors and parameters is possible, though a communication error (E.SER) occurs instantly when the Network operation mode is switched to.
- A signal loss detection is made when the setting is any of "0.1 s to 999.8 s". To make a signal loss detection, it is necessary to send data (for details on control codes, refer to page 5-593) from the computer within the communication check time interval. (The inverter makes a communication check (clearing of communication check counter) regardless of the station number setting of the data sent from the master).
- Communication check is started at the first communication in the operation mode having the operation source (PU operation mode for PU connector communication in the initial setting or Network operation mode for RS-485 terminal communication).

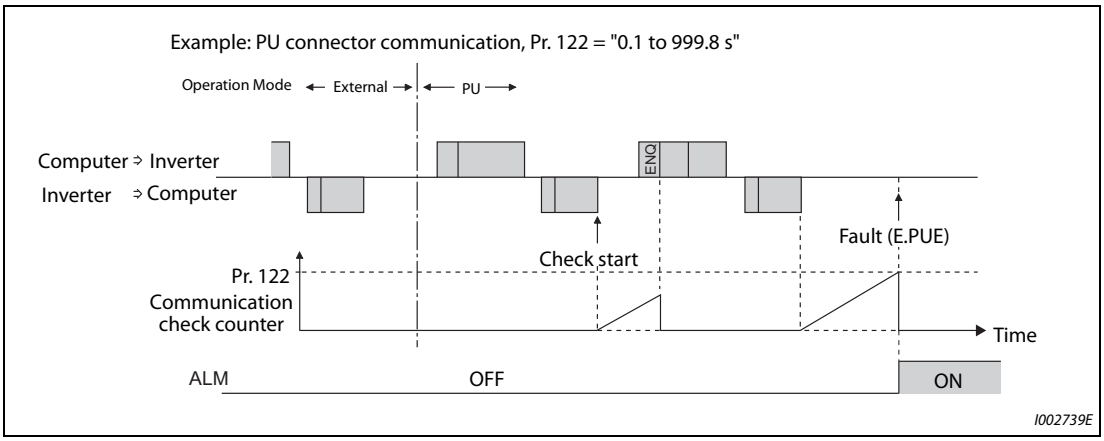


***Fig. 5-302:*** *Open cable detection*

**Instructions for the program**

- When data from the computer has any error, the inverter does not accept that data. Hence, in the user program, always insert a retry program for data error.
- All data communication, for example, run command or monitoring, are started when the computer gives a communication request. The inverter does not return any data without the computer's request. Hence, design the program so that the computer gives a data read request for monitoring, etc. as required.

● Program example: To switch to the Network operation mode

**Microsoft® Visual C++® (Ver.6.0) programming example**

```
#include <stdio.h>
#include <windows.h>

void main(void){
	HANDLE		hCom;		// Communication handle
	DCB		hDcb;		// Structure for setting communication settings
	COMMTIMEOUTS		hTim;	// Structure for setting timeouts

	char		szTx[0x10];		// Send buffer
	char		szRx[0x10];		// Receive buffer
	char		szCommand[0x10];// Command
	int		nTx,nRx;		// For storing buffer size
	int		nSum;		// For calculating sum code
	BOOL		bRet;
	int		nRet;
	int		i;

	//**** Open COM1 port ****
	hCom = CreateFile("COM1", (GENERIC_READ | GENERIC_WRITE), 0, NULL, OPEN_EXISTING, FILE_ATTRIBUTE_NORMAL, NULL);
	if(hCom != NULL) {
		//****Set COM1 port communication ****
		GetCommState(hCom,&hDcb);		// Get current communication information
		hDcb.DCBlength = sizeof(DCB);		// Structure size setting
		hDcb.BaudRate = 19200;		// Communication speed = 19200 bps
		hDcb.ByteSize = 8;		// Data length = 8 bits
		hDcb.Parity = 2;		// Parity check at even numbers
		hDcb.StopBits = 2;		// Stop bit = 2 bits
		bRet = SetCommState(hCom,&hDcb);		// Setting of changed communication information
		if(bRet == TRUE) {
			//**** Set COM1 port timeout ****
			GetCommTimeouts(hCom,&hTim);		// Get current timeout values
			hTim.WriteTotalTimeoutConstant = 1000;		// Write timeout 1 second
			hTim.ReadTotalTimeoutConstant = 1000;		// Read timeout 1 second
			hTim.ReadTotalTimeoutConstantSetCommTimeouts(hCom,&hTim);	// Setting of changed timeout values
			//**** Setting of command for switching the station number 1 inverter to the Network operation mode ****
			sprintf(szCommand,"01FB10000");		// Send data (NET operation write)
			nTx = strlen(szCommand);		// Send data size
			//**** Generate sum code ****
			nSum = 0;		// Initialize sum data
			for(i = 0;i < nTx;i++) {
				nSum += szCommand[i];		// Calculate sum code
				nSum &= (0xff);		// Mask data
			}

			//**** Generate send data ****
			memset(szTx,0,sizeof(szTx));		// Initialize send buffer
			memset(szRx,0,sizeof(szRx));		// Initialize receive buffer
			sprintf(szTx,"\5%s%02X",szCommand,nSum);// ENQ code + send data + sum code
			nTx = 1 + nTx + 2;		// ENQ code + number of send data + number of sum codes

			nRet = WriteFile(hCom,szTx,nTx,&nTx,NULL);
			//**** Send ****
			if(nRet != 0) {
				nRet = ReadFile(hCom,szRx,sizeof(szRx),&nRx,NULL);
			//**** Receive ****
				if(nRet != 0) {
					//**** Display receive data ****
					for(i = 0;i < nRx;i++) {
						printf("%02X ",(BYTE)szRx[i]);  // Output received data to console
						// Display ASCII code in Hexadecimal' In case of 0', "30" is displayed.
					}
					printf("\n\r");
				}
			}
		}
		CloseHandle(hCom);		// Close communication port
	}
}
```

**General flowchart**

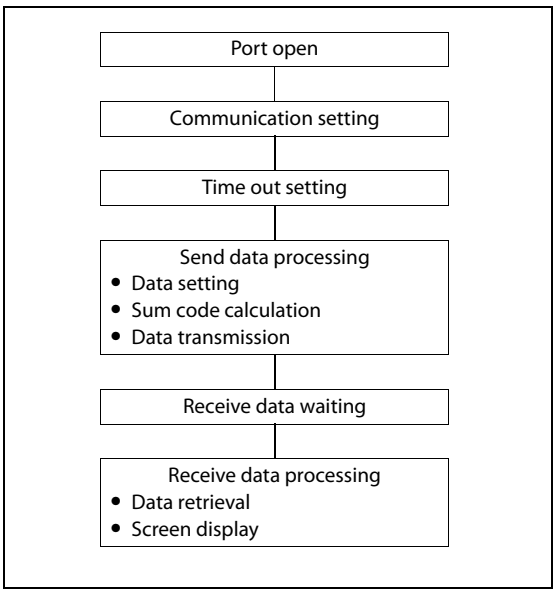


***Fig. 5-303:***
*General flow*

**CAUTION:**

- ***Always set the communication check time interval before starting operation to prevent hazardous conditions.***
- ***Data communication is not started automatically but is made only once when the computer provides a communication request. If communication is disabled during operation due to signal cable breakage etc., the inverter cannot be stopped. When the communication check time interval has elapsed, the inverter will trip (E.PUE, E.SER).***
  ***The inverter can be coasted to a stop by switching ON the RES signals or by switching the power OFF.***
- ***If communication is broken due to signal cable breakage, computer fault etc., the inverter does not detect such a fault. This should be fully noted.***

### Setting items and set data

After completion of parameter settings, set the instruction codes and data, then start communication from the computer to allow various types of operation control and monitoring.

Refer to page 5-505 for data formats (A, A1, A2, B, C, C1, D, E, E1, E2, E3, F).

| Item | | Read/ Write | Instruction code | Data description | Number of data digits (Format) ① |
|---|---|---|---|---|---|
| Operation mode | | Read | H7B | H0000: Network operation<br>H0001: External operation<br>H0002: PU operation, External/PU combined operation, PUJOG operation | 4 digits (B.E/D) |
| | | Write | HFB | H0000: Network operation<br>H0001: External operation<br>H0002: PU operation (RS-485 communication operation via PU connector) | 4 digits (A,C/D) |
| Monitor | Output frequency/ speed | Read | H6F | H0000 to HFFFF: Output frequency in 0.01Hz increments<br>(The display can be changed to the rotations per minute using Pr. 37, Pr. 144 and Pr. 811. (Refer to page 5-314)) | 4 digits (B.E/D) |
| | Output current | Read | H70 | H0000 to HFFFF: Output current (hexadecimal)<br>Increment 0.01 A (FR-A820-03160(55K) or lower, FR-A840-01800(55K) or lower)<br>Increment 0.1 A (FR-A820-03800(75K) or higher, FR-A840-02160(75K) or higher) | 4 digits (B.E/D) |
| | Output voltage | Read | H71 | H0000 to HFFFF: Output voltage (hexadecimal) in 0.1 V increments | 4 digits (B.E/D) |
| | Special monitor | Read | H72 | H0000 to HFFFF: Monitor data selected in the instruction code HF3 | 4 digits (B.E/D) |
| | Special monitor selection No. | Read | H73 | Monitor selection data<br>(Refer to page 5-317 for details on selection No.) | 2 digits (B.E1/D) |
| | | Write | HF3 | | 2 digits (A1,C/D) |
| | Fault record | Read | H74 to H77 | H0000 to HFFFF: Two latest fault records<br> 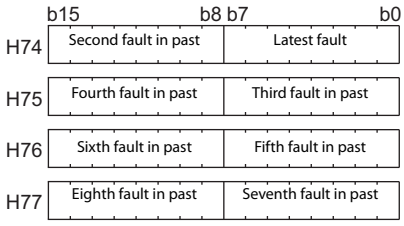 <br><br>Fault record display example (instruction code H74)<br>With the read data H30A0<br>(Last fault : THT)<br>(Present fault : OPT)<br> 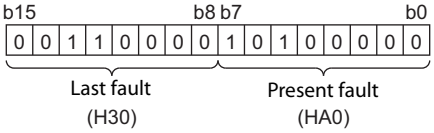 <br><br>(Refer to page 6-5 for details on fault record read data.) | 4 digits (B.E/D) |
| Operation command (extended) | | Write | HF9 | Control input commands such as forward rotation signal (STF) and reverse rotation signal (STR) can be set.<br>(For the details, refer to page 5-604.) | 4 digits (A, C/D) |
| Operation command | | Write | HFA | | 2 digits (A1, C/D) |

***Tab. 5-266:*** *Setting of the instruction codes and data (1)*

| Item | Read/ Write | Instruc-tion code | Data description | Number of data digits (Format) ① |
|---|---|---|---|---|
| Inverter status monitor (extended) | Read | H79 | The states of the output signals such as forward rotation, reverse rotation and inverter running (RUN) can be monitored. (For the details, refer to page 5-605.) | 4 digits (B.E/D) |
| Inverter status monitor | Read | H7A | | 2 digits (B.E1/D) |
| Set frequency (RAM) | Read | H6D | Read the set frequency/speed from the RAM or EEPROM.<br>H0000 to HFFFF: Set frequency in 0.01Hz increments<br>(The display can be changed to the rotations per minute using Pr. 37, Pr. 144 and Pr. 811. (Refer to page 5-314)) | 4 digits (B.E/D) |
| Set frequency (EEPROM) | | H6E | | |
| Set frequency (RAM) | Write | HED | Write the set frequency/speed into the RAM or EEPROM.<br>H0000 to HE678 (0 to 590.00Hz): frequency in 0.01Hz increments<br>(The display can be changed to the rotations per minute using Pr. 37, Pr. 144 and Pr. 811. (Refer to page 5-314))<br>To change the set frequency consecutively, write data to the inverter RAM. (Instruction code: HED) | 4 digits (A, C/D) |
| Set frequency (RAM, EEPROM) | | HEE | | |
| Inverter reset | Write | HFD | H9696: Inverter reset<br>As the inverter is reset at the start of communication by the computer, the inverter cannot send reply data back to the computer. | 4 digits (A, C/D) |
| | | | H9966: Inverter reset<br>When data is sent normally, ACK is returned to the computer, and then the inverter is reset. | 4 digits (A, D) |
| Faults history batch clear | Write | HF4 | H9696: Faults history batch clear | 4 digits (A, C/D) |
| Parameter clear All clear | Write | HFC | All parameters return to initial values.<br>Whether to clear communication parameters or not can be selected according to the data.<br>• Parameter clear<br>H9696: Communication parameters are cleared.<br>H5A5A: Communication parameters are not cleared.②<br>• All parameter clear<br>H9966: Communication parameters are cleared.<br>H55AA: Communication parameters are not cleared.②<br>For the details of whether or not to clear parameters, refer to page A-5.<br>When a clear is performed with H9696 or H9966, communication related parameter settings also return to the initial values. When resuming the operation, set the parameters again.<br>Performing a clear will clear the instruction code HEC, HF3, and HFF settings.<br>Only H9966 and H55AA (all parameter clear) are valid during the password lock (refer to page 5-199). | 4 digits (A, C/D) |
| Parameter | Read | H00 to H63 | Refer to the instruction code (page A-5) and write and/or read parameter values as required.<br>When setting Pr. 100 and later, the link parameter extended setting must be set. | 4 digits (B.E/D) |
| | Write | H80 to HE3 | | 4 digits (A, C/D) |
| Link parameter Extended setting | Read | H7F | Parameter settings are switched according to the H00 to H0D settings.<br>For details of the settings, refer to the instruction code (page A-5). | 2 digits (B.E1/D) |
| | Write | HFF | | 2 digits (A1, C/D) |
| Second parameter changing (instruction code HFF = 1, 9) | Read | H6C | When setting the calibration parameters ③<br>H00: Frequency ④<br>H01: Parameter-set analog value<br>H02: Analog value input from terminal | 2 digits (B.E1/D) |
| | Write | HEC | | 2 digits (A1, C/D) |
| Multi command | Write/ Read | HF0 | Available for writing 2 commands, and monitoring 2 items for reading data (refer to page 5-606 for detail) | 10 digits (A2, C1/D) |

***Tab. 5-266:*** *Setting of the instruction codes and data (2)*

| Item | | Read/ Write | Instruc-tion code | Data description | Number of data digits (Format) ① |
|---|---|---|---|---|---|
| Inverter model monitor | Inverter model | Read | H7C | Reading inverter model in ASCII code.<br>"H20" (blank code) is set for blank area<br>Example of "FR-A840-1 (FM type)"<br>H46, H52, H2D, H41, H38, H34, H30, H2D, H31, H20, H20 ....H20 | 20 digits (B, E3/D) |
| | Capacity | Read | H7D | Reading inverter ND rated capacity in ASCII code.<br>Data is read in increments of 0.1kW, and rounds down to 0.01kW increments<br>"H20" (blank code) is set for blank area<br>Example:<br>0.75K..... " 7" (H20, H20, H20, H20, H20, H37) | 6 digits (B, E2/D) |

***Tab. 5-266:*** *Setting of the instruction codes and data (3)*

① Refer to page 5-590 for data formats (A, A1, A2, B, C, C1, D, E, E1, E2, E3, F)

② Turning OFF the power supply while clearing parameters with H5A5A or H55AA returns the communication parameter settings to the initial settings.

③ Refer to the calibration parameter list below for details on calibration parameters.

④ The gain frequency can be also written using Pr. 125 (instruction code: H99) or Pr. 126 (instruction code: H9A).

**NOTES**

Set 65520 (HFFF0) as a parameter value "8888" and 65535 (HFFFF) as "9999".

For the instruction codes HFF, HEC and HF3, their values are held once written but cleared to zero when an inverter reset or all clear is performed.

When a 32-bit parameter setting or monitored value is read and the read value exceeds HFFFF, the reply data will be HFFFF.

**Example** ▽ When reading the C3 (Pr. 902) and C6 (Pr. 904) settings from the inverter of station No. 0.

| | Computer send data | Inverter send data | Description |
|---|---|---|---|
| ❶ | ENQ 00 FF 0 01 70 | ACK 00 | Set "H01" in the extended link parameter |
| ❷ | ENQ 00 EC 0 01 79 | ACK 00 | Set "H01" in second parameter changing |
| ❸ | ENQ 00 5E 0 0A | STX 00 0000 ETX 20 | C3 (Pr. 902) is read. 0% is read. |
| ❹ | ENQ 00 60 0 F6 | STX 00 0000 ETX 20 | C6 (Pr. 904) is read. 0% is read. |

***Tab. 5-267:*** *Example for data transmission*

To read/write C3 (Pr. 902) or C6 (Pr. 904) after inverter reset or parameter clear, execute from (❶) again.

△

### List of calibration parameters

| Pr. | Name | Instruction code | | |
|---|---|---|---|---|
| | | Read | Write | Extended |
| C2 (902) | Terminal 2 frequency setting bias frequency | 5E | DE | 1 |
| C3 (902) | Terminal 2 frequency setting bias | 5E | DE | 1 |
| 125 (903) | Terminal 2 frequency setting gain frequency | 5F | DF | 1 |
| C4 (903) | Terminal 2 frequency setting gain | 5F | DF | 1 |
| C5 (904) | Terminal 4 frequency setting bias frequency | 60 | E0 | 1 |
| C6 (904) | Terminal 4 frequency setting bias | 60 | E0 | 1 |
| 126 (905) | Terminal 4 frequency setting gain frequency | 61 | E1 | 1 |
| C7 (905) | Terminal 4 frequency setting gain | 61 | E1 | 1 |
| C12 (917) | Terminal 1 bias frequency (speed) | 11 | 91 | 9 |
| C13 (917) | Terminal 1 bias (speed) | 11 | 91 | 9 |
| C14 (918) | Terminal 1 gain frequency (speed) | 12 | 92 | 9 |
| C15 (918) | Terminal 1 gain (speed) | 12 | 92 | 9 |
| C16 (919) | Terminal 1 bias command (torque/magnetic flux) | 13 | 93 | 9 |
| C17 (919) | Terminal 1 bias (torque/ magnetic flux) | 13 | 93 | 9 |

| Pr. | Name | Instruction code | | |
|---|---|---|---|---|
| | | Read | Write | Extended |
| C18 (920) | Terminal 1 gain command (torque/magnetic flux) | 14 | 94 | 9 |
| C19 (920) | Terminal 1 gain (torque/ magnetic flux) | 14 | 94 | 9 |
| C8 (930) | Current output bias signal | 1E | 9E | 9 |
| C9 (930) | Current output bias current | 1E | 9E | 9 |
| C10 (931) | Current output gain signal | 1F | 9F | 9 |
| C11 (931) | Current output gain current | 1F | 9F | 9 |
| C38 (932) | Terminal 4 bias command (torque/magnetic flux) | 20 | A0 | 9 |
| C39 (932) | Terminal 4 bias (torque/ magnetic flux) | 20 | A0 | 9 |
| C40 (933) | Terminal 4 gain command (torque/magnetic flux) | 21 | A1 | 9 |
| C41 (933) | Terminal 4 gain (torque/ magnetic flux) | 21 | A1 | 9 |
| C42 (934) | PID display bias coefficient | 22 | A2 | 9 |
| C43 (934) | PID display bias analog value | 22 | A2 | 9 |
| C44 (935) | PID display gain coefficient | 23 | A3 | 9 |
| C45 (935) | PID display gain analog value | 23 | A3 | 9 |

***Tab. 5-268:*** *Calibration parameters*

### Operation command

| Item | Instruction code | Bit length | Description ①③ | Example |
|---|---|---|---|---|
| Operation command | HFA | 8 bits | b0: AU (Terminal 4 input selection)<br>b1: Forward rotation command<br>b2: Reverse rotation command<br>b3: RL (Low-speed operation command)<br>b4: RM (Middle-speed operation command)<br>b5: RH (High-speed operation command)<br>b6: RT (Second function selection)<br>b7: MRS (Output stop) | [Example 1] H02 Forward rotation<br>b7 b0<br>0 0 0 0 0 0 1 0<br>[Example 2] H00 Stop<br>b7 b0<br>0 0 0 0 0 0 0 0 |
| Operation command (extended) | HF9 | 16 bits | b0: AU (Terminal 4 input selection)<br>b1: Forward rotation command<br>b2: Reverse rotation command<br>b3: RL (Low-speed operation command)<br>b4: RM (Middle-speed operation command)<br>b5: RH (High-speed operation command)<br>b6: RT (Second function selection)<br>b7: MRS (Output stop)<br>b8: JOG (Jog operation selection) ②<br>b9: CS (Selection of automatic restart after instantaneous power failure, flying start) ②<br>b10: STP (STOP) (Start self-holding selection) ②<br>b11: RES (Inverter reset) ②<br>b12 to b15: — | [Example 1] H0002 Forward rotation<br>b15 b0<br>0 0 0 0 0 0 0 0 0 0 0 0 0 0 1 0<br>[Example 2] H0800 low speed operation<br>(When Pr. 189 RES terminal function selection is set to "0")<br>b15 b0<br>0 0 0 0 1 0 0 0 0 0 0 0 0 0 0 0 |

***Tab. 5-269:*** *Operation commands*

① The signal within parentheses ( ) is the initial status. The description changes depending on the setting of Pr. 180 to Pr. 184, Pr. 187 (input terminal function selection) (page 5-409).

② JOG operation/automatic restart after instantaneous power failure/start self-holding selection/ reset cannot be controlled over a network, so in the initial status bit8 to bit11 are invalid. To use bit8 to bit11, change the signal by Pr. 185, Pr. 186, Pr. 188, or Pr. 189 (input terminal function selection) (page 5-409). (A reset can be executed by the instruction code HFD.)

③ In RS-485 communication from the PU connector, only the forward rotation command and reverse rotation command can be used.

### Inverter status monitor

| Item | Instruction code | Bit Length | Description ① | Example |
|---|---|---|---|---|
| Inverter status monitor | H7A | 8 bits | b0: RUN (Inverter running)<br>b1: During forward rotation<br>b2: During reverse rotation<br>b3: SU (Up to frequency)<br>b4: OL (Overload warning)<br>b5: IPF (Instantaneous power failure/undervoltage)<br>b6: FU (Output frequency detection)<br>b7: ABC1 (Fault) | [Example 1] H02 ••• During forward rotation<br>b7 b0<br>0 0 0 0 0 0 1 0<br>[Example 2] H80 ••• Stop at fault occurrence<br>b7 b0<br>1 0 0 0 0 0 0 0 |
| Inverter status monitor (extended) | H79 | 16 bits | b0: RUN (Inverter running)<br>b1: During forward rotation<br>b2: During reverse rotation<br>b3: SU (Up to frequency)<br>b4: OL (Overload warning)<br>b5: IPF (iInstantaneous power failure/undervoltage)<br>b6: FU (Output frequency detection)<br>b7: ABC1 (Fault)<br>b8: ABC2 (—)<br>b9: Safety monitor output<br>b10 to b14: —<br>b15: Fault occurrence | [Example 1] H0002 ••• During forward rotation<br>b15<br>0 0 0 0 0 0 0 0 0 0 0 0 0<br>[Example 2] H8080 ••• Stop at fault occurrence<br>b15<br>1 0 0 0 0 0 0 0 1 0 0 0 0 |

***Tab. 5-270:*** *Inverter status monitor*

① The signal within parentheses ( ) is the initial status. The description changes depending on the setting of Pr. 190 to Pr. 196 (output terminal function selection).

### Multi command (HF0)

● Sending data format from computer to inverter

| Format | Number of characters | | | | | | | | | | | | | | | | | | |
|---|---|---|---|---|---|---|---|---|---|---|---|---|---|---|---|---|---|---|---|
| | 1 | 2 | 3 | 4 | 5 | 6 | 7 | 8 | 9 | 10 | 11 | 12 | 13 | 14 | 15 | 16 | 17 | 18 | 19 |
| A2 | ENQ | Inverter station No. | | Instruction Code (HF0) | | Wait-ing time | Send data type ① | Receive data type ② | Data1 ③ | | | | Data2 ③ | | | | Sum check | | CR/LF |

● Reply data format from inverter to computer (No data error detected)

| Format | Number of characters | | | | | | | | | | | | | | | | | | |
|---|---|---|---|---|---|---|---|---|---|---|---|---|---|---|---|---|---|---|---|
| | 1 | 2 | 3 | 4 | 5 | 6 | 7 | 8 | 9 | 10 | 11 | 12 | 13 | 14 | 15 | 16 | 17 | 18 | 19 |
| C1 | STX | Inverter station No. | | Send data type ① | Receive data type ② | Error code 1 ⑤ | Error code 2 ⑤ | Data1 ④ | | | | Data2 ④ | | | | ETX | Sum check | | CR/LF |

① Specify the data type of sending data (from computer to inverter).

② Specify the data type of reply data (from inverter to computer).

③ Combination of data 1 and data 2 for sending

| Data type | Data 1 | Data 2 | Remarks |
|---|---|---|---|
| 0 | Operation command (extended) | Set frequency (RAM) | Run command (extended) is same as instruction code HF9 (Refer to page 5-604) |
| 1 | Operation command (extended) | Set frequency (RAM, EEPROM) | |

④ Combination of data 1 and data 2 for reply

| Data type | Data 1 | Data 2 | Remarks |
|---|---|---|---|
| 0 | Inverter status monitor (extended) | Output frequency (speed) | Inverter status monitor (extended) is same as instruction code H79. (Refer to page 5-605.) Replys the monitor item specified in instruction code HF3 for special monitor. (Refer to page 5-317.) |
| 1 | Inverter status monitor (extended) | Special monitor | |

⑤ Error code for sending data 1 is set in error code 1, and error code for sending data 2 is set in error code 2.
Mode error (HA), instruction code error (HB), data range error (HC) or no error (HF) is replied. (Refer to page 6-5 for the details of the error codes.)

## 5.15.6 Modbus-RTU communication specification

Operation by Modbus-RTU communication or parameter setting is possible by using the Modbus-RTU communication protocol from the RS-485 terminals of the inverter.

| Pr. | Name | Initial value | Setting range | Description |
|---|---|---|---|---|
| 331<br>N030 | RS-485 communication station number | 0 | 0 | Broadcast communication |
| | | | 1 to 247 | Inverter station number specification<br>Set the inverter station numbers when two or more inverters are connected to one personal computer. |
| 332<br>N031 | RS-485 communication speed | 96 | 3, 6, 12, 24, 48, 96, 192, 384, 576, 768, 1152 | Set the communication speed.<br>The setting value × 100 equals the communication speed.<br>For example, if 96 is set, the communication speed is 9600 bps. |
| 334<br>N034 | RS-485 communication parity check selection | 2 | 0 | Without parity check<br>Stop bit length 2 bits |
| | | | 1 | With parity check at odd numbers<br>Stop bit length 1 bit |
| | | | 2 | With parity check at even numbers<br>Stop bit length 1 bit |
| 343<br>N080 | Communication error count | 0 | — | Displays the communication error count during Modbus-RTU communication. Read-only. |
| 539<br>N002 | Modbus-RTU communication check time interval | 9999 | 0 | Modbus-RTU communication, but the inverter trips in the NET operation mode. |
| | | | 0.1 to 999.8 s | Set the interval of the communication check (signal loss detection) time. (same specifications as Pr. 122) |
| | | | 9999 | No communication check (signal loss detection) |
| 549<br>N000 | Protocol selection | 0 | 0 | Mitsubishi inverter protocol (computer link) |
| | | | 1 | Modbus-RTU protocol |

**NOTES**

To use the Modbus-RTU protocol, set "1" to Pr. 549 "Protocol selection".

If Modbus-RTU communication is performed from the master to the address 0 (station number 0), the data is broadcasted, and the inverter does not send any reply to the master. To obtain replies from the inverter, set Pr. 331 "RS-485 communication station number" ≠ "0 (initial value)". Some functions are disabled in broadcast communication. (Refer to page 5-610.)

If a communication option is mounted with Pr. 550 "NET mode operation command source selection" = "9999 (initial value)", commands (operation commands) transmitted via RS-485 terminals become invalid. (Refer to page 5-266.)

### Communication specifications

- The communication specifications are given below.

| Item | | Description | Related parameter |
|---|---|---|---|
| Communication protocol | | Modbus-RTU protocol | Pr. 549 |
| Conforming standard | | EIA-485 (RS-485) | — |
| Connectable units | | 1:N (maximum 32 units), setting is 0 to 247 stations | Pr. 331 |
| Communication Speed | | Selected among 300/600/1200/2400/4800/9600/19200/38400/57600/76800/115200 bps | Pr. 332 |
| Control procedure | | Asynchronous system | — |
| Communication method | | Half-duplex system | — |
| Communication specifications | Character system | Binary (fixed at 8 bits) | — |
| | Start bit | 1 bit | — |
| | Stop bit length | Select from the following three types:<br>No parity check, stop bit length 2 bits<br>Odd parity check , stop bit length 1 bit<br>Even parity check, stop bit length 1 bit | Pr. 334 |
| | Parity check | | |
| | Error check | CRC code check | — |
| | Terminator | Not used | — |
| Waiting time setting | | Not used | — |

***Tab. 5-271:*** *Communication specifications*

### Outline

- The Modbus communication protocol was developed by Modicon for programmable controllers.
- The Modbus protocol uses exclusive message frames to perform serial communication between a master and slaves. These exclusive message frames are provided with a feature called "functions" that allows data to be read or written. These functions can be used to read or write parameters from the inverter, write input commands to the inverter or check the inverter's operating status, for example. This product classifies the data of each inverter into holding register area (register address 40001 to 49999). The master can communicate with inverters (for instance,. slaves) by accessing pre-assigned holding register addresses.

**NOTE**

There are two serial transmission modes, the ASCII (American Standard Code for Information Interchange) mode and the RTU (Remote Terminal Unit) mode. However, this product supports only the RTU mode, which transfers 1 byte data (8 bits) as it is. Also, only communication protocol is defined by the Modbus protocol. Physical layers are not stipulated.

### Message format

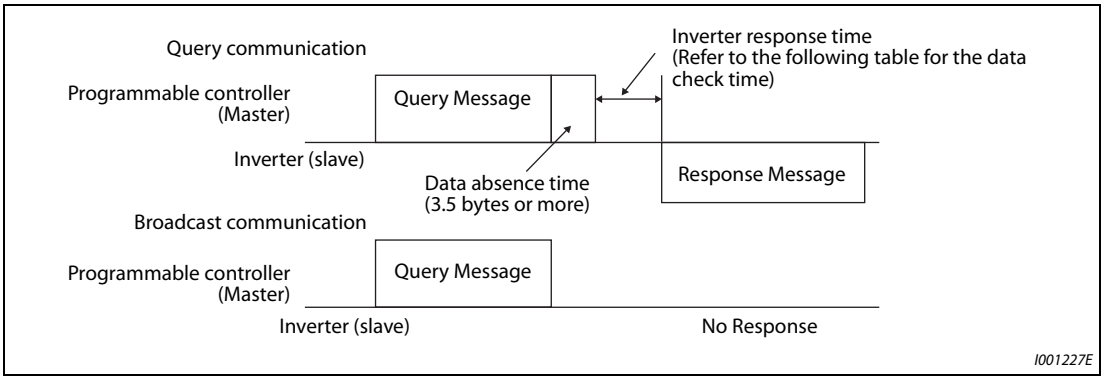


***Fig. 5-304:*** *Message format*

- Data check time

| Item | Check time |
|---|---|
| Various monitors, operation command, Frequency setting (RAM) | < 12 ms |
| Parameter read/write, Frequency setting (EEPROM) | < 30 ms |
| Parameter clear / all clear | < 5 s |
| Reset command | No answer |

***Tab. 5-272:*** *Data check time*

- Query
  A message is sent to the slave (for instance, the inverter) having the address specified by the master.
- Normal Response
  After the query from the master is received, the slave executes the request function, and returns the corresponding normal response to the master.
- Error Response
  When an invalid function code, address or data is received by the slave, the error response is returned to the master.
  This response is appended with an error code that indicates the reason why the request from the master could not be executed.
  This response cannot be returned for errors, detected by the hardware, frame error and CRC check error.
- Broadcast
  The master can broadcast messages to all slaves by specifying address 0. All slaves that receive a message from the master execute the requested function. With this type of communication, slaves do not return a response to the master.

**NOTE**

During broadcast communication, functions are executed regarded of the set inverter station number (Pr. 331).

**Message frame (protocol)**

- Communication method
  Basically, the master sends a Query message (question), and slaves return the Response message (response). At normal communication, the Device Address and Function Code are copied as they are, and at erroneous communication (illegal function code or data code), bit7 (= 80 h) of the Function Code is turned ON, and the error code is set at Data Bytes.

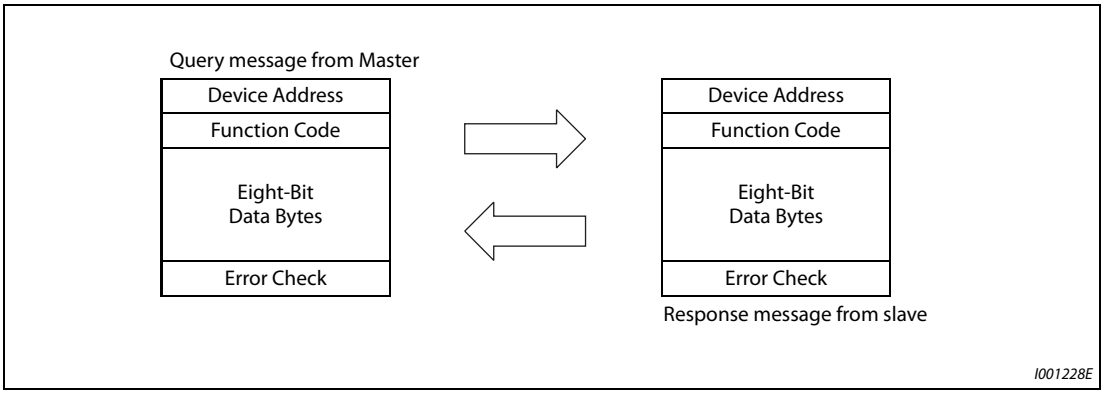


***Fig. 5-305:*** *Data transmission*

Message frames comprise of the four message fields shown in the figures above.

A slave recognizes message data as a message by the message data being prefixed and appended with a no data time of 3.5 characters (T1: start/end).

● Details of protocol

The following table explains the four message fields.

| Start | ADDRESS | FUNCTION | DATA | CRC CHECK | | End |
|---|---|---|---|---|---|---|
| T1 | 8 bits | 8 bits | n × 8 bits | L<br>8 bits | H<br>8 bits | T1 |

| Message field | Description |
|---|---|
| ADDRESS field | 0 to 247 can be set in single byte lengths (8 bits). Set "0" when sending broadcast messages (instructions to all addresses), and "1 to 247" to send messages to individual slaves.<br>The address set by the master is also returned when the response from the slave is.<br>The value set to Pr. 331 "RS-485 communication station number" is the slave address. |
| FUNCTION field | 1 to 255 can be set in single byte lengths (8 bits) for the function code. The master sets the function to be sent to the slave as the request, and the slave performs the requested operation. "Function code list" summarizes the supported function codes. An error response is generated when a function code other than "Function code list" is set.<br>At a response from the slave, the function code set by the master is returned in the case of a normal response. At an error response, H80 + the function code is returned. |
| DATA field | The format changes according to the function code. (Refer to page 5-611.) The data, for example, includes the byte count, number of bytes and accessing content of holding registers. |
| CRC CHECK field | Errors in the received message frame are detected. Errors are detected in the CRC check, and the message is appended with data 2 bytes long. When the message is appended with the CRC, the lower bytes are appended first, followed by the upper bytes.<br>The CRC value is calculated by the sender that appends the message with the CRC. The receiver recalculates the CRC while the message is being received, and compares the calculation result against the actual value that was received in the error check field. If the two values do not match, the result is treated as an error. |

***Tab. 5-273:*** *Protocol details*

### Function code list

| Function name | Read/ Write | Code | Outline | Broadcast communica-tion | Message format reference page |
|---|---|---|---|---|---|
| Read Holding Register | Read | H03 | The data of the holding registers is read.<br>The various data of the inverter can be read from Modbus registers.<br>System environmental variable (Refer to page 5-618.)<br>Real time monitor (Refer to page 5-318.)<br>Faults history (Refer to page 5-622.)<br>Model information monitor (Refer to page 5-622.)<br>Inverter parameters (Refer to page 5-620.) | Not available | 5-612 |
| Preset Single Register | Write | H06 | Data is written to holding registers.<br>Data can be written to Modbus registers to output instructions to the inverter or set parameters.<br>System environmental variable (Refer to page 5-618.)<br>Inverter parameters (Refer to page 5-620.) | Available | 5-613 |
| Diagnostics | Read | H08 | Functions are diagnosed. (communication check only)<br>A communication check can be made since the query message is sent and the query message is returned as it is as the return message (subfunction code H00 function).<br>Subfunction code H00 (Return Query Data) | Not available | 5-614 |
| Preset Multiple Registers | Read | H10 | Data is written to consecutive multiple holding registers.<br>Data can be written to consecutive multiple Modbus registers to output instructions to the inverter or set parameters.<br>System environmental variable (Refer to page 5-618.)<br>Inverter parameters (Refer to page 5-620.) | Available | 5-615 |
| Read holding register access log | Read | H46 | The number of registers that were successfully accessed by the previous communication is read.<br>Queries by function codes H03 and H10 are supported.<br>The number and start address of holding registers successfully accessed by the previous communication are returned.<br>"0" is returned for both the number and start address for queries other than function code H03 and H10. | Not available | 5-616 |

***Tab. 5-274:*** *Function code list*

### Read Holding Register (reading of data of holding registers) (H03 or 03)

● Query message

| ❶ Slave Address | ❷ Function | ❸ Starting Address | | ❹ . No. of Points | | CRC Check | |
|---|---|---|---|---|---|---|---|
| (8 bits) | H03 (8 bits) | H (8 bits) | L (8 bits) | H (8 bits) | L (8 bits) | L (8 bits) | H (8 bits) |

● Normal response (Response message)

| ❶ Slave Address | ❷ Function | ❺ Byte Count | ❻ Data | | | CRC Check | |
|---|---|---|---|---|---|---|---|
| (8 bits) | H03 (8 bits) | (8 bits) | H (8 bits) | L (8 bits) | ... (n × 16 bits) | L (8 bits) | H (8 bits) |

● Query message setting

| Message | | Description |
|---|---|---|
| ❶ | Slave Address | Set the address to send messages to. Broadcast communication is not possible. (Invalid when "0" is set.) |
| ❷ | Function | Set H03. |
| ❸ | Starting Address | Set the address from which to start reading of data from the holding register.<br>Start address = start register address (decimal) – 40001<br>For example, when start register address 0001 is set, the data of holding register address 40002 is read. |
| ❹ | No. of Points | Set the number of holding registers to read. Data can be read from up to 125 registers. |

***Tab. 5-275:*** *Description of the query message*

● Content of normal response

| Message | | Description |
|---|---|---|
| ❺ | Byte Count | The setting range is H02 to HFA (2 to 250).<br>Twice the number of reads specified by ❹ is set. |
| ❻ | Data | The amount of data specified by ❹ is set. Read data is output Hi bytes first followed by Lo bytes, and is arranged as follows: data of start address, data of start address + 1, data of start address + 2, and so forth. |

***Tab. 5-276:*** *Description of normal response*

**Example ▽** Read the register values of 41004 (Pr. 4) to 41006 (Pr. 6) from slave address 17 (H11).

Query message

| Slave Address | Function | Starting Address | | No. of Points | | CRC Check | |
|---|---|---|---|---|---|---|---|
| H11 (8 bits) | H03 (8 bits) | H03 (8 bits) | HEB (8 bits) | H00 (8 bits) | H03 (8 bits) | H77 (8 bits) | H2B (8 bits) |

Response message

| Slave Address | Function | Byte Count | Data | | | | | | CRC Check | |
|---|---|---|---|---|---|---|---|---|---|---|
| H11 (8 bits) | H03 (8 bits) | H06 (8 bits) | H17 (8 bits) | H70 (8 bits) | H0B (8 bits) | HB8 (8 bits) | H03 (8 bits) | HE8 (8 bits) | H2C (8 bits) | HE6 (8 bits) |

Read value
Register 41004 (Pr. 4): H1770 (60.00 Hz)
Register 41005 (Pr. 5): H0BB8 (30.00 Hz)
Register 41006 (Pr. 6): H03E8 (10.00 Hz)

△

**Preset Single Register (writing of data to holding registers) (H06 or 06)**

- The content of the "system environmental variables" and "inverter parameters" assigned to the holding register area (refer to the register list (page 5-618)) can be written.
- Query message

| ❶ Slave Address | ❷ Function | ❸ Register Address | | ❹ Preset Data | | CRC Check | |
|---|---|---|---|---|---|---|---|
| (8 bits) | H06 (8 bits) | H (8 bits) | L (8 bits) | H (8 bits) | L (8 bits) | L (8 bits) | H (8 bits) |

- Normal response (Response message)

| ❶ Slave Address | ❷ Function | ❸ Register Address | | ❹ Preset Data | | CRC Check | |
|---|---|---|---|---|---|---|---|
| (8 bits) | H06 (8 bits) | H (8 bits) | L (8 bits) | H (8 bits) | L (8 bits) | L (8 bits) | H (8 bits) |

- Query message setting

| Message | | Description |
|---|---|---|
| ❶ | Slave Address | Set the address to send messages to. Setting "0" enables broadcast communication. |
| ❷ | Function | Set H06. |
| ❸ | Register Address | Set the address from data is written to the holding register.<br>Register address = holding register address (decimal) - 40001<br>For example, when register address 0001 is set, data is written to holding register address 40002. |
| ❹ | Preset Data | Set the data to write to the holding register. Write data is fixed at 2 bytes. |

***Tab. 5-277:*** *Description of the query message*

- Content of normal response
  With a normal response, the content is the same as ❶ to ❹ (including the CRC check) query messages.
  In the case of broadcast communication, no response is returned.

**Example ▽** Write 60 Hz (H1770) to 40014 (running frequency) of slave address 5 (H05).

Query message

| Slave Address | Function | Register Address | | Preset Data | | CRC Check | |
|---|---|---|---|---|---|---|---|
| H05 (8 bits) | H06 (8 bits) | H00 (8 bits) | H0D (8 bits) | H17 (8 bits) | H70 (8 bits) | H17 (8 bits) | H99 (8 bits) |

Normal response (Response message)
Same data as query message.

△

**NOTE** With broadcast communication, no response is generated even if a query is executed, so when the next query is made, it must be made after waiting for the inverter data processing time after the previous query is executed.

**Diagnostics (diagnosis of functions) (H08 or 08)**

- A communication check can be made since the query message is sent and the query message is returned as it is as the return message (subfunction code H00 function).
  Subfunction code H00 (Return Query Data)

- Query message

| ❶ Slave Address | ❷ Function | ❸ Subfunction | | ❹ Data | | CRC Check | |
|---|---|---|---|---|---|---|---|
| (8 bits) | H08 (8 bits) | H00 (8 bits) | H00 (8 bits) | H (8 bits) | L (8 bits) | L (8 bits) | H (8 bits) |

- Normal response (Response message)

| ❶ Slave Address | ❷ Function | ❸ Subfunction | | ❹ Data | | CRC Check | |
|---|---|---|---|---|---|---|---|
| (8 bits) | H08 (8 bits) | H00 (8 bits) | H00 (8 bits) | H (8 bits) | L (8 bits) | L (8 bits) | H (8 bits) |

- Query message setting

| Message | | Description |
|---|---|---|
| ❶ | Slave Address | Set the address to send messages to. Broadcast communication is not possible. (Invalid when "0" is set.) |
| ❷ | Function | Set H08. |
| ❸ | Subfunction | Set H0000. |
| ❹ | Data | Any data 2 bytes long can be set. Setting range is H0000 to HFFFF. |

***Tab. 5-278:*** *Description of the query message*

- Content of normal response
  With a normal response, the content is the same as ❶ to ❹ (including the CRC check) query messages.

**NOTE**

With broadcast communication, no response is generated even if a query is executed, so when the next query is made, it must be made after waiting for the inverter data processing time after the previous query is executed.

**Preset Multiple Registers (writing of data to multiple holding registers) (H10 or 16)**

- Data can be written to multiple holding registers.
- Query message

| ❶ Slave Address | ❷ Function | ❸ Starting Address | | ❹ No. of Registers | | ❺ ByteCount | ❻ Data | | | CRC Check | |
|---|---|---|---|---|---|---|---|---|---|---|---|
| (8 bits) | H10 (8 bits) | H (8 bits) | L (8 bits) | H (8 bits) | L (8 bits) | (8 bits) | H (8 bits) | L (8 bits) | ... (n × 2 × 8 bits) | L (8 bits) | H (8 bits) |

- Normal response (Response message)

| ❶ Slave Address | ❷ Function | ❸ Starting Address | | ❹ No. of Registers | | CRC Check | |
|---|---|---|---|---|---|---|---|
| (8 bits) | H10 (8 bits) | H (8 bits) | L (8 bits) | H (8 bits) | L (8 bits) | L (8 bits) | H (8 bits) |

- Query message setting

| Message | | Description |
|---|---|---|
| ❶ | Slave Address | Set the address to send messages to. Setting "0" enables broadcast communication. |
| ❷ | Function | Set H10. |
| ❸ | Starting Address | Set the address from which to start writing of data to the holding register.<br>Start address = start register address (decimal) - 40001<br>For example, when start register address 0001 is set, the data of holding register address 40002 is read. |
| ❹ | No. of Points | Set the number of holding registers to write to. Data can be written to up to 125 registers. |
| ❺ | Byte Count | The setting range is H02 to HFA (2 to 250).<br>Set twice the value specified by d. |
| ❻ | Data | Set the amount of data specified by d. Set write data Hi bytes first followed by Lo bytes, and arrange it as follows: data of start address, data of start address+1, data of start address+2, and so forth. |

***Tab. 5-279:*** *Description of the query message*

- Content of normal response
  With a normal response, the content is the same as ❶ to ❹ (including the CRC check) query messages.

**Example ▽** Write 0.5 s (H05) to 41007 (Pr. 7) and 1 s (H0A) to 41008 (Pr. 8) of slave address 25 (H19).

Query message

| Slave Address | Func-tion | Starting Address | | No. of Points | | Byte Count | Data | | | | CRC Check |
|---|---|---|---|---|---|---|---|---|---|---|---|
| H19 (8 bits) | H10 (8 bits) | H03 (8 bits) | HEE (8 bits) | H00 (8 bits) | H02 (8 bits) | H04 (8 bits) | H00 (8 bits) | H05 (8 bits) | H00 (8 bits) | H0A (8 bits) | H86 (8 bits) |

Normal response (Response message)

| Slave Address | Function | Starting Address | | No. of Points | | CRC Check | |
|---|---|---|---|---|---|---|---|
| H19 (8 bits) | H10 (8 bits) | H03 (8 bits) | HEE (8 bits) | H00 (8 bits) | H02 (8 bits) | H22 (8 bits) | H61 (8 bits) |

△

**Read Holding Register access Log (H46 or 70)**

- Queries by function codes H03 and H10 are supported.
  The number and start address of holding registers successfully accessed by the previous communication are returned.
  "0" is returned for both the number and start address for queries other than the function codes.

- Query message

| ❶ Slave Address | ❷ Function | CRC Check | |
|---|---|---|---|
| (8 bits) | H46<br>(8 bits) | L<br>(8 bits) | H<br>(8 bits) |

- Normal response (Response message)

| ❶ Slave Address | ❷ Function | ❸ Starting Address | | ❹ No. of Points | | CRC Check | |
|---|---|---|---|---|---|---|---|
| (8 bits) | H46<br>(8 bits) | H<br>(8 bits) | L<br>(8 bits) | H<br>(8 bits) | L<br>(8 bits) | L<br>(8 bits) | H<br>(8 bits) |

- Query message setting

| Message | | Description |
|---|---|---|
| ❶ | Slave Address | Set the address to send messages to. Broadcast communication is not possible.<br>(Invalid when "0" is set.) |
| ❷ | Function | Set H46. |

***Tab. 5-280:*** *Description of the query message*

- Content of normal response

| Message | | Description |
|---|---|---|
| ❸ | Starting Address | The start address of the holding register that was successfully accessed is returned.<br>Start address = start register address (decimal) – 40001<br>For example, when start address 0001 is returned, the holding register address that was successfully accessed is 40002. |
| ❹ | No. of Points | The number of holding registers that were successfully accessed is returned. |

***Tab. 5-281:*** *Description of normal response*

**Example ▽**

Read the successful register start address and number of successful accesses from slave address 25 (H19).

Query message

| Slave Address | Function | CRC Check | |
|---|---|---|---|
| H19<br>(8 bits) | H46<br>(8 bits) | H8B<br>(8 bits) | HD2<br>(8 bits) |

Normal response (Response message)

| Slave Address | Function | Starting Address | | No. of Points | | CRC Check | |
|---|---|---|---|---|---|---|---|
| H19<br>(8 bits) | H10<br>(8 bits) | H03<br>(8 bits) | HEE<br>(8 bits) | H00<br>(8 bits) | H02<br>(8 bits) | H22<br>(8 bits) | H61<br>(8 bits) |

Two successful reads of start address 41007 (Pr. 7) are returned.

△

**Error response**

- An error response is returned if the query message received from the master contains an illegal function, address or data.
  No response is returned for parity, CRC, overrun, framing, and Busy errors.

**NOTE** No response is also returned in the case of broadcast communication.

- Error response (Response message)

| ❶ Slave Address | ❷ Function | ❸ Exception Code | CRC Check | |
|---|---|---|---|---|
| (8 bits) | H80 + Function (8 bits) | (8 bits) | L (8 bits) | H (8 bits) |

| | Message | Description |
|---|---|---|
| ❶ | Slave Address | Set the address received from the master. |
| ❷ | Function | The function code requested by the master + H80 is set. |
| ❸ | Exception Code | The codes in the following table are set. |

***Tab. 5-282:*** *Description of response data*

- Error code list

| Code | Error Item | Error description |
|---|---|---|
| 01 | ILLEGAL FUNCTION | The query message from the master is set with a function code that cannot be handled by the slave. |
| 02 | ILLEGAL DATA ADDRESS ① | The query message from the master is set with a register address that cannot be handled by the inverter.<br>(No parameter, parameter cannot be read, parameter cannot be written) |
| 03 | ILLEGAL DATA VALUE | The query message from the master is set with data that cannot be handled by the inverter.<br>(Out of parameter write range, a mode is specified, other error) |

***Tab. 5-283:*** *Error code list*

① An error does not occur in the following cases:
- Function code H03 (read data of holding register)
  When there are 1 or more number of reads (No. of Points) and there is 1 or more holding register from where data can be read
- Function code H10 (write data to multiple holding registers)
  When there are 1 or more number of writes (No. of Points) and there is 1 or more holding registers to which data can be written.

In other words, when function code H03 or H10 is used and multiple holding registers are accessed, an error will not occur even if a non-existent holding register or holding register that cannot be read or written is accessed.

**NOTE** An error will occur if all accesses holding registers do not exist. The data read value of non-existent holding registers is 0, and data is invalid when written to non-existent holding registers.

### Error detection of message data

The following errors are detected in message data from the master. The inverter is not tripped even if an error is detected.

| Error item | Error description | Inverter operation |
|---|---|---|
| Parity error | The data received by the inverter is different from the specified parity (Pr. 334 setting). | When this error occurs, Pr. 343 is incremented by one.<br>When this error occurs, the LF signal is output. |
| Framing error | The data received by the inverter is different from the stop bit length (Pr. 334) setting. | |
| Overrun error | The next data has been sent by the master before the inverter completes receiving the preceding data. | |
| Message frame error | The data length of the message frame is checked, and an error is generated if the received data length is less than 4 bytes. | |
| CRC check error | An error is generated if the data in the message frame does not match the calculation result. | |

***Tab. 5-284:*** *Error check items*

**NOTE**

The LF signal can be assigned to an output terminal by setting Pr. 190 to Pr. 196 (output terminal function selection). Changing the terminal assignment may affect other functions. Set parameters after confirming the function of each terminal.

### Modbus register

- System environmental variables

| Register | Definition | Read/Write | Remarks |
|---|---|---|---|
| 40002 | Inverter reset | Write | Any value can be written |
| 40003 | Parameter clear | Write | Set H965A for the write value. |
| 40004 | All parameter clear | Write | Set H99AA for the write value. |
| 40006 | Parameter clear ① | Write | Set H5A96 for the write value. |
| 40007 | All parameter clear ① | Write | Set HAA99 for the write value. |
| 40009 | Inverter status/control input command ② | Read/Write | Refer to the following. |
| 40010 | Operation mode/inverter setting ③ | Read/Write | Refer to the following. |
| 40014 | Running frequency (RAM value) | Read/Write | The display can be changed to the rotations per minute using Pr. 37, Pr. 144 and Pr. 811. (Refer to page 5-314.) |
| 40015 | Running frequency (EEPROM value) | Write | |

***Tab. 5-285:*** *System environment variable*

① Communication parameter settings are not cleared.

② At a write, the data is set as the control input command.
At a read, the data is read as the inverter running status.

③ At a write, the data is set as the operation mode setting.
At a read, the data is read as the operation mode setting.

| Bit | Definition | |
|---|---|---|
| | **Control input command** | **Inverter status** |
| 0 | Stop command | RUN (Inverter running) ② |
| 1 | Forward rotation command | During forward rotation |
| 2 | Reverse rotation command | During reverse rotation |
| 3 | RH (High-speed operation command) ① | SU (Up to frequency) ② |
| 4 | RM (Middle-speed operation command) ① | OL (Overload warning) ② |
| 5 | RL (Low-speed operation command) ① | IPF (Instantaneous power failure/undervoltage) ② |
| 6 | JOG (Jog operation selection) ① | FU (Output frequency detection) ② |
| 7 | RT (Second function selection) ① | ABC1 (Fault) ② |
| 8 | AU (Terminal 4 input selection) ① | ABC2 (—) ② |
| 9 | CS (Selection of automatic restart after instantaneous power failure, flying start) ① | Safety monitor output |
| 10 | MRS (Output stop) ① | 0 |
| 11 | STP (STOP) (Start self-holding selection) ① | 0 |
| 12 | RES (Inverter reset) ① | 0 |
| 13 | 0 | 0 |
| 14 | 0 | 0 |
| 15 | 0 | Fault occurrence |

***Tab. 5-286:*** *Inverter status/control input command*

① The signal within parentheses ( ) is the initial status. The description changes depending on the setting of Pr. 180 to Pr. 189 (input terminal function selection) (page 5-409).
For each of the assigned signals, some signals are enabled by NET and some are disabled. (Refer to page 5-271.)

② The signal within parentheses ( ) is the initial status. The description changes depending on the setting of Pr. 190 to Pr. 196 (output terminal function selection) (page 5-350).

| Mode | Read value | Write value |
|---|---|---|
| EXT | H0000 | H0010 ① |
| PU | H0001 | H0011 ① |
| EXT<br>JOG | H0002 | — |
| PU<br>JOG | H0003 | — |
| NET | H0004 | H0014 |
| PU+EXT | H0005 | — |

***Tab. 5-287:*** *Operation mode/inverter setting*

① Enable/disable parameter writing by Pr. 79 and Pr. 340 settings. For the details, refer to page 5-264.

Restrictions in each operation mode conform with the computer link specification.

- Real-time monitor
  Refer to page 5-317 for the register numbers and monitored items of the real time monitor.

● Parameters

| Pr. | Register | Name | Read/ Write | Remarks |
|---|---|---|---|---|
| 0 to 999 | 41000 to 41999 | For details on parameter names, refer to the parameter list (page 5-2). | Read/ Write | The parameter number + 41000 is the register number. |
| C2 (902) | 41902 | Terminal 2 frequency setting bias (frequency) | Read/ Write | |
| C3 (902) | 42092 | Terminal 2 frequency setting bias (analog value) | Read/ Write | Analog value (%) set to C3 (902) |
| | 43902 | Terminal 2 frequency setting bias (terminal analog value) | Read | Analog value (%) of voltage (current) applied to terminal 2 |
| 125 (903) | 41903 | Terminal 2 frequency setting gain (frequency) | Read/ Write | |
| C4 (903) | 42093 | Terminal 2 frequency setting gain (analog value) | Read/ Write | Analog value (%) set to C4 (903) |
| | 43903 | Terminal 2 frequency setting gain (terminal analog value) | Read | Analog value (%) of voltage (current) applied to terminal 2 |
| C5 (904) | 41904 | Terminal 4 frequency setting bias (frequency) | Read/ Write | |
| C6 (904) | 42094 | Terminal 4 frequency setting bias (analog value) | Read/ Write | Analog value (%) set to C6 (904) |
| | 43904 | Terminal 4 frequency setting bias (terminal analog value) | Read | Analog value (%) of current (voltage) applied to terminal 4 |
| 126 (905) | 41905 | Terminal 4 frequency setting gain (frequency) | Read/ Write | |
| C7 (905) | 42095 | Terminal 4 frequency setting gain (analog value) | Read/ Write | Analog value (%) set to C7 (905) |
| | 43905 | Terminal 4 frequency setting gain (terminal analog value) | Read | Analog value (%) of current (voltage) applied to terminal 4 |
| C12 (917) | 41917 | Terminal 1 bias frequency (speed) | Read/ Write | |
| C13 (917) | 42107 | Terminal 1 bias (speed) | Read/ Write | Analog value (%) set to C13 (917) |
| | 43917 | Terminal 1 bias (speed) (terminal analog value) | Read | Analog value (%) of voltage applied to terminal 1 |
| C14 (918) | 41918 | Terminal 1 gain frequency (speed) | Read/ Write | |
| C15 (918) | 42108 | Terminal 1 gain (speed) | Read/ Write | Analog value (%) set to C15 (918) |
| | 43918 | Terminal 1 gain (speed) (terminal analog value) | Read | Analog value (%) of voltage applied to terminal 1 |
| C16 (919) | 41919 | Terminal 1 bias command (torque/magnetic flux) | Read/ Write | |
| C17 (919) | 42109 | Terminal 1 bias (torque/magnetic flux) | Read/ Write | Analog value (%) set to C17 (919) |
| | 43919 | Terminal 1 bias (torque/magnetic flux) (terminal analog value) | Read | Analog value (%) of voltage applied to terminal 1 |
| C18 (920) | 41920 | Terminal 1 gain command (torque/magnetic flux) | Read/ Write | |
| C19 (920) | 42110 | Terminal 1 gain (torque/magnetic flux) | Read/ Write | Analog value (%) set to C19 (920) |
| | 43920 | Terminal 1 gain (torque/magnetic flux) (terminal analog value) | Read | Analog value (%) of voltage applied to terminal 1 |
| C9 (930) | 42120 | Current output bias current | Read/ Write | Analog value (%) set to C9 (930) |
| C11 (931) | 42121 | Current output gain current | Read/ Write | Analog value (%) set to C11 (931) |
| C38 (932) | 41932 | Terminal 4 bias command (torque/magnetic flux) | Read/ Write | |

***Tab. 5-288:*** *Parameters (1)*

| Pr. | Register | Name | Read/ Write | Remarks |
|---|---|---|---|---|
| C39 (932) | 42122 | Terminal 4 bias (torque/magnetic flux) | Read/ Write | Analog value (%) set to C39 (932) |
| | 43932 | Terminal 4 bias (torque/magnetic flux) (terminal analog value) | Read | Analog value (%) of current (voltage) applied to terminal 4 |
| C40 (933) | 41933 | Terminal 4 gain command (torque/magnetic flux) | Read/ Write | |
| C41 (933) | 42123 | Terminal 4 gain (torque/magnetic flux) | Read/ Write | Analog value (%) set to C41 (933) |
| | 43933 | Terminal 4 gain (torque/magnetic flux) (terminal analog value) | Read | Analog value (%) of current (voltage) applied to terminal 4 |
| C42 (934) | 41934 | PID display bias coefficient | Read/ Write | |
| C43 (934) | 42124 | PID display bias analog value | Read/ Write | Analog value (%) set to C43 (934) |
| | 43934 | PID display bias analog value (terminal analog value) | Read | Analog value (%) of current (voltage) applied to terminal 4 |
| C44 (935) | 41935 | PID display gain coefficient | Read/ Write | |
| C45 (935) | 42125 | PID display gain analog value | Read/ Write | Analog value (%) set to C45 (935) |
| | 43935 | PID display gain analog value (terminal analog value) | Read | Analog value (%) of current (voltage) applied to terminal 4 |
| 1000 to 1999 | 45000 to 45359 | For details on parameter names, refer to the parameter list (page 5-2). | Read/ Write | The parameter number + +44000 is the register number. |

***Tab. 5-288:*** *Parameters (2)*

● Faults history

| Register | Definition | Read/Write | Remarks |
|---|---|---|---|
| 40501 | Faults history 1 | Read/Write | Data is 2 bytes and so is stored in "H00○○".<br>The lowest 1 byte can be referred to for the error code.<br>(For details on error codes, refer to page 6-5.)<br>The faults history is batch-cleared by writing to register 40501.<br>Set any value for the data. |
| 40502 | Faults history 2 | Read | |
| 40503 | Faults history 3 | Read | |
| 40504 | Faults history 4 | Read | |
| 40505 | Faults history 5 | Read | |
| 40506 | Faults history 6 | Read | |
| 40507 | Faults history 7 | Read | |
| 40508 | Faults history 8 | Read | |

***Tab. 5-289:*** *Faults history*

● Model information monitor

| Register | Definition | Read/Write | Remarks |
|---|---|---|---|
| 44001 | Model (First and second characters) | Read | Reading inverter type in ASCII code.<br>"H20" (blank code) is set for blank area.<br>Example of FR-A840-1 (FM type)<br>H46, H52, H2D, H41, H38, H34, H30, H2D, H31, H20.....H20 |
| 44002 | Model (Third and fourth characters) | Read | |
| 44003 | Model (Fifth and sixth characters) | Read | |
| 44004 | Model (Seventh and eighth characters) | Read | |
| 44005 | Model (Ninth and tenth characters) | Read | |
| 44006 | Model (Eleventh and twelfth characters) | Read | |
| 44007 | Model (Thirteenth and fourteenth characters) | Read | |
| 44008 | Model (Fifteenth and sixteenth characters) | Read | |
| 44009 | Model (Seventeenth and eighteenth characters) | Read | |
| 44010 | Model (Nineteenth and twentieth characters) | Read | |
| 44011 | Capacity (First and second characters) | Read | Reading inverter capacity in ASCII code.<br>Data is read in increments of 0.1 kW, and rounds down to 0.01 kW increments.<br>"H20" (blank code) is set for blank area.<br>Example:<br>0.75K....."7"<br>(H20, H20, H20, H20, H20, H37) |
| 44012 | Capacity (Third and fourth characters) | Read | |
| 44013 | Capacity (Fifth and sixth characters) | Read | |

***Tab. 5-290:*** *Inverter type monitor*

**NOTE** When a 32-bit parameter setting or monitored value is read and the read value exceeds HFFFF, the reply data will be HFFFF.

**Pr. 343 "Communication error count"**

The communication error occurrence count can be checked.

| Parameter | Setting range | Minimum setting range | Initial value |
|---|---|---|---|
| 343 | (Read only) | 1 | 0 |

***Tab. 5-291:*** *Number of communication errors*

**NOTE** The communication error count is temporarily stored in the RAM memory. The value is not stored in EEPROM, and so is cleared to 0 when power is reset and the inverter is reset.

**Output signal LF "alarm output (communication error warning)"**

During a communication error, the alarm signal (LF signal) is output by open collector output. Assign the terminal to be used using any of Pr. 190 to Pr. 196 (output terminal function selection).

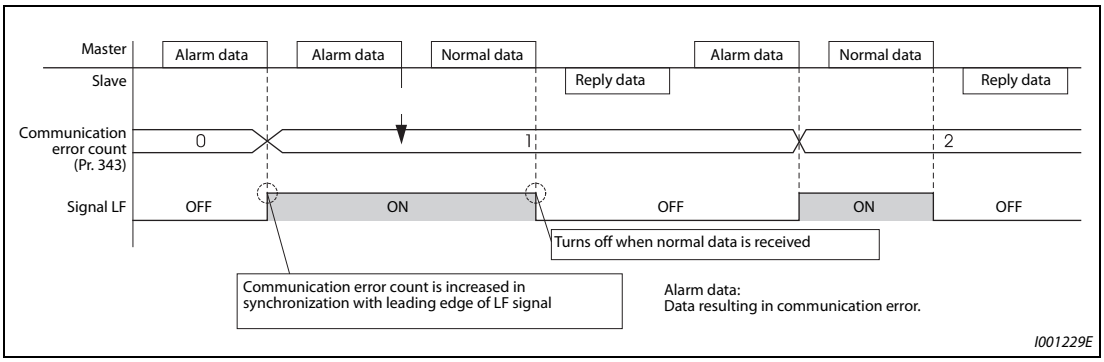


***Fig. 5-306:*** *Output of the LF signal*

**NOTE**

The LF signal can be assigned to an output terminal by setting Pr. 190 to Pr. 196. Changing the terminal assignment may affect other functions. Set parameters after confirming the function of each terminal.

**Signal loss detection (Pr. 539 "Modbus-RTU communication check time interval")**

- If a signal loss (communication) is detected between the inverter and the master as a result of a signal loss detection, an inverter communication fault (E.SER) occurs and the inverter trips.
- When the setting is "9999", communication check (signal loss detection) is not made.
- When the setting is "0", reading, etc. of monitors and parameters is possible, though a Communication fault (inverter) (E.SER) occurs instantly when the Network operation mode is switched to.
- A signal loss detection is made when the setting is any of "0.1 s to 999.8 s". To make a signal loss detection, it is necessary to send data from the master within the communication check time interval. (The inverter makes a communication check (clearing of communication check counter) regardless of the station number setting of the data sent from the master).
- The communication check is made from the first communication in the Network operation mode (can be changed by Pr. 551 "PU mode operation command source selection").
- The communication check time by query communication includes a no data time (3.5 bytes). This no data time differs according to the communication speed, so take this time no data time into consideration when setting the communication check time.

**Example** ▽ RS-485 terminal communication, Pr. 539 = "0.1 to 999.8 s"

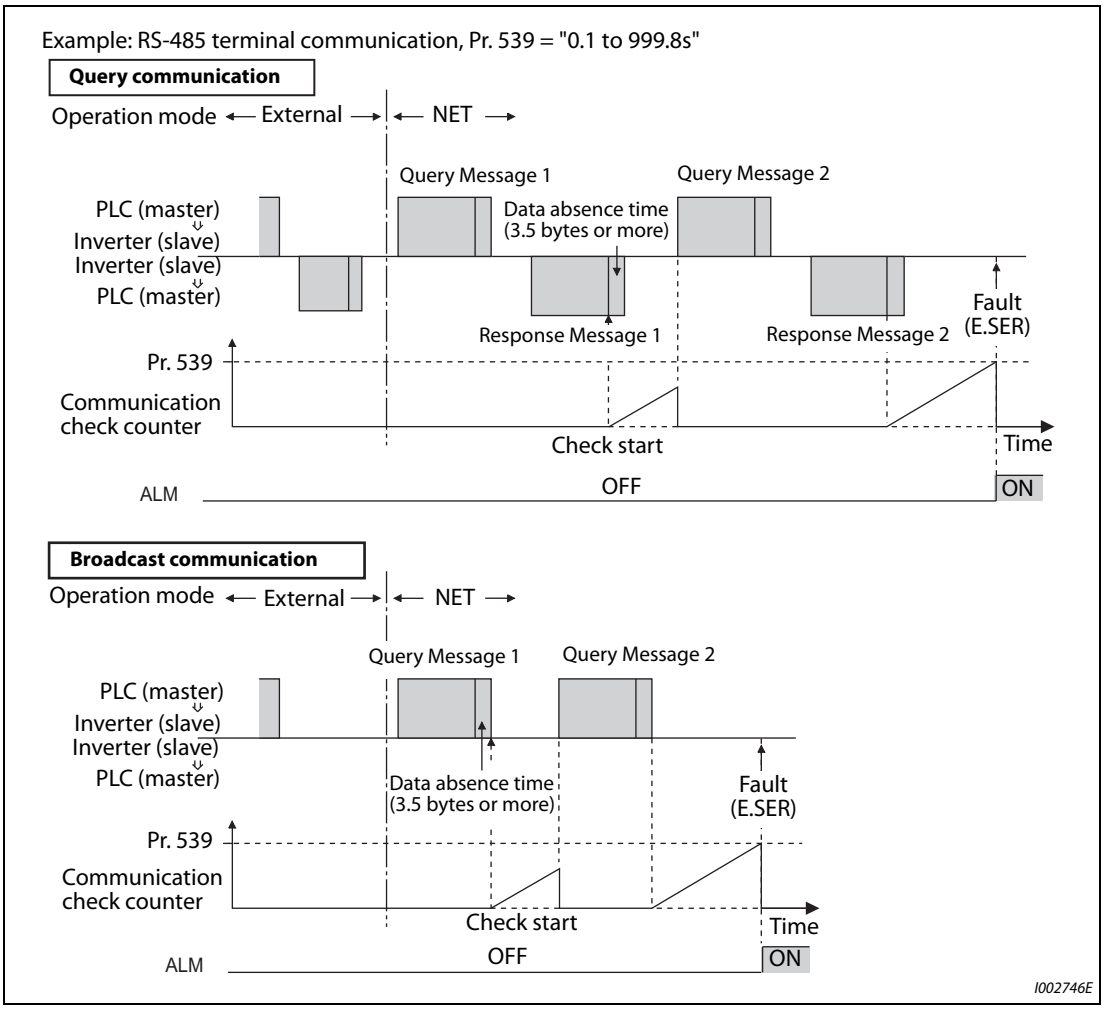


***Fig. 5-307:*** *Signal loss detection*

△

**NOTE** For the RS-485 terminal communication, the operation at a communication error occurrence depends on the Pr. 502 "Stop mode selection at communication error" setting.
(Refer to page 5-583.)

## 5.15.7 USB device communication

A personal computer and an inverter can be connected with a USB cable. Setup of the inverter can be easily performed with FR Configurator2.

The inverter can be connected simply to a personal computer by a USB cable.

| Pr. | Name | Initial value | Setting range | Description |
|---|---|---|---|---|
| 547 ① N040 | USB communication station number | 0 | 0 to 31 | Inverter station number specification |
| 548 ① N041 | USB communication check time interval | 9999 | 0 | USB communication is possible, however the inverter will trip (E.USB) when the mode changes to the PU operation mode. |
| | | | 0.1 to 999.8 s | Set the communication check time interval. If a no-communication state persists for longer than the permissible time, the inverter will trip (E.USB). |
| | | | 9999 | No communication check |

① Changed setting value becomes valid at power ON or the inverter reset.

### USB communication specifications

| Specification | Description |
|---|---|
| Interface | Conforms to USB1.1 (USB2.0 full speed) |
| Transmission speed | 12 Mbps |
| Wiring length | Maximum 5 m |
| Connector | USB mini B connector (receptacle) |
| Power supply | Self-powered |
| Recommended USB cable | MR-J3USBCBL3M (cable length 3 m) |

***Tab. 5-292:*** *USB communication specifications*

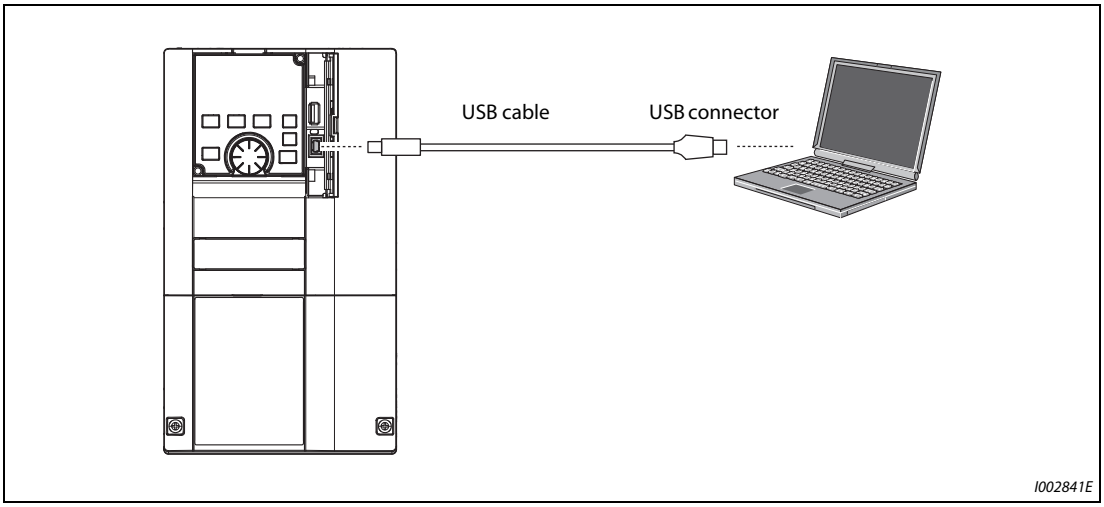


***Fig. 5-308:*** *Connection to the USB connector*

- At the initial setting (Pr. 551 "PU mode operation command source selection" = "9999"), communication with FR Configurator2 can be made in the PU operation mode simply by connecting a USB cable. To fix the command source to the USB connector in the PU operation mode, set "3" to Pr. 551.
- Parameter setting and monitoring can be performed by FR Configurator2. For details, refer to the Instruction Manual of FR Configurator2.

| Parameters referred to | | | |
|---|---|---|---|
| Pr. 551 | PU mode operation command source selection | => | page 5-266 |

## 5.15.8 Automatic connection with GOT

When the automatic connection is enabled in the GOT2000 series, the inverter can communicate with the GOT only setting the station number and connecting the GOT. This eliminates the need for the communication parameter setting.

| Pr. | Name | Initial value | Setting range | Description |
|---|---|---|---|---|
| 117<br>N020 | PU communication station number | 0 | 0 to 31 | Set the inverter station numbers.<br>The inverter station number setting is required when multiple inverters are connected to one GOT (PU connector communication). |
| 331<br>N030 | RS-485 communication station number | 0 | 0 to 31<br>(0 to 247)*1*2 | Set the inverter station numbers.<br>The inverter station number setting is required when multiple inverters are connected to one GOT (RS-485 terminal communication). |

① When Pr. 549 "Protocol selection" = "1" (Modbus-RTU protocol), the setting range is as shown in the parentheses.

② When the set value is outside of the setting range, the initial value is applied.

### Automatic connection system configuration

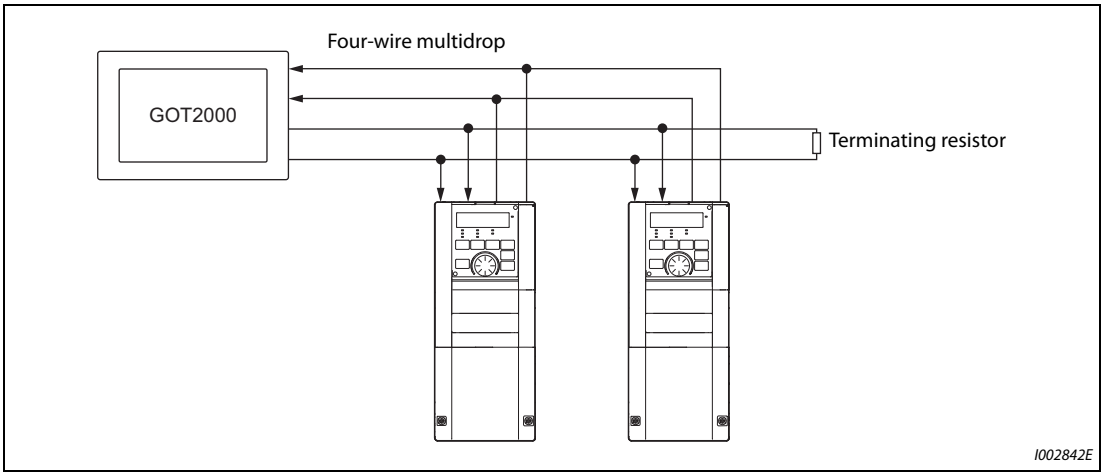


***Fig. 5-309:*** *Automatic connection for GOT2000*

**GOT2000 series automatic recognition**

- When the GOT2000 series is connected, the parameters required for the GOT connection are automatically changed by setting the automatic recognition on the GOT2000 series side.
- Set the station number (Pr. 117 or Pr. 331) of the inverter before the automatic recognition is performed.
- Connect all the stations of inverters with GOT before the automatic recognition is performed. The inverter newly added after automatic recognition is not recognized automatically. (When an inverter is added, perform the initial setting in Pr. 999 "Automatic parameter setting" or set the automatic recognition on the GOT side again.)

| Automatic change item | Automatic change parameter | | Setting value after change |
|---|---|---|---|
| | PU connector connection | RS-485 terminal connection | |
| Communication speed | Pr. 118 | Pr. 332 | Depending on the setting of the connected device on the GOT side. |
| Data length/stop bit | Pr. 119 | Pr. 333 | |
| Parity | Pr. 120 | Pr. 334 | |
| Waiting time setting | Pr. 123 | Pr. 337 | |
| CR/LF selection | Pr. 124 | Pr. 341 | |
| Number of communication retries | Pr. 121 | Pr. 335 | 9999 (fixed) |
| Communication check time interval | Pr. 122 | Pr. 336 | 9999 (fixed) |
| Protocol selection | — (Pr. 549 holds the value before the automatic recognition.) | Pr. 549 | 0 (fixed to Mitsubishi inverter protocol) |

***Tab. 5-293:*** *Automatic parameter change with GOT*

**NOTES**

If the automatic recognition cannot be performed, initial setting in Pr. 999 is required.

For connection to a device other than the GOT2000 series, initial setting in Pr. 999 is required.

For details, refer to the GOT2000 Series Connection Manual (Mitsubishi Product) (SH-081197ENG).

| Parameters referred to | | | |
|---|---|---|---|
| Pr. 999 | Automatic parameter setting | => | page 5-203 |

# 5.16 (G) Control parameters

| Purpose | Parameter to set | | | Refer to page |
|---|---|---|---|---|
| To set the starting torque manually | Manual torque boost | P.G000, P.G010, P.G020 | Pr. 0, Pr. 46, Pr. 112 | 5-629 |
| To set the motor constant | Base frequency, base frequency voltage | P.G001, P.G002, P.G011, P.G021 | Pr. 3, Pr. 19, Pr. 47, Pr. 113 | 5-631 |
| To select the V/F pattern matching the application | Load pattern selection | P.G003 | Pr. 14 | 5-634 |
| To perform energy saving operation | Energy saving operation | P.G030 | Pr. 60 | 5-637 |
| To use a special motor | Adjustable 5 points V/F | P.C100, P.G040 to P.G049 | Pr. 71, Pr. 100 to Pr. 109 | 5-638 |
| To adjust the motor braking torque | DC injection brake, zero speed control, and servo lock, magnetic flux decay output shutoff | P.G100 to P.G103, P.G110 | Pr. 10 to Pr. 12, Pr. 802, Pr. 850 | 5-640 |
| To coast the motor to a stop | Output stop function | P.G105 | Pr. 522 | 5-648 |
| | Selection of motor stop method | P.G106 | Pr. 250 | 5-417 |
| To use the regeneration unit to increase the motor braking torque | Regenerative brake selection | P.E300, P.G107, P.T721 | Pr. 30, Pr. 70, Pr. 599 | 5-652 |
| To operate the inverter with DC power supply | DC feeding mode | P.E300 | Pr. 30 | 5-652 |
| To avoid overvoltage alarm due to regenerative driving by automatic adjustment of the output frequency | Regeneration avoidance function | P.G120 to P.G125 | Pr. 882 to Pr. 886, Pr. 665 | 5-662 |
| To decrease the deceleration time of the motor | Increased magnetic excitation deceleration | P.G130 to P.G132 | Pr. 660 to Pr. 662 | 5-666 |
| To select the control method | Control method selection | P.G200, P.G300 | Pr. 800, Pr. 451 | 5-55 |
| To secure the low-speed torque by compensating the slip of the motor | Slip compensation | P.G203 to P.G205 | Pr. 245 to Pr. 247 | 5-668 |
| To select the torque characteristic | Constant output range torque characteristic selection | P.G210 | Pr. 803 | 5-83, 5-129 |
| To adjust the speed control gain | Speed control gain | P.G211, P.G212 P.G311, P.G312 | Pr. 820, Pr. 821, Pr. 830, Pr. 831 | 5-66 |
| To adjust the torque control gain | Torque control gain | P.G213, P.G214, P.G313, P.G314 | Pr. 824, Pr. 825, Pr. 834, Pr. 835 | 5-141 |
| To stabilizes speed and torque feedback signal | Speed detection filter, torque detection filter | P.G215, P.G216, P.G315, P.G316 | Pr. 823, Pr. 827, Pr. 833, Pr. 837 | 5-180 |
| To changes excitation ratio | Excitation ratio | P.G217 | Pr. 854 | 5-181 |
| To improve the motor trackability for the speed command changes | Speed feed forward control, model adaptive speed control | P.G224, P.G220 to P.G222, P.G223 | Pr. 828, Pr. 877 to Pr. 879, Pr. 881 | 5-106 |
| To make starting torque start-up faster | Torque bias | P.G230 to P.G238 | Pr. 840 to Pr. 848 | 5-110 |
| To make the motor speed constant by the encoder | Encoder feedback control | P.M002, P.A107, P.C140, P.C141, P.G240, P.G241 | Pr. 144, Pr. 285, Pr. 359, Pr. 367 to Pr. 369 | 5-669 |
| To select low-speed range torque characteristics | Low-speed range torque characteristics | P.G250, P.G350 | Pr. 788, Pr. 747 | 5-74 |
| To perform frequency control appropriate for load torque | Droop control | P.G400 to P.G404 | Pr. 286 to Pr. 288, Pr. 994, Pr. 995 | 5-672 |
| To suppress the machine resonance | Speed smoothing control | P.G410, P.G411 | Pr. 653, Pr. 654 | 5-675 |
| | Notch filter | P.G601 to P.G603 | Pr. 1003 to Pr. 1005 | 5-118 |
| To adjust the speed gain for Advanced magnetic flux vector control | Speed control gain | P.G932, P.G942 | Pr. 89, Pr. 569 | 5-66 |

## 5.16.1 Manual torque boost V/F

Voltage drop in the low-frequency range can be compensated, improving reduction of the motor torque in the low-speed range.

- Motor torque in the low-frequency range can be adjusted according to the load, increasing the motor torque at the start up.
- By using the RT signal or X9 signal, it is possible to switch between 3 types of torque boost.

| Pr. | Name | Initial value | Setting range | Description |
|---|---|---|---|---|
| 0<br>G000 | Torque boost | 6% ① | 0 to 30% | Set the output voltage at 0 Hz in %. |
| | | 4% ② | | |
| | | 3% ③ | | |
| | | 2% ④ | | |
| | | 1% ⑤ | | |
| 46<br>G010 | Second torque boost | 9999 | 0 to 30% | Set the torque boost value at when RT signal is ON. |
| | | | 9999 | Without second torque boost |
| 112<br>G020 | Third torque boost | 9999 | 0 to 30% | Set the torque boost value at when X9 signal is ON. |
| | | | 9999 | Without third torque boost |

① Initial value for the FR-A820-00077(0.75K) or lower and FR-A840-00038(0.75K) or lower.

② Initial values for the FR-A820-00105(1.5K) to FR-A820-00250(3.7K), FR-A840-00052(1.5K) to FR-A840-00126(3.7K).

③ Initial values for the FR-A820-00340(5.5K), FR-A820-00490(7.5K), FR-A840-00170(5.5K), FR-A840-00250(7.5K).

④ Initial values for the FR-A820-00630(11K) to FR-A820-03160(55K), FR-A840-00310(11K) to FR-A840-01800(55K).

⑤ Initial value for the FR-A820-03800(75K) or higher and FR-A840-02160(75K) or higher.

### Starting torque adjustment

- Assuming Pr. 19 "Base frequency voltage" is 100%, set the output voltage at 0 Hz to Pr. 0 (Pr. 46, Pr. 112) in percentage.
- Perform the adjustment of the parameter little by little (approximately 0.5%), and confirm the status of the motor each time. The motor may overheat when the value is set too high. Do not use more than 10% as a guideline.

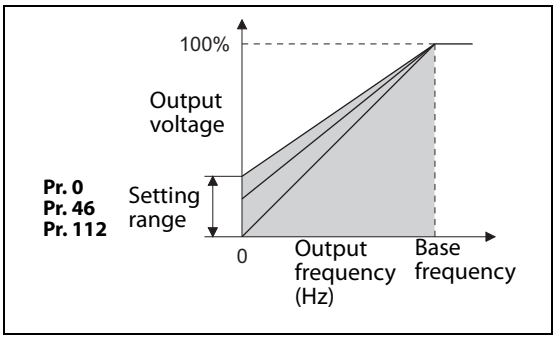


***Fig. 5-310:***
*Relationship between output frequency and output voltage*

**Setting multiple torque boosts (RT signal, X9 signal, Pr. 46, Pr. 112)**

- When changing the torque boost depending on the usage or when using single inverter switching between multiple motors, use the second (third) torque boost.
- Pr. 46 "Second torque boost" will become enabled when the RT signal turns ON.
- Pr. 112 "Third torque boost" will become enabled when X9 signal turns ON. Set "9" in Pr. 178 to Pr. 189 (input terminal function selection) to assign X9 signal function to a terminal.

**NOTES**

The RT (X9) signal acts as the second (third) function selection signal and makes the other second (third) functions valid. (Refer to page 5-415.)

The RT signal is assigned to the terminal RT in the initial status. Set "3" in any of Pr. 178 to Pr. 189 (input terminal function selection) to assign the RT signal to another terminal.

Set a larger value when the distance between the inverter and the motor is long or when there is not enough motor torque in the low-speed range. It may cause overcurrent trip when it is set too large.

Setting for Pr. 0, Pr. 46, and Pr. 112 becomes enabled only when the V/F control is selected.

When the initial value is set in Pr. 0, the Pr. 0 setting is automatically changed by changing the Pr. 71 "Applied motor"setting. (Refer to page 5-421.)

Changing the terminal assignment using Pr. 178 to Pr. 189 (input terminal function selection) may affect the other functions. Set parameters after confirming the function of each terminal.

| Parameters referred to | | | |
|---|---|---|---|
| Pr. 3 | Base frequency | => | page 5-631 |
| Pr. 19 | Base frequency voltage | => | page 5-631 |
| Pr. 71 | Applied motor | => | page 5-421 |
| Pr. 178 to Pr. 182 | (input terminal function selection) | => | page 5-409 |

## 5.16.2 Base frequency, voltage V/F

Use this function to adjust the inverter outputs (voltage, frequency) to match with the motor rating.

| Pr. | Name | Initial value | | Setting range | Description |
|---|---|---|---|---|---|
| | | FM | CA | | |
| 3<br>G001 | Base frequency | 60 Hz | 50 Hz | 0 to 590 Hz | Set the frequency at the rated motor torque.<br>(50 Hz/60 Hz) |
| 19<br>G002 | Base frequency voltage | 9999 | | 0 to 1000 V | Set the base voltage. |
| | | | | 8888 | 95% of the power supply voltage |
| | | | | 9999 | Same as the power supply voltage |
| 47<br>G011 | Second V/F<br>(base frequency) | 9999 | | 0 to 590 Hz | Set the base frequency at the RT signal ON. |
| | | | | 9999 | Second V/F disabled |
| 113<br>G021 | Third V/F (base frequency) | 9999 | | 0 to 590 Hz | Set the base frequency at the X9 signal ON. |
| | | | | 9999 | Third V/F disabled |

### Setting of base frequency (Pr. 3)

- When operating a standard motor, generally set the rated frequency of the motor in Pr. 3 "Base frequency". When the motor operation require switching to the commercial power supply, set the power supply frequency in Pr. 3.
- When the frequency on the motor rating plate is only "50 Hz", make sure to set to "50 Hz". When it is set to "60 Hz", the voltage will drop too much, causing insufficient torque. As a result, the inverter may trip due to overload.
  A caution is required especially in case of Pr. 14 "Load pattern selection" = "1" (variable torque load).
- When using the Mitsubishi constant torque motor, set Pr. 3 to 60 Hz.

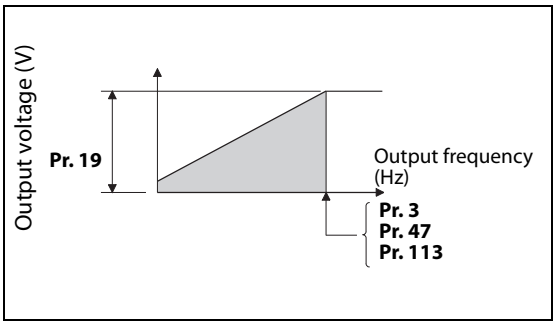


***Fig. 5-311:***
*Output voltage related to the output frequency*

I002749E

### Setting multiple base frequencies (Pr. 47, Pr. 113)

- To change the base frequency when using single inverter switching between multiple motors, use Pr. 47 "Second V/F (base frequency)" and Pr. 113 "Third V/F (base frequency)".
- Pr. 47 will become enabled when the RT signal turns ON and Pr. 113 when the X9 signal turns ON. To input the X9 signal, set "9" in any of Pr. 178 to Pr. 189 (input terminal function selection) to assign the function to a terminal.

**NOTES**

The RT (X9) signal acts as the second (third) function selection signal and makes the other second (third) functions valid. (Refer to page 5-415.)

The RT signal is assigned to the terminal RT in the initial status. It is also possible to assign the RT signal to other terminal by setting "3" on Pr. 178 to Pr. 189 (input terminal function selection).

**Setting of base frequency voltage (Pr. 19)**

- For Pr. 19 "Base frequency voltage", set the base voltage (rated motor voltage, etc.).
- When it is set lower than the power supply voltage, maximum output voltage of the inverter will be the voltage set in Pr. 19.
- Pr. 19 can be used in following cases.
  - Regenerative driving (continuous regeneration, etc.) is performed often
    Output voltage will get higher than the specification during the regenerative driving, which may cause overcurrent trip (E.OC[]) by the increase in motor current.
  - When the fluctuation of power supply voltage is high
    When the power supply voltage exceeds the rated voltage of the motor, fluctuation of rotation speed or overheating of motor may occur due to excessive torque or increase in motor current.

- When operating vector control dedicated motor (SF-V5RU, SF-V5RU1, SF-V5RU3, SF-V5RU4, SF-VR) with V/F control, perform following settings.

| Motor model | Pr. 19 setting | Pr. 3 setting |
|---|---|---|
| SF-V5RU-3.7kW or lower | 170 V | 50 Hz |
| SF-V5RU-5.5kW or lower | 160 V | |
| SF-V5RUH-3.7kW or lower | 340 V | |
| SF-V5RUH-5.5kW or lower | 320 V | |
| SF-V5RU1-30kW or lower | 160 V | 33.33 Hz |
| SF-V5RU1-37kW | 170 V | |
| SF-V5RU3-22kW or lower | 160 V | |
| SF-V5RU3-30kW | 170 V | |
| SF-V5RU4-3.7kW and 7.5kW | 150 V | 16.67 Hz |
| SF-V5RU4 and motors other than described above | 160 V | |
| SF-VR | 160 V | 50 Hz |
| SF-VRH | 320 V | |

***Tab. 5-294:*** *Setting of base frequency voltage*

**NOTES**

When the operation becomes not possible due to failure in encoder, etc., at the time of vector control, set Pr. 80 "Motor capacity" or Pr. 81 "Number of motor poles" = "9999" to perform V/F control.

When the Advanced magnetic flux vector control, Real sensorless vector control, vector control, or PM sensorless vector control is selected, Pr. 3, Pr. 47, Pr. 113, and Pr. 19 will become disabled, and Pr. 83 and Pr. 84 will become enabled.
However, S-pattern curve with Pr. 29 "Acceleration/deceleration pattern selection" = "1" (S-pattern acceleration/deceleration A) will make Pr. 3 or Pr. 47 and Pr. 113 enabled. (S-pattern curve at the time of the PM sensorless vector control is the rated frequency of the motor.)

When Pr. 71 "Applied motor" = "2" (adjustable 5 points V/F), setting for Pr. 47 and Pr. 113 will become disabled. Also, Pr. 19 cannot be set to "8888" or "9999".

Changing the terminal assignment using Pr. 178 to Pr. 189 (input terminal function selection) may affect the other functions. Set parameters after confirming the function of each terminal.

| Parameters referred to | | | |
|---|---|---|---|
| Pr. 14 | Load pattern selection | => | page 5-634 |
| Pr. 29 | Acceleration/deceleration pattern selection | => | page 5-232 |
| Pr. 71 | Applied motor | => | page 5-421 |
| Pr. 83 | Rated motor voltage | => | page 5-66 |
| Pr. 84 | Rated motor frequency | => | page 5-66 |
| Pr. 178 to Pr. 189 | (input terminal function selection) | => | page 5-409 |

## 5.16.3 Load pattern selection V/F

Optimal output characteristics (V/F characteristics) for application or load characteristics can be selected.

| Pr. | Name | Initial value | Setting range | Description |
|---|---|---|---|---|
| 14<br>G003 | Load pattern selection | 0 | 0 | For constant-torque load |
| | | | 1 | For variable-torque load |
| | | | 2 | For constant-torque lift<br>(boost at reverse rotation 0%) |
| | | | 3 | For constant-torque lift<br>(boost at forward rotation 0%) |
| | | | 4 | RT signal ON.....for constant-torque load<br>RT signal OFF .....for constant-torque lift, boost at reverse rotation 0% |
| | | | 5 | RT signal ON.....for constant-torque load<br>RT signal OFF .....for constant-torque lift, boost at forward rotation 0% |

**Application for constant-torque load (Pr. 14 = "0", initial value)**

- The output voltage will change linearly against the output frequency at the base frequency or lower. (1.75th-power curve for FR-A820-01870(37K) or higher, and FR-A840-00930(37K) or higher)
- Set this parameter when driving a load that has constant load torque even when the rotation speed is changed, such as conveyor, dolly, or roll drive.

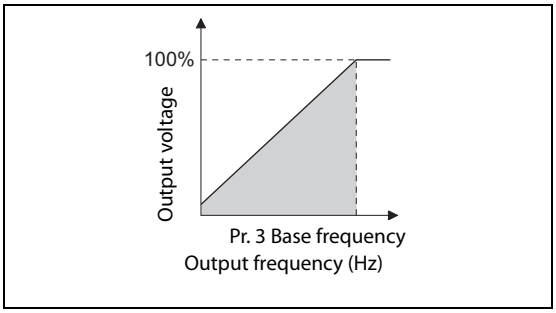


***Fig. 5-312:***
*Constant-torque load*

**NOTE**

Select for constant-torque load (setting value "0") even for fan and pump in following cases.
- When accelerating a blower with large moment of inertia (J) in a short period of time.
- When it is a constant-torque load such as rotary pump or gear pump.
- When the load torque increases in low speed such as screw pump.

**Application for variable-torque load (Pr. 14 = "1")**

- The output voltage will change in square curve against the output frequency at the base frequency or lower.
- Set this parameter when driving a load with load torque change proportionally against the square of the rotation speed, such as fan and pump.

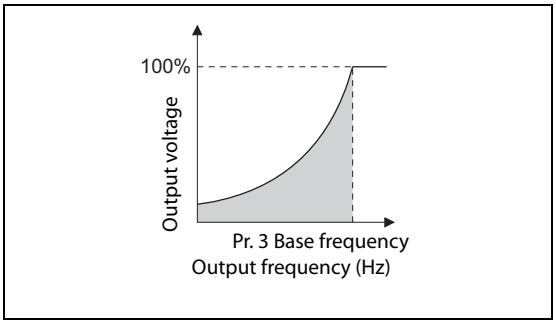


***Fig. 5-313:*** *Variable-torque load*

**Vertical lift load applications (Pr. 14 = "2, 3")**

- Set "2" when a vertical lift load is fixed as power driving load at forward rotation and regenerative load at reverse rotation.
- Pr. 0 "Torque boost" is valid during forward rotation, and torque boost is automatically changed to "0%" during reverse rotation.
- Set "3" for an elevated load that is in the driving mode during reverse rotation and in the regenerative load mode during forward rotation according to the load weight, e.g. counterweight system.

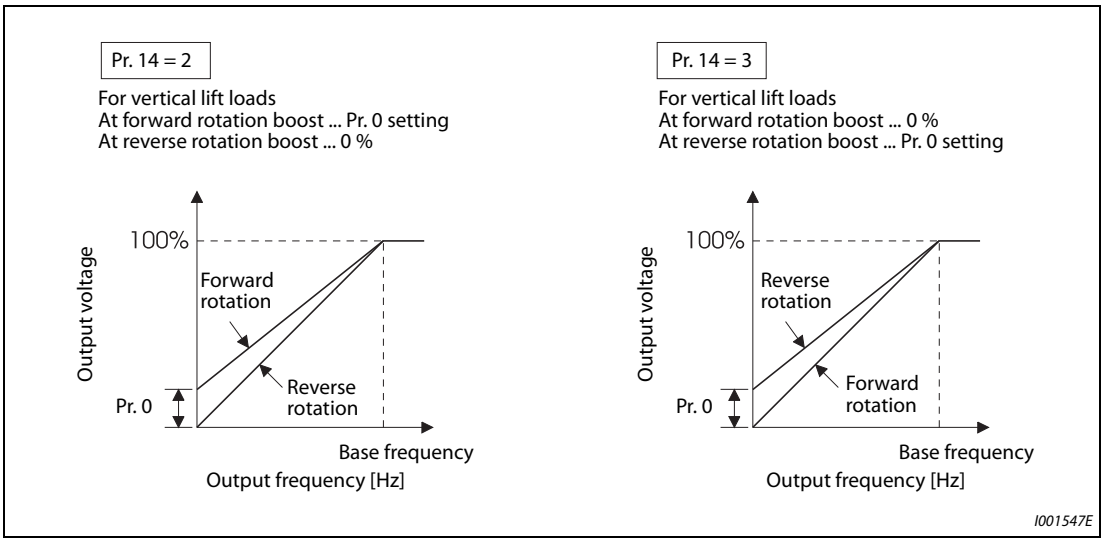


***Fig. 5-314:*** *Characteristic with manual torque boost*

**NOTE**

When torque is continuously regenerated as vertical lift load, it is effective to set the rated voltage in Pr. 19 "Base frequency voltage" to prevent trip due to current at regeneration.

**Switching applied load selection with a terminal (Pr. 14 = "4, 5")**

- It is possible to switch between for constant-torque load and for lift with RT signal or X17 signal.
- To input the X17 signal, set "17" in any of Pr. 178 to Pr. 189 (input terminal function selection) to assign the function.
- Switching with RT signal will become disabled when X17 signal is assigned.

| Pr. 14 setting | RT (X17) signal | Output characteristics |
|---|---|---|
| 4 | ON | For constant-torque load (same as setting value "0") |
| | OFF | For lift, boost at reverse rotation 0% (same as setting value "2") |
| 5 | ON | For constant-torque load (same as setting value "0") |
| | OFF | For lift, boost at forward rotation 0% (same as setting value "3") |

***Tab. 5-295:*** *Load selection by terminal*

**NOTES**

The RT signal is assigned to the terminal RT in the initial status. Set "3" in any of Pr. 178 to Pr. 189 (input terminal function selection) to assign the RT signal to another terminal.

Changing the terminal assignment using Pr. 178 to Pr. 189 may affect other functions. Set parameters after confirming the function of each terminal.

Pr. 14 will become enabled at the time of V/F control.

Other second functions will become enabled when the RT signal is ON.

| Parameters referred to | | | |
|---|---|---|---|
| Pr. 0 | Torque boost | => | page 5-629 |
| Pr. 3 | Base frequency | => | page 5-631 |
| Pr. 178 to Pr. 182 | (input terminal function selection) | => | page 5-409 |

## 5.16.4 Energy saving control V/F

Inverter will perform energy saving control automatically even when the detailed parameter settings are made.

It is appropriate for applications such as fan and pump.

| Pr. | Name | Initial value | Setting range | Description |
|---|---|---|---|---|
| 60<br>G030 | Energy saving control selection | 0 | 0 | Normal operation |
| | | | 4 | Energy saving operation |
| | | | 9 | Optimum excitation control |

**Energy saving operation (setting "4")**

- Setting Pr. 60 = "4" will select the energy saving operation.
- With the energy saving operation, the inverter will automatically control the output voltage so the inverter output power during the constant-speed operation will become minimal.
- Energy saving operation will be enabled under V/F control.

**Optimum excitation control (setting "9")**

- Setting Pr. 60 = "9" will select the Optimum excitation control.
- The Optimum excitation control is a control method to decide the output voltage by controlling the excitation current so the efficiency of the motor is maximized.
- Optimum excitation control will be enabled under V/F control and Advanced magnetic flux vector control.

**NOTES**

An energy saving effect is not expected with the energy saving operation mode for applications with high load torque or with the equipment with frequent acceleration and deceleration.

An energy saving effect is not expected with the Optimum excitation control mode when the motor capacity is extremely small compared with the inverter capacity or when multiple motors are connected to a single inverter.

When the energy saving operation mode or Optimum excitation control mode is selected, the deceleration time may become longer than setting value. Also, it may cause overvoltage more often compared to constant-torque load characteristics, so set the deceleration time longer.

When the motor becomes unstable during the acceleration, set the acceleration time longer.

Output current may increase slightly with the energy saving operation mode or the Optimum excitation control mode since the output voltage is controlled.

## 5.16.5 Adjustable 5 points V/F V/F

By setting a desired V/F characteristic from the start up to the base frequency or base voltage with the V/F control (frequency voltage/frequency), a dedicated V/F pattern can be generated.

Optimal V/F pattern matching the torque characteristics of the facility can be set.

| Pr. | Name | Initial value | Setting range | Description |
|---|---|---|---|---|
| 71<br>C100 | Applied motor | 0 | 2 | Standard motor (such as SF-JR)<br>Adjustable 5 points V/F |
| | | | Others | Refer to page 5-421. |
| 100<br>G040 | V/F1(first frequency) | 9999 | 0 to 590 Hz, 9999 | Set each point of the V/F pattern (frequency, voltage).<br>9999: Do not set V/F |
| 101<br>G041 | V/F1(first frequency voltage) | 0 V | 0 to 1000 V | |
| 102<br>G042 | V/F2(second frequency) | 9999 | 0 to 590 Hz, 9999 | |
| 103<br>G043 | V/F2(second frequency voltage) | 0 V | 0 to 1000 V | |
| 104<br>G044 | V/F3(third frequency) | 9999 | 0 to 590 Hz, 9999 | |
| 105<br>G045 | V/F3(third frequency voltage) | 0 V | 0 to 1000 V | |
| 106<br>G046 | V/F4(fourth frequency) | 9999 | 0 to 590 Hz, 9999 | |
| 107<br>G047 | V/F4(fourth frequency voltage) | 0 V | 0 to 1000 V | |
| 108<br>G048 | V/F5(fifth frequency) | 9999 | 0 to 590 Hz, 9999 | |
| 109<br>G049 | V/F5(fifth frequency voltage) | 0 V | 0 to 1000 V | |

- By setting the V/F1 (first frequency voltage/first frequency) to V/F5 parameters in advance, a desired V/F characteristic can be obtained.
- For an example, with the equipment with large static friction factor and small dynamic friction factor, large torque is required only at the start up, so a V/F pattern that will raise the voltage only at the low-speed range is set.

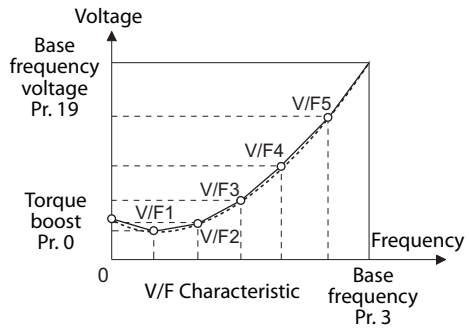


***Fig. 5-315:*** *V/F characteristic*

- Setting procedure

  ① Set the rated motor voltage in Pr. 19 "Base frequency voltage".

  ② Set Pr. 71 "Applied motor" = "2" (adjustable 5 points V/F).

  ③ Set frequency and voltage to be set in Pr. 100 to Pr. 109.

**CAUTION:**

***Make sure to set this parameter correctly according to the motor used. Incorrect setting may cause the motor to overheat and burn.***

**NOTES**

Adjustable 5 points V/F will become enabled at the time of V/F control.
At the time of Pr. 19 Base frequency voltage = "8888, 9999", setting of Pr. 71 = "2" cannot be made.
When setting Pr. 71 = "2", set the rated motor voltage in Pr. 19.

Read only error (Er. 1) is generated when the frequency value for each point is same.

Set each point for Pr. 100 to Pr. 109 (frequency, voltage) within the range of Pr. 3 "Base frequency" and Pr. 19 "Base frequency voltage".

When Pr. 71 = "2", Pr. 47 Second V/F (base frequency) and Pr. 113 Third V/F (base frequency) will not function.

When Pr. 71 = "2", electronic thermal O/L relay will make calculations assuming a standard motor.

By simultaneously using Pr. 60 "Energy saving control selection" and the adjustable 5 points V/F, further energy saving effect is expected.

The Pr. 0 "Torque boost" and Pr. 12 "DC injection brake operation voltage" settings are automatically changed according to the Pr. 71 setting. (Refer to page 5-425.)

| Parameters referred to | | | |
|---|---|---|---|
| Pr. 0 | Torque boost | => | page 5-629 |
| Pr. 3 | Base frequency | => | page 5-631 |
| Pr. 19 | Base frequency voltage | => | page 5-631 |
| Pr. 12 | DC injection brake operation voltage | => | page 5-640 |
| Pr. 47 | Second V/F (base frequency) | => | page 5-638 |
| Pr. 113 | Third V/F (base frequency) | => | page 5-638 |
| Pr. 60 | Energy saving control selection | => | page 5-637 |
| Pr. 71 | Applied motor | => | page 5-421 |
| Pr. 450 | Second applied motor | => | page 5-421 |

## 5.16.6 DC injection brake, zero speed control, and servo lock

- Timing to stop or braking torque can be adjusted by applying DC injection brake at the time of stopping motor.
- Zero speed control can also be selected at the time of the Real sensorless vector control, and zero speed control and servo lock can be selected at the time of vector control or PM sensorless vector control.
- DC injection brake is preventing the motor shaft to turn by applying DC voltage to the motor, and the other hand, zero speed control is using vector control to maintain 0 r/min. Either way, the motor shaft will not return to its original position when it is rotated due to external force.
- Servo lock will maintain the position of the motor shaft. When a motor shaft is rotated by external force, it goes back to the original position.
- Select the magnetic flux decay output shutoff function to decay the magnetic flux before shutting off the output at a stop.

| Pr. | Name | Initial value | Setting range | Description |
|---|---|---|---|---|
| 10<br>G100 | DC injection brake operation frequency | 3 Hz | 0 to 120 Hz | Set the operation frequency for the DC injection brake (zero speed control and servo lock). |
| | | | 9999 | Operate at Pr. 13 or lower |
| 11<br>G101 | DC injection brake operation time | 0.5 s | 0 | Without DC injection brake (zero speed control and servo lock) |
| | | | 0.1 to 10 s | Set the operation time for the DC injection brake (zero speed control and servo lock). |
| | | | 8888 | Operate with X13 signal ON |
| 12<br>G110 | DC injection brake operation voltage | 4% ① | 0 to 30% | Set the DC injection brake voltage (torque). When set to "0", there will be without DC injection brake. |
| | | 2% ② | | |
| | | 1% ③ | | |
| 802<br>G102 | Pre-excitation selection | 0 | 0 | Zero speed control |
| | | | 1 | Servo lock |
| 850<br>G103 | Brake operation selection | 0 | 0 | DC injection brake operation |
| | | | 1 | Zero speed control (Real sensorless vector control) |
| | | | 2 | Magnetic flux decay output shutoff (Real sensorless vector control) |

① Initial value for the FR-A820-00490(7.5K) or lower and FR-A840-00250(7.5K) or lower.

② Initial values for the FR-A820-00630(11K) to FR-A820-03160(55K), FR-A840-00310(11K) to FR-A840-01800(55K).

③ Initial value for the FR-A820-03800(75K) or higher and FR-A840-02160(75K) or higher.

**Setting of operating frequency (Pr. 10)**

- By setting the frequency to operate the DC injection brake (zero speed control and servo lock) to Pr. 10 "DC injection brake operation frequency", the DC injection brake (zero speed control and servo lock) will operate when it reaches this frequency at the time of deceleration.
- When Pr. 10 = "9999", DC injection brake (zero speed control, servo lock) will start when the frequency reaches Pr. 13 "Starting frequency".
- The DC injection brake operation frequency depends on the stopping method.

| Stopping method | Parameter setting | DC injection brake operation frequency |
|---|---|---|
| Press the STOP key on the operation panel<br>Turning OFF of the STF/STR signal | 0.5 Hz or higher in Pr. 10 | Pr. 10 setting |
| | Lower than 0.5 Hz in Pr. 10, and 0.5 Hz or higher in Pr. 13 | 0.5Hz |
| | Lower than 0.5 Hz in both Pr. 10 and Pr. 13 | Pr. 10 or Pr. 13 setting, whichever larger |
| Set the frequency to 0 Hz | — | Pr. 13 setting or 0.5 Hz, whichever larger |

***Tab. 5-296:*** *DC injection brake operation frequency and stopping method*

- DC injection brake operation frequency will be fixed to 0 Hz at the time of PM sensorless vector control (low-speed range high-torque mode disabled).

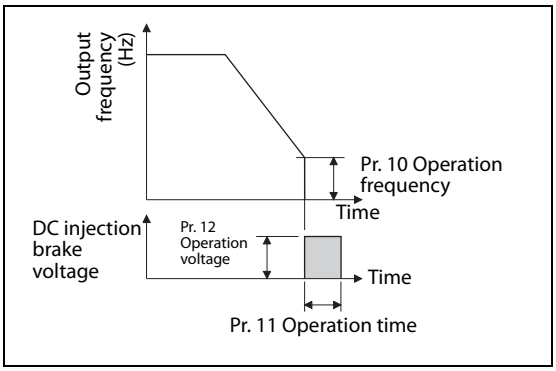


***Fig. 5-316:***
*When Pr. 11 is set to a value between 0.1 and 10s*

**NOTES**

When executing pre-excitation (zero speed control) at the time of Real sensorless vector control, set Pr. 10 "DC injection brake operation frequency" to 0.5 Hz or lower since it may cause motor vibration, etc., at the time of deceleration stop.

Initial value of Pr. 10 will automatically switch to 0.5 Hz at the time of vector control.

**Setting of operation time (X13 signal, Pr. 11)**

- Set the time applying the DC injection brake (zero speed control and servo lock) to Pr. 11 "DC injection brake operation time".
- When the motor does not stop due to large load moment (J), increasing the setting produces an effect.
- When Pr. 11 = "0 s", DC injection brake (zero speed control and servo lock) will not operate. (The motor will coast to stop.)
- When Pr. 11 = "8888", DC injection brake (zero speed control and servo lock) will operate when the X13 signal is turned ON. DC injection brake will operate when the X13 signal is turned ON even while operating.
- For the X13 signal input, set "13" in any of Pr. 178 to Pr. 189 to assign the function.

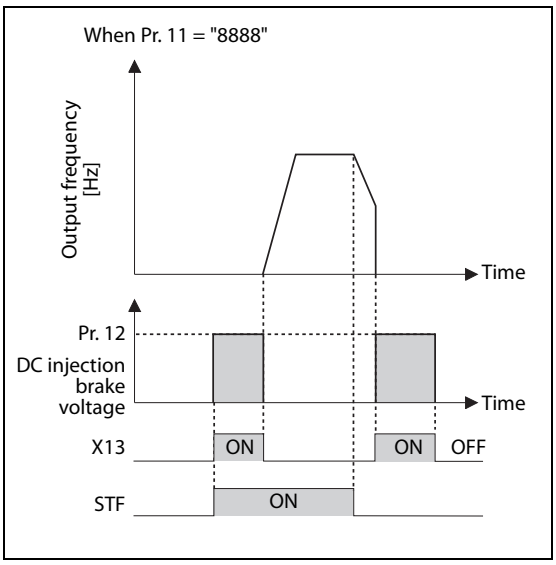


***Fig. 5-317:***
*When Pr. 11 is set to "8888"*

I001559E

**NOTES**

Under Real sensorless vector control, when the X13 signal turns ON while Pr. 11 = "8888", the zero speed control is activated regardless of the Pr. 850 "Brake operation selection" setting.

At the time of vector control or PM sensorless vector control, the zero speed control or the servo lock will operate depending of the setting of Pr. 802.

The X13 signal is disabled during PM sensorless vector control.

**Setting of operation voltage (torque) (Pr. 12)**

- Pr. 12 "DC injection brake operation voltage" will set the percent against the power supply voltage. (Not used at the time of zero speed control or servo lock)
- DC injection brake will not operate with setting of Pr. 12 = "0%". (The motor will coast to stop.)

**NOTES**

When the initial value is set in Pr. 12, the setting corresponding to the motor is set according to the Pr. 71 "Applied motor" setting. (Refer to page 5-425.)
However, when an energy saving motor (SF-HR or SF-HRCA) is used, change the Pr. 12 setting as shown below.

| Inverter | Pr. 12 setting |
|---|---|
| FR-A820-00250(3.7K) or lower<br>FR-A840-00126(3.7K) or lower | 4% |
| FR-A820-00340(5.5K), FR-A820-00490(7.5K)<br>FR-A840-00170(5.5K), FR-A840-00250(7.5K) | 3% |
| FR-A820-00630(11K) to FR-A820-01250(22K), FR-A820-01870(37K) or higher<br>FR-A840-00310(11K) to FR-A840-00620(22K), FR-A840-00930(37K) or higher | 2% |
| FR-A820-01540(30K)<br>FR-A840-00770(30K) | 1.5% |

Even if the setting value of Pr. 12 is made larger, braking torque will be limited so the output current will be within the rated current of the inverter.

**Braking operation selection at the time of Real sensorless vector control (Pr. 850 = "0. 1")**

The braking operation at the time of the Real sensorless vector control can be selected between the DC injection brake (initial value) or the Zero speed control.
By setting Pr. 850 "Brake operation selection" = "1", zero speed control will be performed under the frequency set in Pr. 10 "DC injection brake operation frequency".

**NOTES**

Under Real sensorless vector control, when the X13 signal turns ON while Pr. 11 = "8888", the zero speed control is activated regardless of the Pr. 850 setting.

When restarting from brake operation at the time of Real sensorless vector control, set Pr. 850 = "1" (zero speed control). In case of setting value "0" (DC injection brake), it may take approximately 2 s from the time the start up command is input until it actually is output.

**Magnetic flux decay output shutoff and magnetic flux decay output shutoff signal (X74 signal, Pr. 850 = "2")**

- The failure of inverter or increased error in motor may occur due to effect of the motor residual magnetic flux at the time when the inverter output is shut off when frequent start and stop (inching operation) is repeated at the time of Real sensorless vector control. If this is the case, set Pr. 850 = "2" (magnetic flux decay output shutoff) or turn ON the magnetic flux decay output shutoff (X74) signal to decay the magnetic flux at a stop, and then shut off the output.
- With Pr. 850 = "2", deceleration starts at turning OFF of the start command, and the magnetic flux decay output shutoff is activated when the estimated speed becomes lower than Pr. 10 "DC injection brake operation frequency".
- With the brake sequence function is set enabled, the magnetic flux decay output shutoff is activated when the frequency becomes lower than 0.5 Hz or the Pr. 13 "Starting frequency" setting, whichever smaller, during deceleration.
- Inverter output voltage shutoff timing when Pr. 850 = "2"

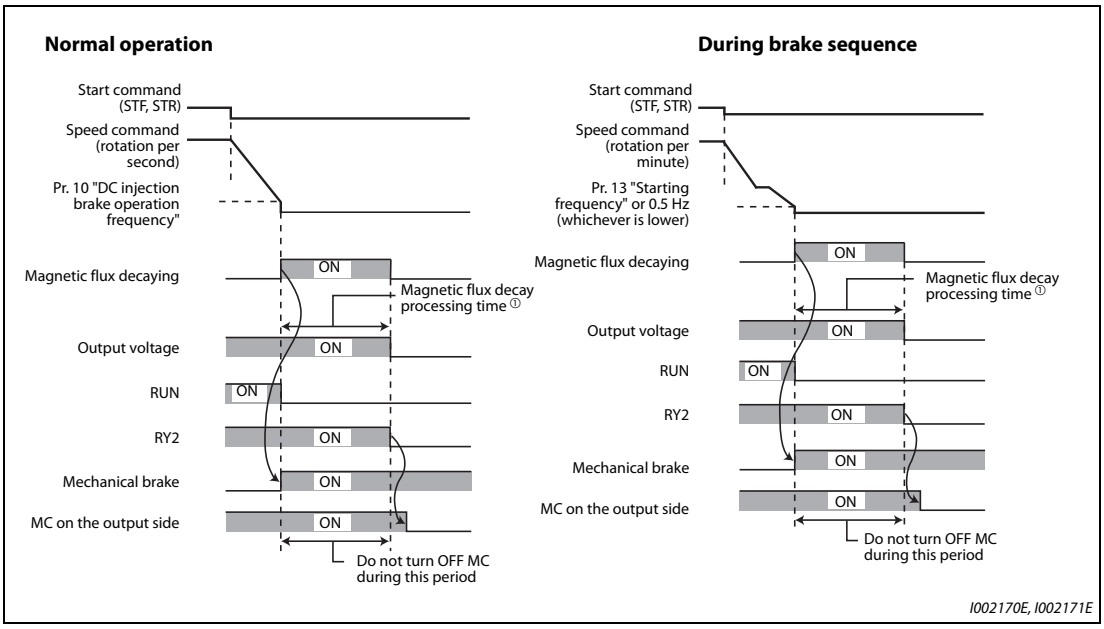


***Fig. 5-318:*** *Inverter output voltage shutoff timing during normal operation and during brake sequence*

① Maximum time for the magnetic flux decay operation

- Regardless of the Pr. 850 setting, the magnetic flux decay output shutoff will operate immediately when the Magnetic flux decay output shutoff signal (X74) is turned ON. For the X74 signal, set "74" in any of Pr. 178 to Pr. 189 (input terminal function selection) to assign the function.

- Inverter output shutoff timing with X74 signal

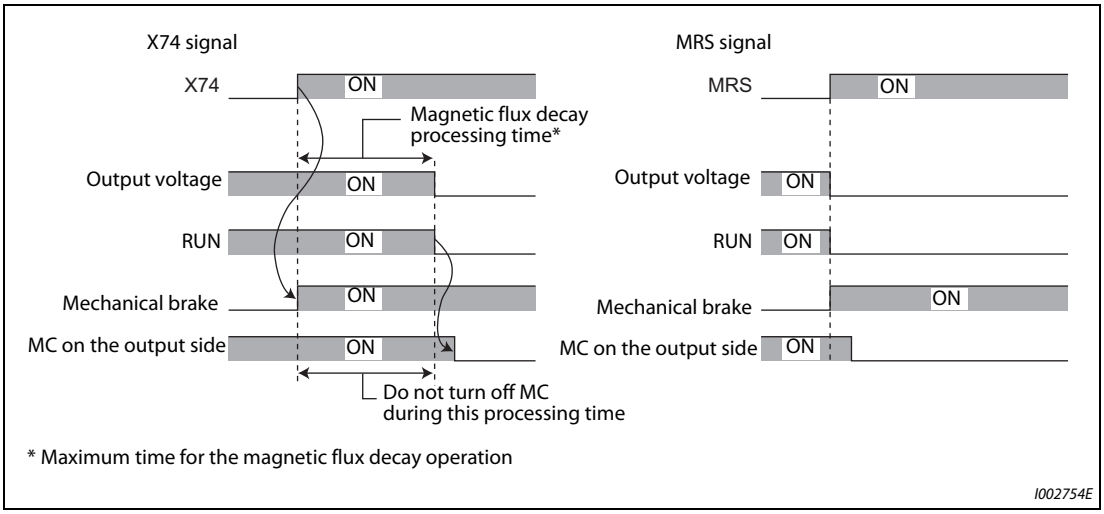


***Fig. 5-319:*** *Inverter output shutoff timing with X74 signal*

- Since the torque will decrease at the time of magnetic flux decay output shutoff, set up so the mechanical brake will operate.
- Magnetic flux decay output shutoff will be canceled at the time of restart and when the Pre-excitation/servo ON(LX) signal/External DC injection brake operation start (X13) signal is turned ON.
- When the MC is installed on the inverter output side, set up so the MC is released after the magnetic flux decay operation time (see below) has passed.

| **Motor capacity (Pr. 80 setting value)** | **2.2 kW or lower** | **3.7 kW to 11 kW** | **15 kW to 30 kW** | **37 kW to 55 kW** | **75 kW or higher** |
|---|---|---|---|---|---|
| Magnetic flux decay process time | 250 ms | 500 ms | 800 ms | 900 ms | 1100 ms |

***Tab. 5-297:*** *Magnetic flux decay operation time*

**NOTES**

When operating in anything other than the Real sensorless vector control, the inverter will immediately shutoff the output when the X74 signal is turned ON.

Even at the time of Real sensorless vector control, the inverter will immediately shutoff the output when the X74 signal is turned ON during the automatic restart after instantaneous power failure and online auto tuning during the start up.

When other output shutoff trigger (inverter fault, turning ON the MRS signal, etc.) occurs during the magnetic flux decay operation, the magnetic flux operation is terminated, and the output is shut off immediately.

Unlike the MRS signal, voltage is output during the magnetic flux decay output shutoff operation, so take caution on electric shocks.

When the release timing of the mechanical brake is too fast, the motor shaft may be rotated by dropping or external force. When the release timing is too late, the overcurrent prevention operation or electronic thermal O/L relay may operate, so perform release of the mechanical brake matching the equipment utilizing the output frequency detection (FU) signal and output current detection (Y12) signal.

Changing the terminal assignment using Pr. 178 to Pr. 189 (input terminal function selection) may affect the other functions. Set parameters after confirming the function of each terminal.

**Braking operation selection for vector control, PM sensorless vector control (Pr. 802)**

- Select the braking operation when the pre-excitation is performed with Pr. 802 "Pre-excitation selection" from either zero speed control or servo lock.

| Pr. 802 setting | Pre-excitation | Description |
|---|---|---|
| 0<br>(initial value) | Zero speed control | It will try to maintain 0 r/min so the motor shaft will not rotate even when a load is applied. However, it will not return to its original position when the shaft moves due to external force.<br>It will not perform position control, but operate only with the speed control. |
| 1 | Servo lock | It will try to maintain the position of the motor shaft even if a load is applied. When the shaft moves due to external force, it will return to its original position after the external force is removed.<br>To perform the position control, this loop gain can be adjusted with Pr. 422 "Position control gain". |

***Tab. 5-298:*** *Selection of pre-excitation*

- The relation between the DC injection brake operation and pre-excitation operation is as follows.

| Control method | Control mode | Pr. 802 | Pr. 850 | Deceleration stop | LX-ON | X13-ON (Pr. 11 = "8888") |
|---|---|---|---|---|---|---|
| V/F control | — | — | — | DC injection brake | — | DC injection brake |
| Advanced magnetic flux vector control | — | — | — | DC injection brake | — | DC injection brake |
| Real sensorless vector control | Speed | — | 0 | DC injection brake | Zero speed | Zero speed |
| | | — | 1 | Zero speed | | |
| | | — | 2 | Magnetic flux decay output shutoff | Zero speed | Zero speed |
| | Torque | — | 0 | DC injection brake | Zero speed | Zero speed |
| | | — | 1 | Zero speed | | |
| | | — | 2 | Magnetic flux decay output shutoff | Zero speed | Zero speed |
| Vector control | Speed | 0 | — | Zero speed | Zero speed | Zero speed |
| | | 1 | — | Servo lock | Servo lock | Servo lock |
| | Torque | — | — | Zero speed | Zero speed | Zero speed |
| | Position | — | — | — | Servo lock | — |
| PM sensorless vector control, low-speed range high-torque mode disabled | Speed | — | — | DC injection brake | — | — |
| PM sensorless vector control, low-speed range high-torque mode enabled | Speed | 0 | — | Zero speed | Zero speed | — |
| | | 1 | — | Servo lock | Servo lock | — |
| | Position | — | — | — | Servo lock | — |

***Tab. 5-299:*** *The relation between the DC injection brake operation and pre-excitation*

**Pre-excitation signal (LX signal)**

- When the Pre-excitation/servo ON (LX) signal is turned ON at the time of Real sensorless vector control, vector control, or PM sensorless vector control, pre-excitation (zero speed control, servo lock) will be ON while stopped.
- To input the LX signal, set "23" in any of Pr. 178 to Pr. 189 (input terminal function selection) to assign the function.

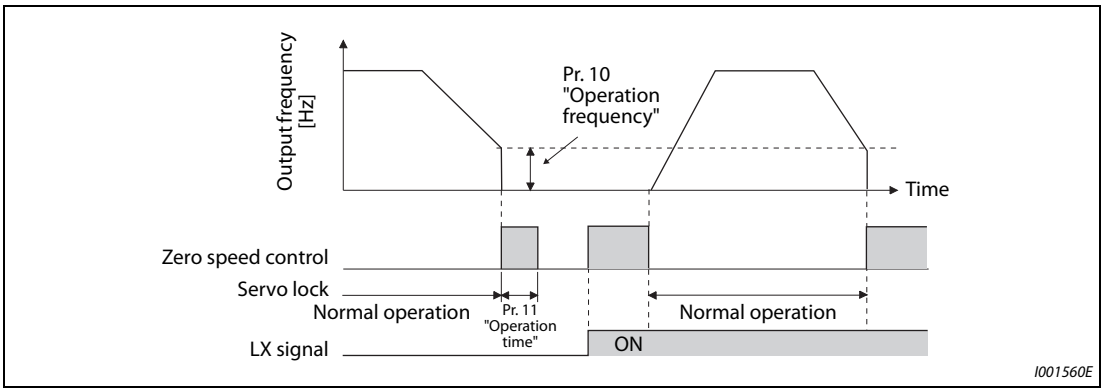


***Fig. 5-320:*** *Selection of pre-excitation using an external signal*

**NOTES**

Changing the terminal assignment using Pr. 178 to Pr. 189 (input terminal function selection) may affect the other functions. Set parameters after confirming the function of each terminal.

Performing pre-excitation (LX signal and X13 signal) under torque control (Real sensorless vector control) may start the motor running at a low speed even when the start command (STF or STR) is not input. The motor may run also at a low speed when the speed limit value = 0 with a start command input. It must be confirmed that the motor running will not cause any safety problem before performing pre-excitation.

At the time of pre-excitation operation, the FWD/REV on the operation panel will not light up, but voltage is applied to the motor, so take caution.

When offline auto tuning (Pr. 96 "Auto tuning setting/status" = "1, 11, 101") is executed at the time of pre-excitation operation, pre-excitation is disabled.

**CAUTION:**

***Do not set Pr. 11 to "0, 8888" and Pr. 12 to "0" at the time of orientation operation. The motor may not stop properly.***

***Install a mechanical brake to make an emergency stop or to stay stopped for a long time. After the machine comes to a full stop and the motor is fixed by the mechanical brake, turn OFF the LX signal (pre-excitation).***

| Parameters referred to | | | |
|---|---|---|---|
| Pr. 13 | Starting frequency | => | page 5-243, page 5-245 |
| Pr. 71 | Applied motor | => | page 5-421 |
| Pr. 80 | Motor capacity | => | page 5-66 |
| Pr. 178 to Pr. 182 | (input terminal function selection) | => | page 5-409 |
| Pr. 422 | Position control gain | => | page 5-175 |

## 5.16.7 Output stop function

The motor coasts to a stop (inverter output shutoff) when inverter output frequency falls to Pr. 522 setting or lower.

| Pr. | Name | Initial value | Setting range | Description |
|---|---|---|---|---|
| 522<br>G105 | Output stop frequency | 9999 | 0 to 590 Hz | Set the frequency to start coasting to a stop (output shutoff). |
| | | | 9999 | No function |

- When both of the frequency setting signal and output frequency falls to the frequency set in Pr. 522 or lower, the inverter stops the output and the motor coasts to a stop.
- At a stop condition, the motor starts running when the frequency setting signal exceeds Pr. 522 + 2 Hz. The motor is accelerated at the Pr. 13 "Starting frequency" (0.01 Hz under PM sensorless vector control) at the start.

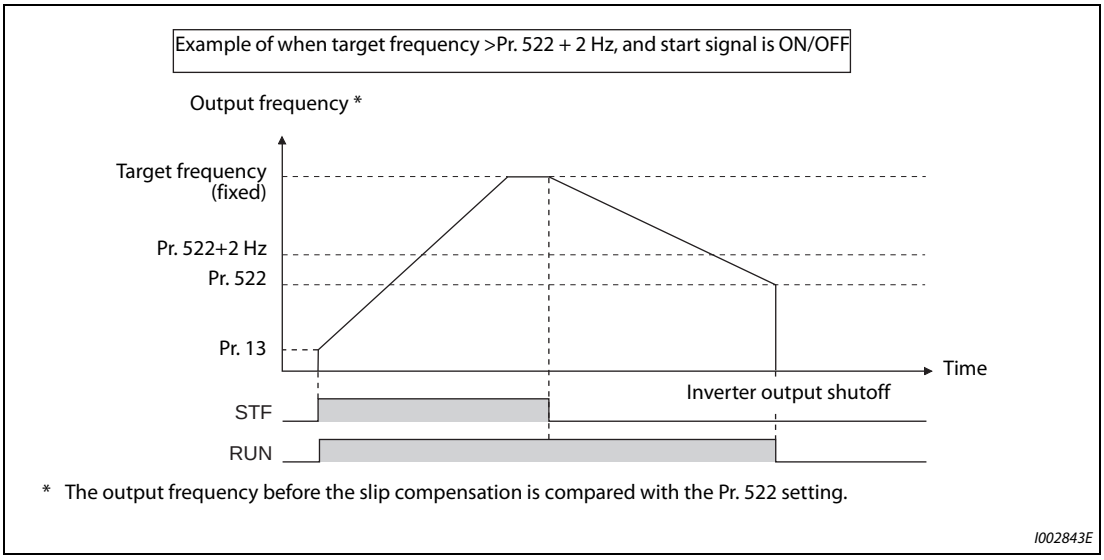


***Fig. 5-321:*** *Example for inverter output shutoff*

**NOTE** When the output stop function is valid (Pr. 522 ≠ "9999"), the DC injunction brake becomes invalid and the motor coasts to stop when the output frequency drops to the Pr. 522 setting or lower.

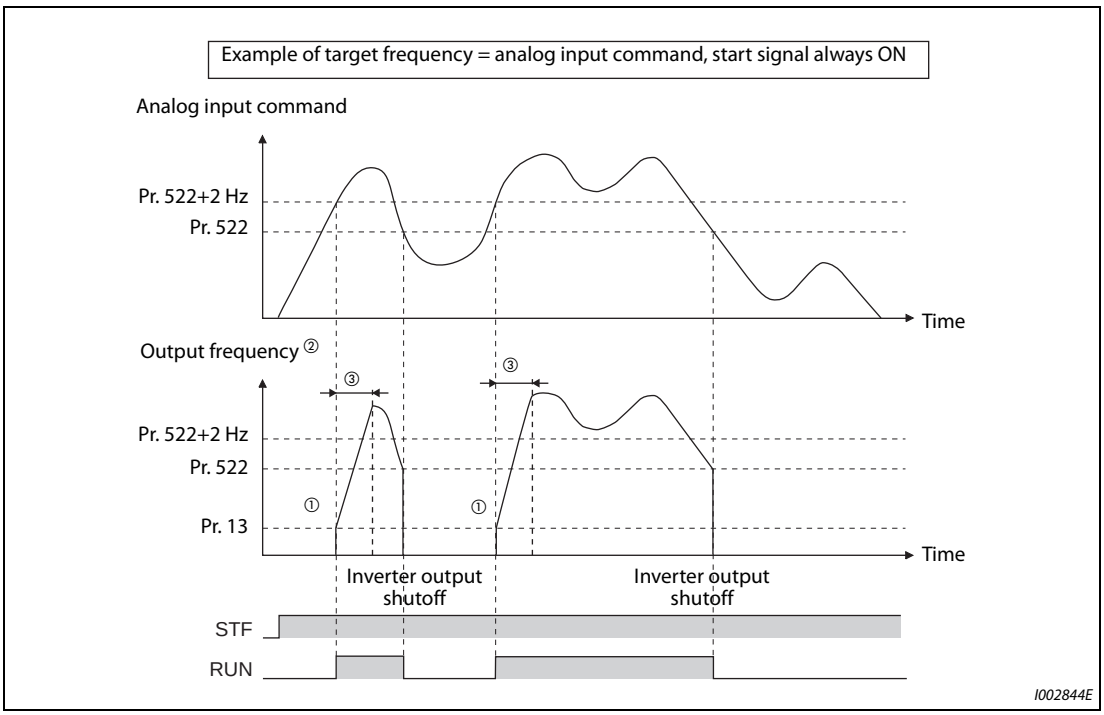


***Fig. 5-322:*** *Example for inverter output shutoff*

① At a stop condition, the motor is accelerated at the Pr. 13 "Starting frequency" (0.01 Hz under PM sensorless vector control).

② The output frequency to be compared with the Pr. 522 setting is the output frequency before slip compensation (V/F control and Advanced magnetic flux vector control), or the speed command value converted into the frequency (Real sensorless vector control, vector control, and PM sensorless vector control).

③ Steepness of the slope depends on the acceleration/deceleration time settings such as Pr. 7.

**NOTES**

Motor coasts when the command value drops to Pr. 522 or lower while the start signal is ON. If the command value exceeds Pr. 522+2 Hz again while coasting, the motor starts running at Pr. 13 Starting frequency (0.01 Hz under PM sensorless vector control). When the motor re-accelerates after coasting, the inverter may trip in some parameter settings. (Activation of the restart function is recommended especially for a PM motor.)

The output stop frequency function is disabled during PID control, JOG operation, power failure stop, traverse function operation, offline auto tuning, orientation control, position control, torque control, stop-on contact control, or machine analyzer operation.

Output stop function does not operate during reverse rotation deceleration. However, when the frequency setting signal and output frequency falls to Pr. 522 or lower, the inverter coasts to a stop.

During the output stop due to the output stop function (when forward/reverse command is given, but frequency command is not given), FWD/REV LED indication on the operation panel flickers fast.

**CAUTION:**

***A PM motor is a motor with interior permanent magnets. High voltage is generated at motor terminals while the motor is running. Do not touch motor terminals and other parts until the motor stops to prevent an electric shock.***

| Parameters referred to | | | |
|---|---|---|---|
| Pr. 10 | DC injection brake operation frequency | => | page 5-640 |
| Pr. 11 | DC injection brake operation time | => | page 5-640 |
| Pr. 12 | DC injection brake operation voltage | => | page 5-640 |
| Pr. 13 | Starting frequency | => | page 5-243, page 5-245 |

## 5.16.8 Stop selection

Select the stopping method (deceleration to stop or casting) at turn-OFF of the start signal.
Use this function to stop a motor with a mechanical brake at turn-OFF of the start signal.

Selection of start signal (STF/STR) operation can also be selected. (For start signal selection, refer to page 5-417.)

| Pr. | Name | Initial value | Setting range | Description | |
|---|---|---|---|---|---|
| | | | | Start signal (STF/STR) (Refer to page 5-417.) | Stop operation |
| 250 G106 | Stop selection | 9999 | 0 to 100 s | STF signal: Forward rotation start<br>STR signal: Reverse rotation start | It will coast to stop after set time when the start signal is turned OFF. |
| | | | 1000 s to 1100 s | STF signal: Start signal<br>STR signal: Forward/reverse rotation signal | It will coast to stop after (Pr. 250 – 1000) s when the start signal is turned OFF. |
| | | | 9999 | STF signal: Forward rotation start<br>STR signal: Reverse rotation start | It will perform deceleration stop when the start signal is turned OFF. |
| | | | 8888 | STF signal: Start signal<br>STR signal: Forward/reverse rotation signal | |

### Make the motor perform deceleration stop

- Set Pr. 250 = "9999 (initial value) or 8888".
- It will perform deceleration stop when the start signal (STF/STR) is turned OFF.

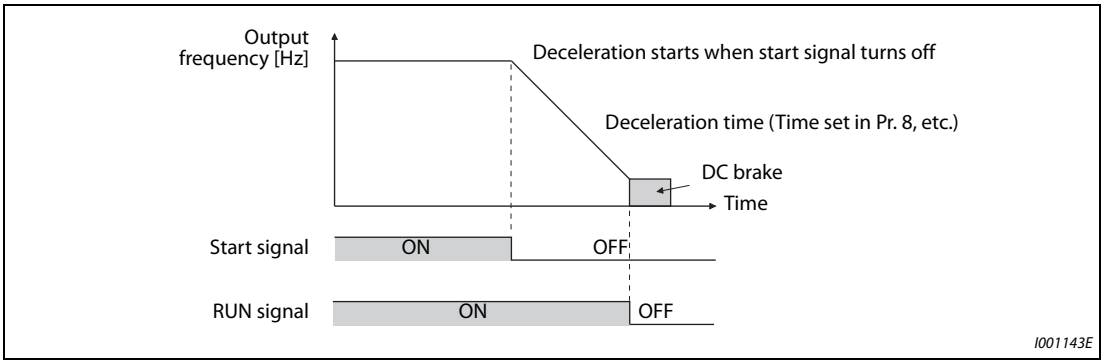


***Fig. 5-323:*** *Stop operation when parameter 250 = 8888 or 9999*

**Make the motor perform coast to stop**

- Set the time from the time the start signal is turned OFF to when the output is shutoff in Pr. 250. When set to "1000 to 1100", output is shutoff after (Pr. 250 – 1000) s.
- The output is shutoff after the set time of Pr. 250 has elapsed after the start signal is turned OFF. The motor will coast to stop.
- The RUN signal will be turned OFF at the time of output stop.

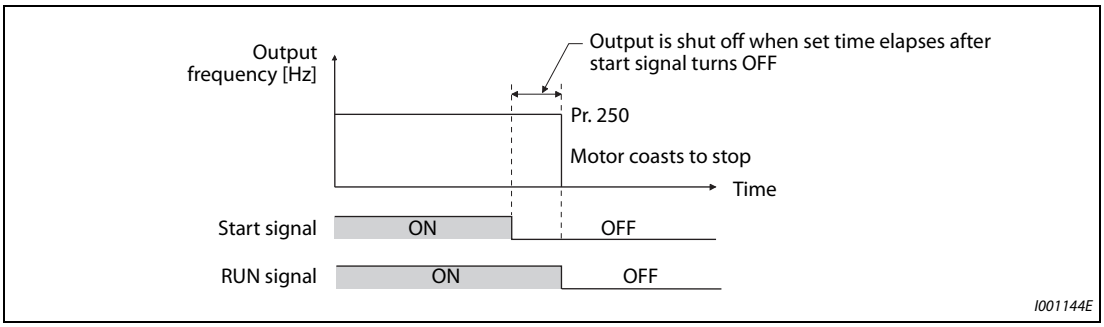


***Fig. 5-324:*** *Stop operation when parameter 250 ≠ 8888 or 9999*

**NOTES**

Stop selection is disabled when following functions are operating.
- Position control (Pr. 419 = "0")
- Power failure stop function (Pr. 261)
- PU stop (Pr. 75)
- Deceleration stop due to fault initiation (Pr. 875)
- Deceleration stop due to communication error (Pr. 502)
- Offline auto tuning (with motor rotation)

When Pr. 250 ≠ "9999 or 8888", acceleration/deceleration is performed in accordance to the frequency command until the output is shutoff by turning OFF the start signal.

When the restart signal is turned ON during the motor coasting, the operation is resumed from Pr. 13 "Starting frequency".

Even with the setting of coasting to stop, when the LX signal is turned ON, the motor does not coast but zero speed control or servo lock is applied.

| Parameters referred to | | | |
|---|---|---|---|
| Pr. 7 | Acceleration time | => | page 5-225 |
| Pr. 8 | Deceleration time | => | page 5-225 |
| Pr. 13 | Starting frequency | => | page 5-243, page 5-245 |
| Pr. 75 | Reset selection/disconnected PU detection/PU stop selection | => | page 5-184 |
| Pr. 261 | Power failure stop selection | => | page 5-558 |
| Pr. 502 | Stop mode selection at communication error | => | page 5-583 |
| Pr. 875 | Fault definition | => | page 5-292 |

## 5.16.9 Regenerative brake selection and DC feeding mode

- When performing frequent start and stop operation, usage rate of the regenerative brake can be increased by using the optional high-duty brake resistor (FR-ABR) or the brake unit (FR-BU2, BU, FR-BU).
- When using continuously in regenerative condition, use the power regeneration common converter (FR-CV) or power regeneration converter (MT-RC). The high power factor converter (FR-HC2) can be used also to reduce harmonics, improve power factor, and operate continuously in the regenerative status.
- It is possible to choose between the DC feeding mode 1, which will operate with DC power supply (terminals P and N), and DC feeding mode 2, which will normally operate in AC power supply (terminals R, S, and T) and operate in DC power supply (terminal P and N), such as batteries, at the time of power failure.
- While the power is supplied only to the control circuit, the reset operation when the power is supplied to the main circuit can be selected.

| Pr. | Name | Initial value | Setting range | Description |
|---|---|---|---|---|
| 30<br>E300 | Regenerative function selection | 0 ①③<br>10 ② | 0 to 2, 10, 11, 20, 21, 100 to 102, 110, 111, 120, 121 ① | First digit: Regeneration unit selection ("0" for built-in brake, "1" for high-duty brake resistor, "2" for FR-HC2 or FR-CV)<br>Second digit: Selection of the power supply terminal to the inverter ("0" for AC, "1" for DC, "2" for AC and DC)<br>Third digit: Reset when the power is supplied to the main circuit ("0" for reset, "1" for no reset)<br>For details, refer to the table below. |
| | | | 2, 10, 11, 102, 110, 111 ② | |
| | | | 0, 2, 10, 20, 100, 102, 110, 120 ③ | |
| 70<br>G107 ④ | Special regenerative brake duty | 0% | 0 to 100% | Set the %ED of the built-in brake transistor operation. |
| 599<br>T721 | X10 terminal input selection | 0 ①③<br>1 ② | 0 | Normally open input |
| | | | 1 | Normally closed input (NC contact input specification) |

① The initial value or setting range for the standard model

② The initial value or setting range for the separated converter type

③ The initial value or setting range for the IP55 compatible model

④ Available only with the standard model

### Details of the setting value

● FR-A820-03160(55K) or lower, FR-A840-01800(55K) or lower

| Regeneration unit | Power supply terminals of inverter | Pr. 30 Setting ④ | Pr. 70 Setting | Remarks |
|---|---|---|---|---|
| Built-in brake ③, Brake unit (FR-BU2 (GZG/GRZG/ FR-BR), FR-BU, BU) | R, S, T | 0 (initial value), 100 | — | The regenerative brake duty will be as follows.<br>• FR-A820-00046(0.4K) to 00250 (3.7K): 3%<br>• FR-A820-00340(5.5K), 00490 (7.5K): 2%<br>• FR-A840-00023(0.4K) to 00250 (7.5K): 2%<br>• Other than above: 0% (without the built-in brake resistor) |
| | P, N | 10, 110 | | |
| | R, S, T/P, N | 20, 120 | | |
| high-duty brake resistor (FR-ABR) | R, S, T | 1, 101 | 10% ①<br>6% ② | FR-ABR can be used with FR-A820-01250(22K) or lower and FR-A840-00620(22K) or lower. |
| | P, N | 11, 111 | | |
| | R, S, T/P, N | 21, 121 | | |
| High power factor converter (FR-HC2), Power regeneration common converter (FR-CV) | P, N | 2, 102 | 0% (initial value) | — |

***Tab. 5-300:*** *FR-A820-03160(55K) or lower, FR-A840-01800(55K) or lower*

● FR-A820-03800(75K) or higher, FR-A840-02160(75K) or higher

| Regeneration unit | Power supply terminals of inverter | Pr. 30 Setting ④ | Pr. 70 Setting |
|---|---|---|---|
| Without regenerative function | R, S, T | 0 (initial value), 100 | — |
| | P, N | 10, 110 | |
| | R, S, T/P, N | 20, 120 | |
| Brake unit (FR-BU2 (MT-BR5)) | R, S, T | 1, 101 | 0% (initial value) |
| | P, N | 11, 111 | |
| | R, S, T/P, N | 21, 121 | |
| Power regeneration converter (MT-RC) | R, S, T | 1, 101 | 0% (initial value) |
| High power factor converter (FR-HC2) | P, N | 2, 102 | — |

***Tab. 5-301:*** *FR-A820-03800(75K) or higher, FR-A840-02160(75K) or higher*

● FR-A842-07700(315K) or higher

| Regeneration unit | Pr. 30 Setting ④ |
|---|---|
| Without regenerative function (FR-CC2) | 10 (initial value), 110 |
| Brake unit (FR-CC2 + FR-BU2 (MT-BR5)) | 11, 111 |
| High power factor converter (FR-HC2) | 2, 102 |

***Tab. 5-302:*** *FR-A842-07700(315K) or higher*

① For the FR-A820-00490(7.5K) or lower and FR-A840-00250(7.5K) or lower.
② For the FR-A820-00630(11K) or higher, and FR-A840-00310(11K) or higher.
③ Built-in brake is installed on FR-A820-00490(7.5K) or lower, FR-A840-00250(7.5K) or lower.
④ While the power is supplied only to the control circuit with Pr. 30 = "100 or higher", the inverter reset is not performed when the power is supplied to the main circuit.

**NOTE** For the use of a brake resistor other than FR-ABR, contact your sales representative.

**When using built-in brake resistor, brake unit (FR-BU2, BU, FR-BU)**
**(FR-A820-03160(55K) or lower, FR-A840-01800(55K) or lower)**

When using the built-in brake, using FR-BU2 in combination with GZG/GRZG/FR-BR, or using BU or FR-BU, set Pr. 30 = "0 (initial value), 10, 20, 100, 110, 120". Setting of Pr. 70 will become disabled.
At this time, the regenerative brake duty is as follows. (The built-in brake resistor is equipped for the 7.5K or lower.)

– FR-A820-00250(3.7K) or lower . . . . . 3%

– FR-A820-00340(5.5K), FR-A820-00490(7.5K) . . . . . 2%

– FR-A840-00250(7.5K) or lower . . . . . 2%

– Other than above . . . . . 0% (without built-in brake resistor)

**When using high-duty brake resistor (FR-ABR)**
**(FR-A820-01250(22K) or lower, FR-A840-00620(22K) or lower)**

- Set Pr. 30 = "1, 11, 21".
- Set Pr. 70 as follows.
  – FR-A820-00490(7.5K) or lower, FR-A840-00250(7.5K) or lower . . . . . 10%
  – FR-A820-00630(11K) or higher, FR-A840-00310(11K) or higher. . . . . 6%

**When using brake unit (FR-BU2)**
**(FR-A820-03800(75K) or higher, FR-A840-02160(75K) or higher)**

To use FR-BU2 in combination with MT-BR5, set as follows.

- Set Pr. 30 = "1, 11, 21".
- Set Pr. 70 = "0% (initial value)".
- Set the brake unit FR-BU2, Pr. 0 "Brake mode selection" = "2".

**NOTE** When Pr. 30 = "1, 11, 21", oL (stall prevention (overvoltage)) does not operate.

**When using power regeneration converter (MT-RC)**

- Set Pr. 30 = "1, 11, 21".
- Set Pr. 70 = "0%".

**When using high power factor converter (FR-HC2), the power regeneration common converter (FR-CV) or the converter unit (FR-CC2)**

- To use FR-HC2 or FR-CV, set Pr. 30 = "2". Setting of Pr. 70 is invalid.
- When using FR-CC2, set Pr. 30 = "10" (initial value of separated converter type).
- Assign the following signal to a contact input terminal using any of Pr. 178 to Pr. 189 (input terminal function selection).
  - Inverter run enable signal (X10): FR-HC2 connection, FR-CV connection, FR-CC2 connection
    To have coordinated protection with FR-HC2,FR-CV or FR-CC2, shutoff the inverter output by the X10 signal.
    Input the RDY signal of the FR-HC2 (RDYB signal of FR-CV or RDA signal of FR-CC2).
  - FR-HC2/FR-CC2 connection, instantaneous power failure detection signal (X11): FR-HC2 connection, FR-CC2 connection
    During the operation using RS-485 communication, with the remote output and analog remote output functions enabled, the X11 signal is used to store the status when the inverter is set to store the status before an instantaneous power failure.
    Input the IPF signal (instantaneous power failure detection signal) of the FR-HC2 or FR-CC2.
- For the terminal to be used for the X10 and X11 signal, set "10" (X10), "11" (X11) in Pr. 178 to Pr. 189 and assign the function. (For separated converter types, the X10 signal is assigned to the terminal MRS in the initial setting.)

**NOTES**

For details of high-duty brake resistor (FR-ABR), brake unit, high power factor converter (FR-HC2), power regeneration common converter (FR-CV) connections, refer to page 2-76 to page 2-86. Also, for details of each option, refer to instruction manual of each option.

When changed to Pr. 30 = "2", inverter will reset, so "Err" is displayed on the operation panel.

**Logic reversing of inverter run enable signal (X10 signal, Pr. 599)**

- Use Pr. 599 "X10 terminal input selection" to select the X10 signal input specification between normally open (NO contact) and normally closed (NC contact). With the normally closed (NC contact) input specification, the inverter output is shut off by turning OFF (opening) the X10 signal.
- Changing the inverter logic (NO/NC contact) with the Pr. 599 setting is required according to the logic of the inverter operation enable signal sent from the option unit.
- The response time of the X10 signal is within 2 ms.

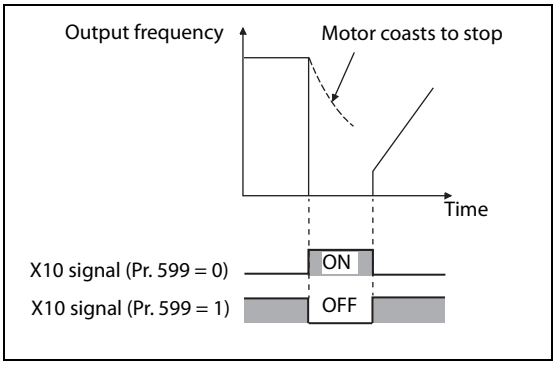


***Fig. 5-325:*** *X10 signal*

- Relationship between Pr. 599 and the inverter operation enable signal of each option unit

| Pr.599 setting | Corresponding signal of the option unit | | | Operation according to the X10 signal status |
|---|---|---|---|---|
| | FR-HC2 | FR-CV | FR-CC2 | |
| 0<br>(Initial value of standard models and IP55 compatible models) | RDY<br>(negative logic)<br>(initial setting) | RDYB | RDB | X10-ON: Inverter output shutoff (NO contact) |
| 1<br>(Initial value of separated converter types) | RDY<br>(positive logic) | RDYA | RDA | X10-OFF: Inverter output shutoff (NC contact) |

***Tab. 5-303:*** *Selecting NO/NC contact for X10 signal*

**NOTES**

If the X10 signal is unassigned while Pr. 30 = "2" (FR-HC2/FR-CV connection) or "10 or 11" (DC feeding mode 1), the MRS signal can be used as the X10 signal. At this time, logic setting for the signal will follow Pr. 17 "MRS input selection".

MRS signal is enabled from any of the communication or external input, but when using the MRS signal as Inverter run enable signal (X10), it can be used as input from external.

When FR-HC or MT-HC is connected, set Pr. 599 = "0 (initial value)".

When the terminal assignment is changed with Pr. 178 to Pr. 189 (input terminal function selection), wiring may be mistaken due to different terminal name and signal contents, or may affect other functions. Set parameters after confirming the function of each terminal.

**Regenerative brake usage rate alarm output and alarm signal (RBP signal) (Standard models)**

- When the usage rate of regenerative brake reaches 85% of the Pr. 70 setting, [RB] is displayed on the operation panel and alarm signal (RBP) is output. When it reaches 100% of the Pr. 70 setting, it will become regenerative overvoltage (E.OV[]).
- The inverter will not shutoff output with the alarm signal.
- For the terminal to be used for the RBP signal output, set "7 (positive logic) or 107 (negative logic)"to one of Pr. 190 to Pr. 196 (output terminal function selection), and assign the function.

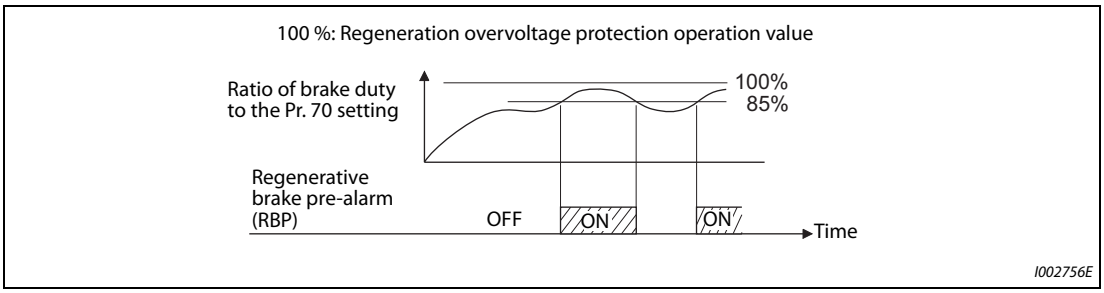


***Fig. 5-326:*** *Regenerative overload*

**NOTES**

When Pr. 30 = "0 (initial value), 10 or 20" for FR-A820-00630(11K) or higher and FR-A840-00310(11K) or higher, the RB display and the RBP signal are disabled.

When the terminal assignment is changed with Pr. 190 to Pr. 196 (output terminal function selection), wiring may be mistaken due to different terminal name and signal contents, or may affect other functions. Set parameters after confirming the function of each terminal.

**Reset when the power is supplied to the main circuit (Pr. 30 = "100, 101, 102, 110, 111, 120 or 121")**

- While the power is supplied only to the control circuit (R1/L11, S1/L12 input or 24 V external power supply) with Pr. 30 = "100 or higher", the inverter reset is not performed when the power is supplied (R/L1, S/L2, T/L3 input) to the main circuit.
- When a communication option, etc. is used, communication interruption due to the inverter reset can be avoided.

**NOTE**

When the power is supplied to the main circuit while the inverter protective function is activated, the inverter reset is performed even if it the setting is "No reset" at power ON.

**DC feeding mode 1 (Pr. 30 = "10, 11") (Standard models and IP55 compatible models)**

- For standard models and IP55 compatible models, setting Pr. 30 = "10 or 11" allows operation with a DC power supply.
- Do not connect anything to the AC power supply connecting terminals R/L1, S/L2, and T/L3, and connect the DC power supply to the terminals P/+ and N/-. Also, remove the jumpers between terminal R/L1 and R/L11as well as between S/L2 and S1/L21, and connect the terminals R1/L11 and S1/L21 to the terminals P/+ and N/-.
- Following is a connection example.

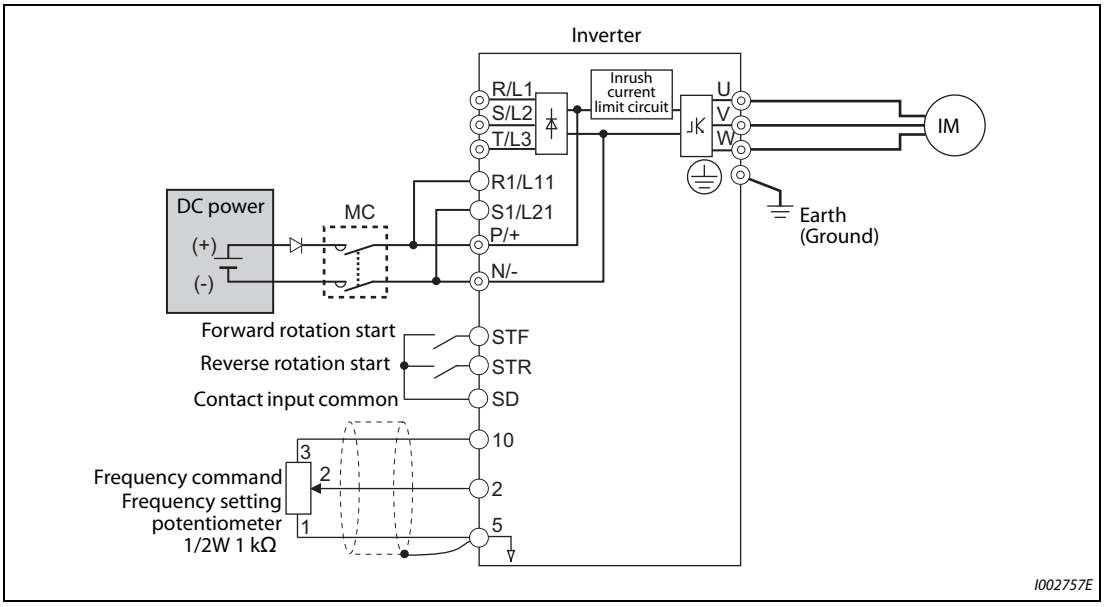


***Fig. 5-327:*** *Connection example for DC feeding mode 1*

**CAUTION:**

***Do not connect a separated converter type inverter to a DC power supply. Doing so may damage the inverter.***

**DC feeding mode 2 (Pr. 30 = "20, 21") (Standard models and IP55 compatible models)**

- When Pr. 30 = "20, 21", it will normally operate with AC power supply and operate with DC power supply such as batteries at the time of power failure.
- Connect the AC power supply to the AC power supply connecting terminals R/L1, S/L2, and T/L3, and connect the DC power supply to the terminals P/+ and N/-. Also, remove the jumpers between terminal R/L1 and R/L11as well as between S/L2 and S1/L21, and connect the terminals R1/L11 and S1/L21 to the terminals P/+ and N/-.
- Operation with DC current is possible by turning ON the DC feeding operation permission signal (X70). For details on I/O signal, refer to following table.

| Signal name | | Name | Description | Parameter setting |
|---|---|---|---|---|
| Input | X70 | DC feeding operation permission signal | To operate with DC feeding, turn ON the X70 signal.<br>When the inverter output is shutoff due to power failure, it will be possible to start up 200 ms after turning ON the X70 signal. (Automatic restart after instantaneous power failure can start after the time set in Pr. 57 has elapsed.)<br>When the X70 signal is turned OFF while operating the inverter, output shutoff (Pr. 261 = 0) or deceleration stop (Pr. 261 ≠ 0) will occur. | Set "70" to either of Pr. 178 to Pr. 189. |
| | X71 | DC feeding cancel signal | Turn ON when stopping the DC feeding.<br>When the X71 signal is turned ON during the operation of the inverter and X70 signal is ON, output shutoff (Pr. 261 = 0) or deceleration stop (Pr. 261 ≠ 0) will occur, and Y85 signal will turn OFF after stopping.<br>After turning ON the X71 signal, operation is not possible even if the X70 signal is turned ON. | Set "71" to either of Pr. 178 to Pr. 189. |
| Output | Y85 | DC feeding signal | This will turn ON during power failure or undervoltage of the AC power supply. It will turn OFF when the X71 signal turns ON or power restoration.<br>The Y85 signal will not turn OFF even with the power restoration while the inverter is running, but turns OFF after stopping the inverter.<br>When the Y85 signal is turned ON due to undervoltage, the Y85 signal will not turn OFF even when the undervoltage is resolved.<br>The ON/OFF status is maintained when the inverter is reset. | Set "85 (positive logic) or 185 (negative logic)" to one of Pr. 190 to Pr. 196. |

***Tab. 5-304:*** *I/O signals for DC feeding mode 2*

- Following is the connection diagram of switching to DC power supply using the power failure detection of the inverter.

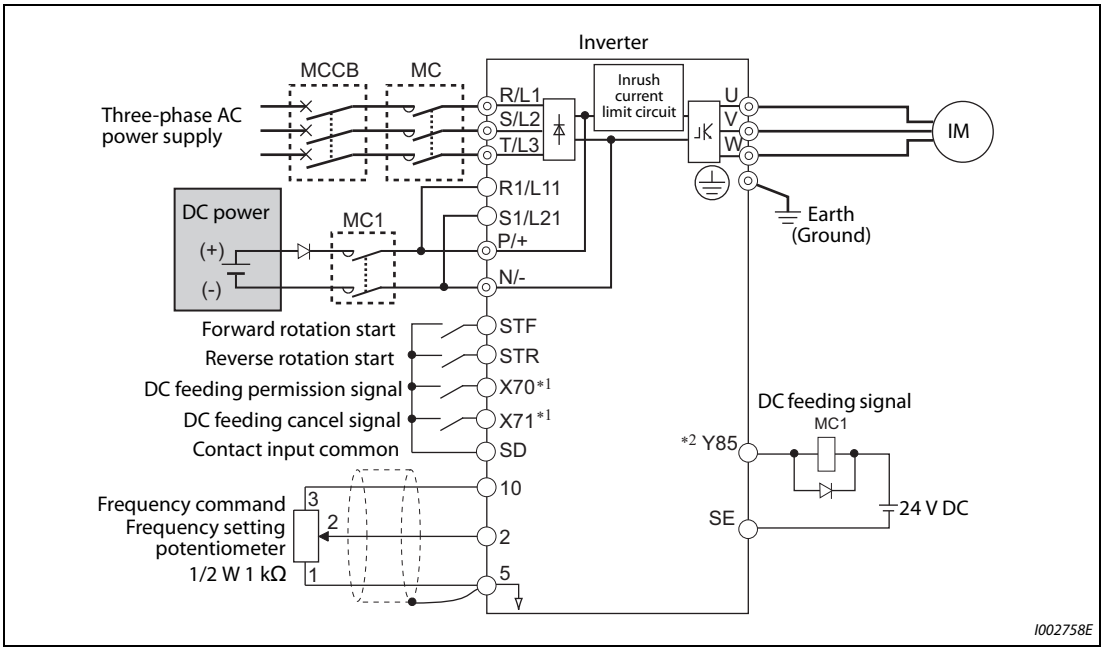


***Fig. 5-328:*** *Connection example for DC feeding mode 2*

① Assign the function by setting Pr. 178 to Pr. 189 (input terminal function selection).

② Assign the function by setting Pr. 190 to Pr. 196 (output terminal function selection).

● Operation example at the time of power failure occurrence 1

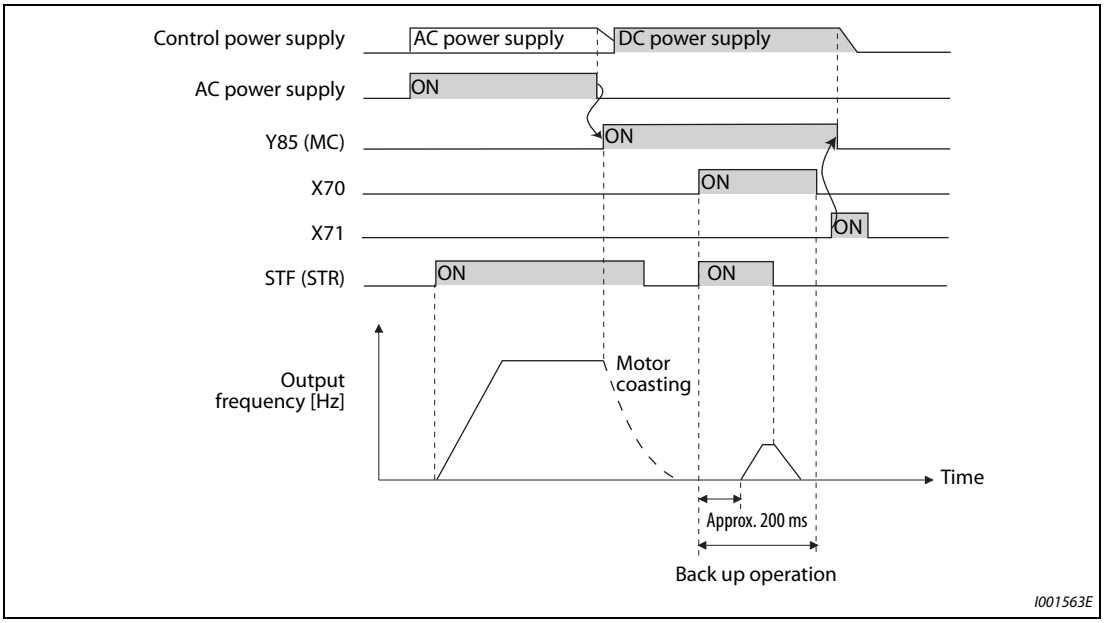


***Fig. 5-329:*** *Operation example 1 at power failure*

● Operation example at the time of power failure occurrence 2 (when the AC power supply is restored)

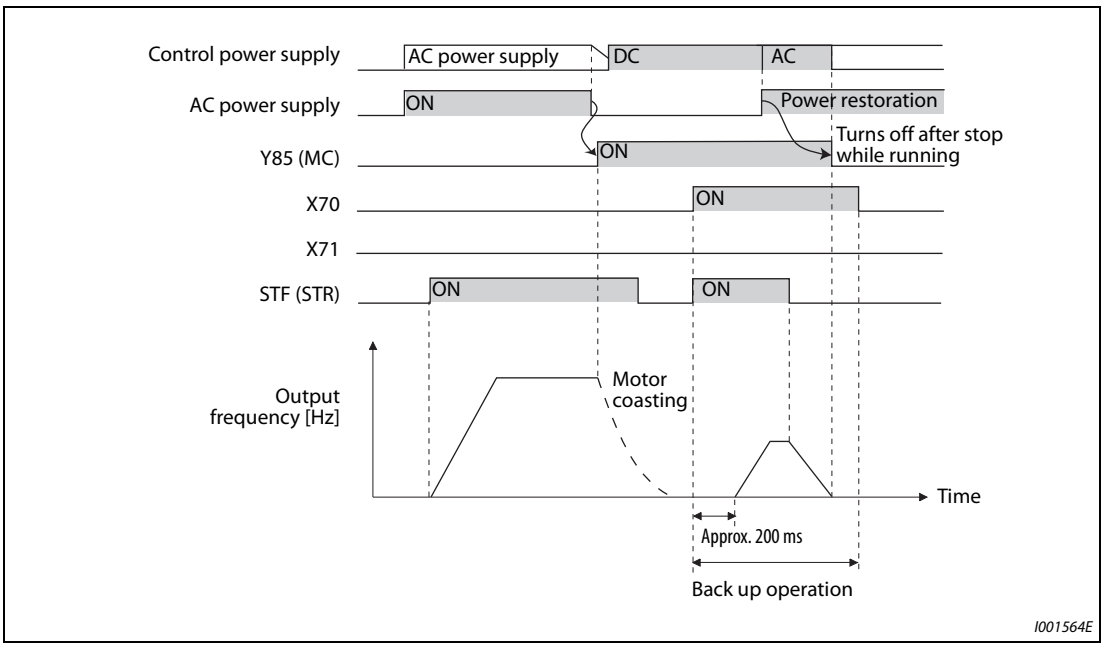


***Fig. 5-330:*** *Operation example 2 at power failure (when DC power is restored))*

- Operation example at the time of power failure occurrence 3 (when continuing the operation)

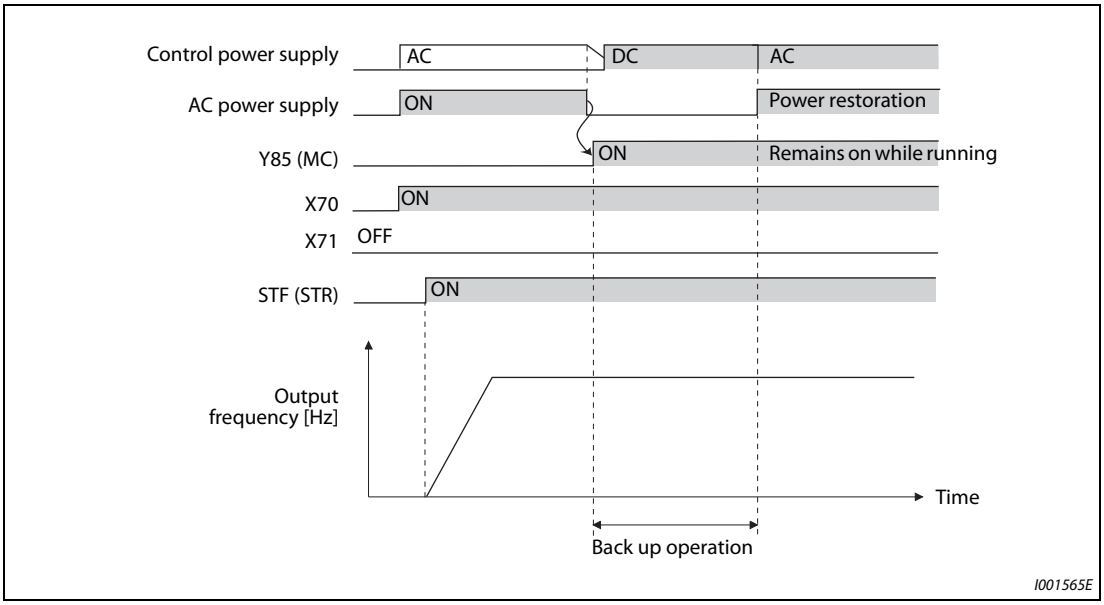


***Fig. 5-331:*** *Operation example 3 at power failure (when continuous operation is performed)*

**Power supply specification for DC feeding (Standard models and IP55 compatible models)**

| | | |
|---|---|---|
| 200 V class | Rated input DC voltage | 283 V DC to 339 V DC |
| | Permissible fluctuation | 240 V DC to 373 V DC |
| 400 V class | Rated input DC voltage | 537 V DC to 679 V DC |
| | Permissible fluctuation | 457 V DC to 740 V DC |

***Tab. 5-305:*** *Power supply specification for DC feeding*

**NOTES**

The voltage between P and N will temporarily increase to 415 V (830 V) or higher during the regenerative driving, so take caution on the selection of the DC power supply.

When an AC power supply is connected to the R/L1, S/L2, and T/L3 terminals during the DC feeding with Pr. 30 = "2, 10, 11" (DC feeding), an option fault (E.OPT) will occur.

When set to Pr. 30 = "2, 10, 11, 20, 21" (DC feeding) and operated by DC feeding, detection of undervoltage (E.UVT) and instantaneous power failure (E.IPF) is not performed.

When DC power is switched on, a larger inrush current flows than in AC power. The number of power-on times should be minimized.

Changing the terminal assignment using Pr. 178 to Pr. 189 (input terminal function selection) or Pr. 190 to Pr. 196 (output terminal function selection) may affect the other functions. Set parameters after confirming the function of each terminal.

**WARNING:**

***The value set in Pr. 70 must not exceed the setting of the brake resistor used.***

***It may cause overheating.***

| Parameters referred to | | | |
|---|---|---|---|
| Pr. 17 | MRS input selection | => | page 5-413 |
| Pr. 57 | Restart coasting time | => | page 5-540, page 5-549 |
| Pr. 178 to Pr. 189 | (input terminal function selection) | => | page 5-409 |
| Pr. 190 to Pr. 196 | (output terminal function selection) | => | page 5-350 |
| Pr. 261 | Power failure stop selection | => | page 5-558 |

## 5.16.10 Regeneration avoidance function

The regenerative status can be avoided by detecting the regenerative status and raising the frequency.

- Continuous operation is possible by increasing the frequency automatically so it will not go into regenerative operation even when the fan is turned forcefully by other fans in the same duct.

| Pr. | Name | Initial value | | Setting range | Description |
|---|---|---|---|---|---|
| 882<br>G120 | Regeneration avoidance operation selection | 0 | | 0 | Disables regeneration avoidance function |
| | | | | 1 | Constantly enables regeneration avoidance function |
| | | | | 2 | Enables regeneration avoidance function only during constant-speed operation |
| 883<br>G121 | Regeneration avoidance operation level | 200 V Class | 380 V DC | 300 to 800 V | Set the bus voltage level to operate the regeneration avoidance operation. When the bus voltage level is set low, it will be harder to generate overvoltage error, but actual deceleration time will be longer.<br>Set the setting value higher than power supply voltage × $\sqrt{2}$. |
| | | 400 V Class | 760 V DC | | |
| 884<br>G122 | Regeneration avoidance at deceleration detection sensitivity | 0 | | 0 | Disables regeneration avoidance due to bus voltage change rate |
| | | | | 1 to 5 | Set the sensitivity to detect the bus voltage change rate<br>Setting value: 1 ➔ 5<br>Detection sensitivity: Low ➔ High |
| 885<br>G123 | Regeneration avoidance compensation frequency limit value | 6 Hz | | 0 to 590 Hz | Set the limit value for frequency to rise when the regeneration avoidance function operates. |
| | | | | 9999 | Disables frequency limit |
| 886<br>G124 | Regeneration avoidance voltage gain | 100% | | 0 to 200% | Adjust the response at the time of regeneration avoidance operation. When the setting value is set larger, response against the bus voltage change will improve, but the output frequency may become unstable.<br>When the vibration cannot be stabilized even if the setting value of Pr. 886 is made smaller, set the setting value of Pr. 665 smaller. |
| 665<br>G125 | Regeneration avoidance frequency gain | 100% | | 0 to 200% | |

**What is regeneration avoidance operation? (Pr. 882, Pr. 883)**

- When the regenerative status is large, DC bus voltage will rise, which may cause overvoltage alarm (E.OV[]).
  Regenerative status can be avoided by detecting this rise of bus voltage, and raising the frequency when the bus voltage level exceeds Pr. 883 "Regeneration avoidance operation level".
- The regeneration avoidance operation can be selected to operate constantly or operate only during constant speed.
- The regeneration avoidance function is enabled by setting to Pr. 882 "Regeneration avoidance operation selection" = "1, 2".

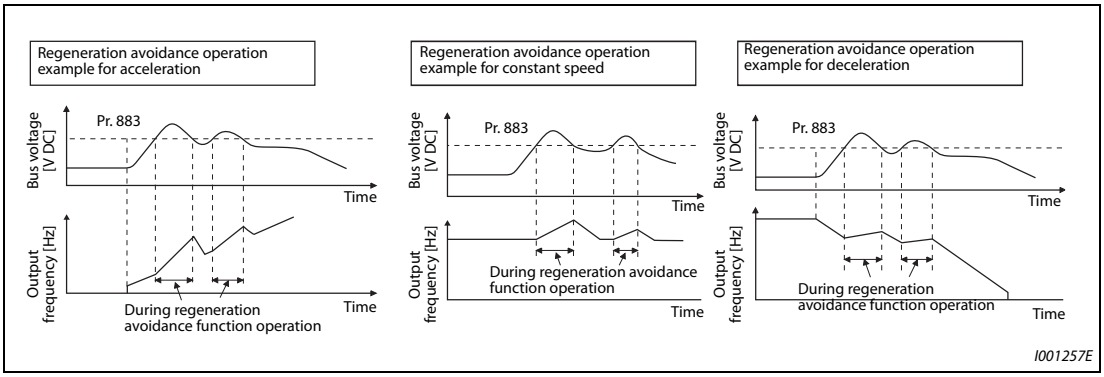


***Fig. 5-332:*** *Regeneration avoidance function*

**NOTES**

The slope of frequency rising or lowering by the regeneration avoidance operation will change depending on the regenerative status.

The DC bus voltage of the inverter will be approximately $\sqrt{2}$ times of the normal input voltage.
The bus voltage will be approximately 311 V (622 V) DC in case of input voltage of 220 V (440 V) AC.
However, it may vary depending on the input power supply waveform.

Make sure that the setting value of Pr. 883 will not get under DC bus voltage level. The frequency will rise with operation of the regeneration avoidance function even at the time of no regenerative status.

The stall prevention (overvoltage) (oL) will only operate during deceleration, stopping the lowering of output frequency, but on the other hand, the regeneration avoidance function will constantly operate (Pr. 882 = "1") or operate only at constant speed (Pr. 882 = "2"), and raise the frequency depending on the amount of regeneration.

When the motor becomes unstable due to operation of the stall prevention (overcurrent) (OL) during the regeneration avoidance operation, increase the deceleration time or lower the setting of Pr. 883.

Under position control, the regeneration avoidance function is not activated.

**To detect the regenerative status during deceleration faster (Pr. 884)**

Since a rapid change in bus voltage cannot be handled by bus voltage level detection during the regeneration avoidance operation, deceleration is stopped by detecting the change in bus voltage and if it is equal or lower than Pr. 883 "Regeneration avoidance operation level".
Set the detectable bus voltage change rate as the detection sensitivity in Pr. 884 "Regeneration avoidance at deceleration detection sensitivity". A larger set value increases the detection sensitivity.

**NOTE**

When the setting value is too small (detection sensitivity is not good), detection will not be possible, and regeneration avoidance will operate even with the bus voltage change caused by a change in the input power.

**Limit regeneration avoidance operation frequency (Pr. 885)**

- It is possible to assign a limit to the output frequency corrected (rise) by the regeneration avoidance operation.
- Limit of the frequency is output frequency (frequency before regeneration avoidance operation) + Pr. 885 "Regeneration avoidance compensation frequency limit value" for during acceleration and constant speed.
  During deceleration, when the frequency increases due to the regeneration avoidance operation and exceeds the limit value, the limit value will be retained until the output frequency is reduced to be the half the Pr. 885 setting.
- When the frequency that have increased by the regeneration avoidance operation exceeds Pr. 1 "Maximum frequency", it will be limited to the maximum frequency.
- By setting to Pr. 885 = "9999", regeneration avoidance operation frequency limitation is disabled.
- Set using the motor rated slip frequency as a guideline. Raise the setting value if the overvoltage protection function (E.OV[]) operation at the start of deceleration.

$$\text{Rated motor slip frequency} = \frac{\text{Synchronized speed at the time of base frequency - rated rotation speed}}{\text{Synchronized speed at the time of base frequency}} \times \text{Rated motor frequency}$$

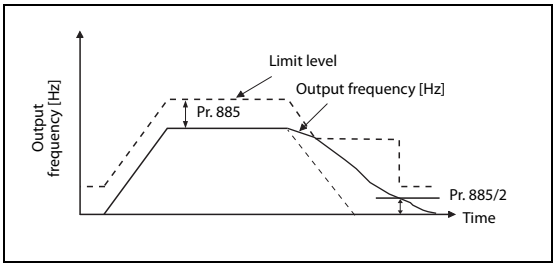


I001260E

***Fig. 5-333:***
*Limit the output frequency*

**Adjustment of regeneration avoidance operation (Pr. 665, Pr. 886)**

- When the frequency becomes unstable at the time of regeneration avoidance operation, set the setting value for Pr. 886 "Regeneration avoidance voltage gain" smaller. On the other hand, if an overvoltage fault occurs due to a sudden regeneration, increase the setting.
- When the vibration cannot be stabilized even if the setting value of Pr. 886 is made smaller, set the setting value of Pr. 665 "Regeneration avoidance frequency gain" smaller.

**NOTES**

During the regeneration avoidance operation, the stall prevention (overvoltage) (oL) is displayed and the overload alarm (OL) signal is output. The operation when the OL signal is output can be set with Pr. 156 "Stall prevention operation selection". The OL signal output timing can be set with Pr. 157 "OL signal output timer".

The stall prevention is enabled even at the time of regeneration avoidance operation.

The regeneration avoidance function cannot decrease the actual deceleration time for the motor to stop. The actual deceleration time is determined by the regenerative power consumption performance, so to decrease the deceleration time, consider using a regeneration unit (FR-BU2, BU, FR-BU, FR-CV, FR-HC2) or brake resistor (FR-ABR, etc.).

When using regeneration unit (FR-BU2, BU, FR-BU, FR-CV, FR-HC2) or brake resistor (FR-ABR, etc.) to consume the regenerative power, set to Pr. 882 = "0 (initial value)" (disables regeneration avoidance function). When consuming the regenerative power at the time of deceleration with the regeneration unit, etc., set to Pr. 882 = "2" (enables regeneration avoidance function only at the time of constant speed).

When using the vector control and the regeneration avoidance function together, there may be a sound from the motor at the time of deceleration. In such case, adjust the gain by performing easy gain tuning, etc. (Refer to page 5-66.)

| Parameters referred to | | | |
|---|---|---|---|
| Pr. 1 | Maximum frequency | => | page 5-300 |
| Pr. 8 | Deceleration time | => | page 5-225 |
| Pr. 22 | Stall prevention operation level | => | page 5-83 |

## 5.16.11 Increased magnetic excitation deceleration V/F Magnetic flux Sensorless Vector

Increase the loss in the motor by increasing the magnetic flux at the time of deceleration. Deceleration time can be reduced by suppressing the stall prevention (overvoltage) (oL).

It will make possible to reduce the deceleration time without a brake resistor. (Usage can be reduced if a brake resistor is used.)

| Pr. | Name | Initial value | Setting range | Description |
|---|---|---|---|---|
| 660<br>G130 | Increased magnetic excitation deceleration operation selection | 0 | 0 | Without increased magnetic excitation deceleration |
| | | | 1 | With increased magnetic excitation deceleration |
| 661<br>G131 | Magnetic excitation increase rate | 9999 | 0 to 40% | Set the increase of excitation. |
| | | | 9999 | Magnetic excitation increase rate 10% under V/F control and Advanced magnetic flux vector control |
| | | | | Magnetic excitation increase rate 0% under Real sensorless vector control and vector control |
| 662<br>G132 | Increased magnetic excitation current level | 100% | 0 to 300% | The increased magnetic excitation rate is automatically lowered when the output current exceeds the setting value at the time of increased magnetic excitation deceleration. |

**Setting of increased magnetic excitation rate (Pr. 660, Pr. 661)**

- To enable the increased magnetic excitation deceleration, set Pr. 660 "Increased magnetic excitation deceleration operation selection" = "1".
- Set the amount of excitation increase in Pr. 661 "Magnetic excitation increase rate". Increased magnetic excitation deceleration will be disabled when Pr. 661 = "0".
- When the DC bus voltage exceeds the increased magnetic excitation deceleration operation level during the deceleration, excitation is increased in accordance with the setting value in Pr. 661.
- The increased magnetic excitation deceleration will continue even if the DC bus voltage goes under the increased magnetic excitation deceleration operation level during strengthened excitation deceleration.

| Inverter | Increased magnetic excitation deceleration operation level |
|---|---|
| 200 V class | 340 V |
| 400 V class | 680 V |
| With 500 V input | 740 V |

***Tab. 5-306:*** *Strengthened excitation deceleration operation level*

- When the stall prevention (overvoltage) occurs during the increased magnetic excitation deceleration operation, increase the deceleration time or raise the setting value of Pr. 661. When the stall prevention (overcurrent) occurs, increase the deceleration time or lower the setting value of Pr. 661.
- Increased magnetic excitation deceleration is enabled with V/F control, Advanced magnetic flux vector control, Real sensorless vector control (speed control), and vector control (speed control).

**NOTE**

The increased magnetic excitation deceleration will be disabled in the following conditions:
During PM sensorless vector control, power failure stop, orientation control, operation with FR-HC2/FR-CV, energy saving operation, Optimum excitation control, and stop-on-contact control.

**Overcurrent prevention function (Pr. 662)**

- The overcurrent prevention function is valid under V/F control and Advanced magnetic flux vector control.
- Increased magnetic excitation rate is lowered automatically when the output current exceeds Pr. 662 at the time of increased magnetic excitation deceleration.
- When the inverter protective function (E.OC□, E.THT) operates due to increased magnetic excitation deceleration, adjust with Pr. 662.
- Overcurrent preventive function will be disabled when Pr. 662= "0".

**NOTE**

When set to Pr. 662 > Pr. 22 "Stall prevention operation level", overcurrent preventive function will operate at the setting value of Pr. 22. (Operates at Pr. 622 when Pr. 22 = "0")

| Parameters referred to | | | |
|---|---|---|---|
| Pr. 22 | Stall prevention operation level | => | page 5-83 |
| Pr. 30 | Regenerative function selection | => | page 5-652 |
| Pr. 60 | Energy saving control selection | => | page 5-637 |
| Pr. 162 | Automatic restart after instantaneous power failure selection | => | page 5-540, page 5-549 |
| Pr. 270 | Stop-on contact/load torque high-speed frequency control selection | => | page 5-474 |
| Pr. 261 | Power failure stop selection | => | page 5-558 |
| Pr. 350 | Stop position command selection | => | page 5-487 |

## 5.16.12 Slip compensation V/F

Slip of the motor is estimated from the inverter output current at the time of V/F control, and maintain the rotation of the motor constant.

| Pr. | Name | Initial value | Setting range | Description |
|---|---|---|---|---|
| 245<br>G203 | Rated slip | 9999 | 0.01 to 50% | Set the rated motor slip. |
| | | | 0, 9999 | Without slip compensation |
| 246<br>G204 | Slip compensation time constant | 0.5s | 0.01 to 10s | Set the response time of the slip compensation. Response will become faster when the value is lowered, but the regenerative overvoltage (E.OV[]) error will occur more frequently when the load inertia is larger. |
| 247<br>G205 | Constant-power range slip compensation selection | 9999 | 0 | Do not perform slip compensation at constant output range (frequency range higher than the frequency set in Pr. 3). |
| | | | 9999 | Perform the slip compensation of the constant output range. |

- Slip compensation will become enabled by calculating the rated motor slip, and setting to Pr. 245. Slip compensation is not performed when Pr. 245 = "0, 9999".

$$\text{Rated slip} = \frac{\text{Synchronized speed at the time of base frequency - rated rotation speed}}{\text{Synchronized speed at the time of base frequency}} \times 100[\%]$$

**NOTES**

When the slip compensation is performed, the output frequency may become larger than the set frequency. Set Pr. 1 "Maximum frequency" higher than the set frequency.

Slip compensation will be disabled in following cases.
At the times of stall preventive (oL, OL) operation, regeneration avoidance operation, auto tuning, encoder feedback control operation

| Parameters referred to | | | |
|---|---|---|---|
| Pr. 1 | Maximum frequency | => | page 5-300 |
| Pr. 3 | Base frequency | => | page 5-631 |

## 5.16.13 Encoder feedback control V/F Magnetic flux

By detecting the rotation speed of the motor with the speed detector (encoder) and feeding it back to the inverter, output frequency of the inverter is controlled to keep the speed of the motor constant even for the load change.
Option FR-A8AP is required.

| Pr. | Name | Initial value | Setting range | Description | |
|---|---|---|---|---|---|
| 144<br>M002 | Speed setting switchover | 4 | 0, 2, 4, 6, 8, 10, 12, 102, 104, 106, 108, 110, 112 | Set the number of motor poles for the operation by V/F control and the encoder feed control. | |
| 285<br>H416 | Overspeed detection frequency ① | 9999 | 0 to 30 Hz | When the difference between the detected frequency and the output frequency exceeds the set value at the time of encoder feedback control, an inverter fault (E.MB1) is generated. | |
| | | | 9999 | Overspeed detection disabled. | |
| 359 ②<br>C141 | Encoder rotation direction | 1 | 0 | Set when using a motor for which forward rotation (encoder) is clockwise (CW) viewed from the shaft. | Set for the operation at 120 Hz or less. |
| | | | 100 | | Set for the operation at a frequency higher than 120 Hz. |
| | | | 1 | Set when using a motor for which forward rotation (encoder) is counterclockwise (CCW) viewed from the shaft. | Set for the operation at 120 Hz or less. |
| | | | 101 | | Set for the operation at a frequency higher than 120 Hz. |
| 367 ②<br>G240 | Speed feedback range | 9999 | 0 to 590 Hz | Set the range of speed feedback control. | |
| | | | 9999 | Disables encoder feedback control | |
| 368 ②<br>G241 | Feedback gain | 1 | 0 to 100 | Set when the rotation is unstable or response is slow. | |
| 369 ②<br>C140 | Number of encoder pulses | 1024 | 0 to 4096 | Set the number of encoder pulses output.<br>Set the number of pulses before it is multiplied by 4. | |

① The speed deviation excess detection frequency is used when FR-A8AP (option) is mounted and vector control is performed. (For the details, refer to page 5-115.)

② These parameters are available when FR-A8AP (option) is installed.

**Setting before operation (Pr. 144, Pr. 359, Pr. 369)**

- When driving with V/F control and the encoder feedback control, set the number of motor poles in Pr. 144 "Speed setting switchover" in accordance with the applied motor. During Advanced magnetic flux vector, the Pr. 81 "Number of motor poles" setting is used, so the Pr. 144 setting does not need to be changed.
- Using Pr. 359 "Encoder rotation direction" and Pr. 369 "Number of encoder pulses", set the rotation direction and the number of pulses for the encoder.

**NOTES**

When the inverter is operated with Pr. 144 = "0, 10, 110", it will cause E.1 to E.3.

When set to Pr. 144 = "102, 104, 106, 108", number with 100 subtracted will be set as the number of poles.

When Pr. 81 is set, setting value for Pr. 144 will be automatically changed, but even if Pr. 144 is changed, Pr. 81 will not automatically change.

Control with correct speed is not possible if the number of poles for the applied motor is incorrect. Make sure to confirm before operation.

Encoder feedback control is not possible when the rotation direction setting of the encoder is incorrect. (Operation of the inverter is possible.)
Confirm with the rotation direction indicator on the parameter unit.

**Selection of encoder feedback control (Pr. 367)**

- When a value other than "9999" is set in Pr. 367 "Speed feedback range", encoder feedback control is valid.
  Using the set point (frequency at which stable speed operation is performed) as reference, set the higher and lower setting range. Normally, set the frequency converted from the slip amount (r/min) of the rated motor speed (rated load). If the setting is too large, response becomes slow.

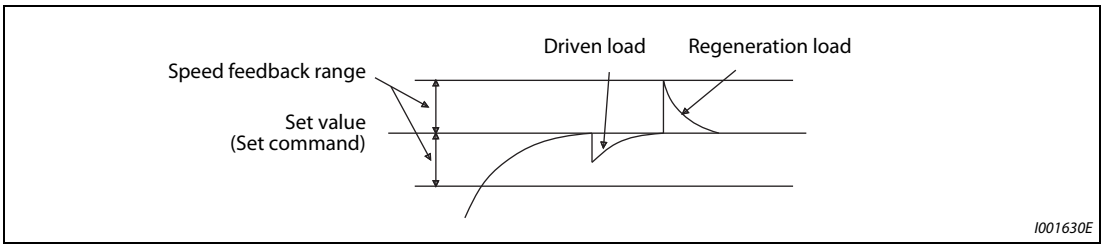


***Fig. 5-334:*** *Setting the range of the speed feedback range*

- For example, when the rated speed of a motor (4 poles) is 1740 r/min at 60 Hz,
  Slip Nsp = Synchronous speed – Rated speed
  = 1800 – 1740
  = 60 (r/min)

  Frequency equivalent to slip (fsp) = Nsp × Number of poles/120
  = 60 × 4/120
  = 2 (Hz)

### Feedback gain (Pr. 368)

- Set Pr. 368 "Feedback gain" when the rotation is unstable or response is slow.
- Response of the feedback will become slow when the acceleration/deceleration time is long. In such case, increase the setting value of Pr. 368.

| Pr. 368 setting | Description |
|---|---|
| Pr. 368 > 1 | Response will become faster but it may cause overcurrent or become unstable. |
| 1 > Pr. 368 | Response will become slower but it will become more stable. |

***Tab. 5-307:*** *Setting of parameter 368*

### Overspeed detection (Pr. 285)

- To prevent malfunction when the correct pulse signal cannot be detected from the encoder, when [detection frequency] – [output frequency] > Pr. 285
  at the time of encoder feedback control, protective function (E.MB1) will activate and the inverter will shutoff output.
- Overspeed detection is not performed when Pr. 285 = "9999".

**NOTES**

Couple the encoder on the same axis as the motor axis without any mechanical clatter, with speed ratio of 1:1.

Encoder feedback control is not performed during the acceleration and deceleration to prevent the unstable phenomenon such as hunting.

Encoder feedback control is performed after the output frequency has reached [set frequency] ± [speed feedback range] once.

When following status occurs at the time of encoder feedback control operation, inverter will not stop with an alarm, and operate with output frequency of [set frequency] ± [speed feedback range], and will not follow the speed of the motor.
- When the pulse signal from the encoder is lost due to a break, etc.
- When correct pulse signal cannot be detected due to induction noise, etc.
- When the motor is forcefully accelerated (regenerative rotation) or decelerated (motor lock) due to large external force

Use the Inverter running (RUN) signal when releasing the brake from the motor with a brake. (The brake may not be released when the Output frequency detection (FU) signal is used.)

Do not turn OFF the external power supply for the encoder at the time of encoder feedback control. Correct encoder feedback control will not be possible.

| Parameters referred to | | | |
|---|---|---|---|
| Pr. 81 | Number of motor poles | => | page 5-55, page 5-66 |

## 5.16.14 Droop control Magnetic flux Sensorless Vector PM

This is a function to give droop characteristics to the speed by balancing the load in proportion with the load torque during the Advanced magnetic flux vector control, Real sensorless vector control, vector control, and PM sensorless vector control.

This is effective when balancing the load when using multiple inverters.

| Pr. | Name | Initial value | Setting range | Description | |
|---|---|---|---|---|---|
| 286<br>G400 | Droop gain | 0% | 0 | Normal operation | |
| | | | 0.1% to 100% | Droop control enabled<br>Set the droop amount at the time of rated torque as % value of the rated motor frequency. | |
| 287<br>G401 | Droop filter time constant | 0.3 s | 0 to 1 s | Set the filter time constant to apply to the current for torque. | |
| 288<br>G402 | Droop function activation selection | 0 | 0 | Without droop control during acceleration/ deceleration<br>(With 0 limit) | Rated motor frequency is the droop compensation reference |
| | | | 1 | Constantly droop control during operation<br>(With 0 limit) | |
| | | | 2 | Constantly droop control during operation<br>(Without 0 limit) | |
| | | | 10 | Without droop control during acceleration/ deceleration<br>(With 0 limit) | Motor speed is the droop compensation reference |
| | | | 11 | Constantly droop control during operation<br>(With 0 limit) | |
| 994<br>G403 | Droop break point gain | 9999 | 0.1 to 100% | Set the droop amount to be changed as % value of the rated motor frequency. | |
| | | | 9999 | No function | |
| 995<br>G404 | Droop break point torque | 100% | 0.1 to 100% | Set the torque when the droop amount is to be changed. | |

### Droop control

- Droop control is enabled for Advanced magnetic flux vector control, Real sensorless vector control, vector control, and PM sensorless vector control.
- Output frequency will change depending on the size of the current for torque with the droop control.
  Set % of the droop amount of rated torque with rated frequency (motor speed in case of Pr. 288 = "10, 11") as a reference for the droop gain.
- Upper limit of the droop compensation frequency is smaller frequency between 400 Hz and Pr. 1 "Maximum frequency".
- During PM sensorless vector control, the lowest frequency among 400 Hz, Pr. 1, and maximum motor frequency becomes the upper limit droop compensation frequency.

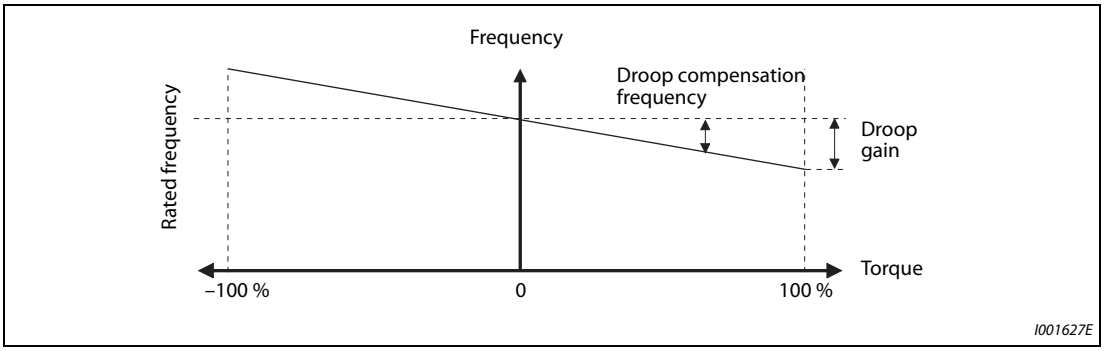


***Fig. 5-335:*** *Droop control*

- When Pr. 288 = "0 to 2" or Advanced magnetic flux control

$$\text{Droop compensation frequency} = \frac{\text{Current for torque after filtering}}{\text{Rated torque current}} \times \frac{\text{Rated motor frequency} \times \text{droop gain}}{100}$$

- When Pr. 288 = "10, 11"

$$\text{Droop compensation frequency} = \frac{\text{Current for torque after filtering}}{\text{Rated torque current}} \times \frac{\text{Motor speed} \times \text{droop gain}}{100}$$

**NOTE**

Setting of the droop gains should be approximately the rated slip of the motor.

$$\text{Rated slip} = \frac{\text{Synchronized speed at the time of base frequency} - \text{rated rotation speed}}{\text{Synchronized speed at the time of base frequency}} \times 100\ [\%]$$

**Limiting the frequency after the droop compensation (0 limit)**

By setting Pr. 288 at the time of Real sensorless vector control, vector control, or PM sensorless control, the negative frequency command when the frequency after droop compensation can be limited.

| Pr. 288 Setting | Operation | When the droop compensation frequency is negative | Droop compensation reference |
|---|---|---|---|
| 0 (initial value) | Without droop control during acceleration/deceleration | Limit with 0 Hz<br>(Limit with 0.5 Hz under Advanced magnetic flux vector control) | Rated motor frequency |
| 10 ① | | | Motor speed |
| 1 ① | Constantly droop control during operation | | Rated motor frequency |
| 11 ① | | | Motor speed |
| 2 ① | Constantly droop control during operation | Do not limit (reverse)<br>(At the time of vector control, PM sensorless vector control) | Rated motor frequency |
| | | Limit with 0 Hz<br>(At the time of Real sensorless vector control) | |

***Tab. 5-308:*** *Setting of parameter 288*

① During Advanced magnetic flux vector control, the action same as the "0" setting will be performed.

**Droop control break point setting (Pr. 994, Pr. 995)**

By setting Pr. 994 and Pr. 995, break point (1 point) can be set up for the droop compensation frequency. Setting a break point allows the inverter to raise the droop compensation frequency for light-load (no load) operation without raising it for heavy-load operation.

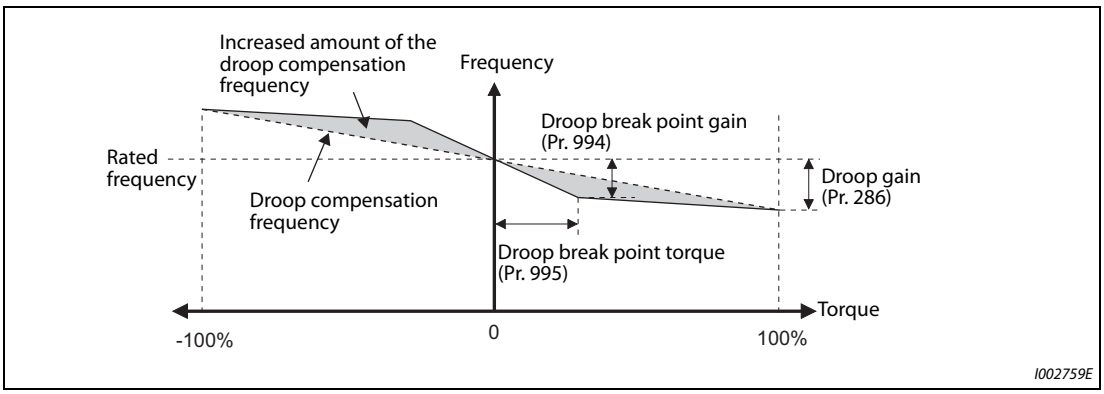


***Fig. 5-336:*** *Setting a break point for droop control*

**NOTE**

Droop break point function is disabled in one of following conditions:
(Linear compensation by Pr. 286 will be performed.)

- Pr. 995 = "100% (initial value)"
- Pr. 286 < Pr. 994
- Pr. 994 ≤ Pr. 995 × Pr. 286 / 100%

| Parameters referred to | | | |
|---|---|---|---|
| Pr. 1 | Maximum frequency | => | page 5-300 |

## 5.16.15 Speed smoothing control V/F Magnetic flux

There are times where the vibration due to mechanical resonance affect the inverter, making the output current (torque) unstable. In such case, vibration can be decreased by reducing the deviation in the output current (torque) by changing the output frequency.

| Pr. | Name | Initial value | Setting range | Description |
|---|---|---|---|---|
| 653<br>G410 | Speed smoothing control | 0% | 0 to 200% | Confirm the effect by raising and lowering the value with 100% as a reference. |
| 654<br>G411 | Speed smoothing cutoff frequency | 20 Hz | 0 to 120 Hz | Set the lower limit of the torque deviation cycle (frequency). |

### Control block diagram

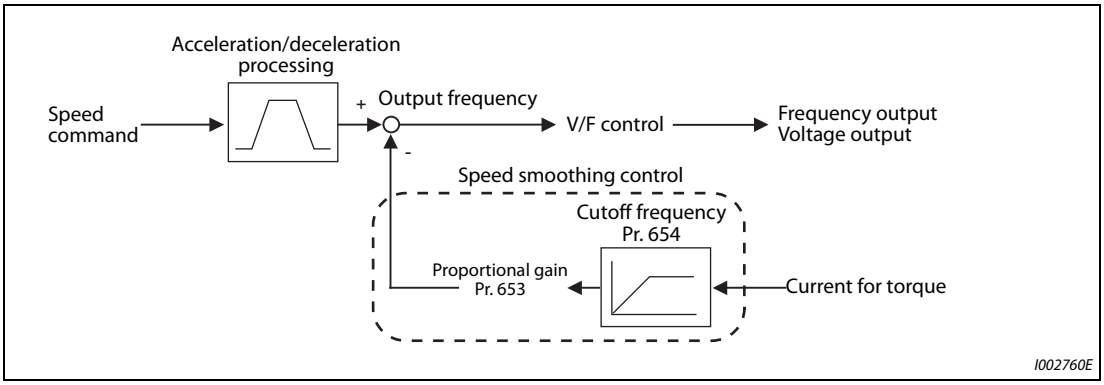


***Fig. 5-337:*** *Control block diagram*

### Setting method

- When vibration caused by mechanical resonance occurs, set Pr. 653 "Speed smoothing control" to 100%, and operate at the operation frequency with largest vibration, and confirm if the vibration is suppressed after few seconds.
- If there is no effect, gradually raise the setting value of Pr. 653, perform the operation and confirmation of the effect repeatedly, and use the value (Pr. 653) with most effect as the final setting value.
- If the vibration gets larger by raising Pr. 653, lower the value of Pr. 653 under 100%, and perform the confirmation of result in a same manner.
- When the vibration frequency (frequency of torque deviation, speed deviation, or converter output voltage deviation) by the mechanical resonance with a measurement device, etc., set the frequency of 1/2 to 1 times the vibration frequency in Pr. 654 "Speed smoothing cutoff frequency". (Setting vibrational frequency range can suppress the vibration better.)

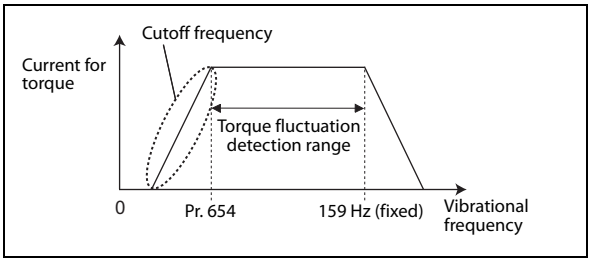


***Fig. 5-338:***
*Setting method*

**NOTE** Depending on the equipment, the vibration may not be suppressed sufficiently or the effect is not obtained.

# 5.17 Parameter clear / all parameter clear

**NOTES**

Set "1" to Pr.CLR "Parameter clear", ALL.CL "All parameter clear" to initialize all parameters. (Parameters cannot be cleared when Pr. 77 "Parameter write selection" = "1".)

Pr.CL does not clear calibration parameters or the terminal function selection parameters.

Refer to the parameter list on page A-5 for parameters cleared with this operation.

| Operation |
|---|
| ① Screen at power-ON<br>The monitor display appears. |
| ② Changing the operation mode<br>Press [PU/EXT] to choose the PU operation mode. [PU] indicator is lit. |
| ③ Parameter setting mode<br>Press [MODE] to choose the parameter setting mode. (The parameter number read previously appears.) |
| ④ Selecting the parameter number<br>To perform a parameter clear, turn to Pr.CLR, and to perform all parameter clear, turn it to ALL.CL and<br>press [SET]. "0" (initial value) appears. |
| ⑤ Parameter clear<br>Turn to change the set value to "1". Press [SET] to enter the setting. "1" and "Pr.CLR" (ALL.CL) flicker alternately after parameters are cleared.<br>• Turn to read another parameter.<br>• Press [SET] to show the setting again.<br>• Press [SET] twice to show the next parameter. |

***Tab. 5-309:*** *Parameter clear*

| Setting | Description | |
|---|---|---|
| | **Pr.CLR Parameter clear** | **ALL.CL All parameter clear** |
| 0 | Parameters are not cleared. | |
| 1 | Returns parameters excluding calibration parameters and terminal function selection parameters to their initial values. | Returns all parameters which can be cleared including calibration parameters and terminal function selection parameters to their initial values. |

***Tab. 5-310:*** *Parameter clear and all parameter clear*

**NOTES**

"1" and "Er4" are displayed alternately... Why?
The inverter is not in the PU operation mode.
① Press PU/EXT key.
PU is lit, and "1" appears on the monitor. (When Pr. 79 = "0" (initial value))
② Press SET key to clear the parameter.

Stop the inverter first. A writing error occurs if a parameter clear is attempted while the inverter is running.

To perform a parameter clear, the inverter must be in the PU operation mode even if "2" is set to Pr. 77.

For availability of parameter clear and all parameter clear for each parameter, refer to the parameter list on page A-5.

## 5.18 Copying and verifying parameters on the operation panel

| Pr.CPY setting value | Description |
|---|---|
| 0.--- | Initial display |
| 1.RD | Copy the source parameters to the operation panel. |
| 2.WR | Write the parameters copied to the operation panel to the destination inverter. |
| 3.VFY | Verify parameters in the inverter and operation panel. (Refer to page 5-679.) |

***Tab. 5-311:*** *Setting of parameter Pr.CPY*

**NOTES**

When the destination inverter is other than the FR-A800 series or when parameter copy is attempted after the parameter copy reading was stopped, "model error (r-E4)" appears.

Refer to the parameter list on page A-5 for the availability of parameter copy.

When the power is turned OFF or an operation panel is disconnected, etc. during parameter copy writing, write again or check the setting values by parameter verification.

When parameters are copied from a different-capacity inverter, there are parameters with different initial values depending on the inverter capacity, so the setting values of some parameters will be automatically changed. After performing a parameter copy from a different-capacity inverter, check all the parameter settings. (Refer to the parameter list (page 5-2) for details of parameters with different initial values depending on individual inverter capacity.)

If parameters are copied from an older inverter to a newer inverter that has additional parameters, out-of-range setting values may be written in some parameters. In that case, those parameters operate as if they were set to their initial values.

## 5.18.1 Parameter copy

Inverter parameter settings can be copied to other inverters.

### Reading the parameter settings of the inverter to the operation panel

| Operation |
|---|
| ① Connect the operation panel to the source inverter. |
| ② Parameter setting mode<br>Press MODE to choose the parameter setting mode. (The parameter number read previously appears.) |
| ③ Selecting the parameter number<br>Turn to Pr.CPY (parameter copy), and press SET.<br>"0.-- -- -- " appears. |
| ④ Reading to operation panel<br>Turn to change the set value to " 1.Rd ". Press SET to start reading of the inverter parameter settings by the operation panel. (It takes about 30 seconds to read all the settings. During reading, " 1.Rd " flickers.) |
| ⑤ End reading<br>" 1.Rd " and "Pr.CPY " flicker alternately after settings are read. |

***Tab. 5-312:*** *Reading the parameter settings of the inverter to the operation panel*

**NOTE**

rE 1 appears... Why?
Parameter read error. Perform the operation from step ③ again.

### Copying parameter settings read to the operation panel to the inverter

| Operation |
|---|
| ① Connect the operation panel to the destination inverter. |
| ② Parameter setting mode<br>Press MODE to choose the parameter setting mode. (The parameter number read previously appears.) |
| ③ Selecting the parameter number<br>Turn to Pr.CPY (parameter copy), and press SET.<br>"0.-- -- -- " appears. |
| ④ Selecting parameter copy<br>Turn to change the setting value to "2.WR " and press SET.<br>2. ALL appears. |
| ⑤ Copying to the inverter<br>Press SET to start copying to the inverter. (It takes about 60 seconds to copy all the settings. During copying, the selected parameter group flickers.)<br>Perform this step while the inverter is stopped. (Parameter settings cannot be copied during operation.) |
| ⑥ Ending copying<br>"2.WR " and "Pr.CPY " flicker alternately after copying ends. |
| ⑦ When parameters are written to the destination inverter, reset the inverter before operation by, for example, turning the power supply OFF. |

***Tab. 5-313:*** *Copying parameter settings read to the operation panel to the inverter*

**NOTES**

- rE2 appears... Why?
  Parameter write error. Perform the operation from step ③ again.
- CP and 0.00 are displayed alternately.
  Appears when parameter copy is performed between inverters FR-A820-03160(55K) or lower or inverters FR-A840-01800(55K) or lower and inverters FR-A820-03800(75K) or higher or FR-A840-02160(75K) or higher.
  ① When CP and 0.00 flicker alternately, set the Pr. 989 "Parameter copy alarm release" as shown below (initial value):

| Pr. 989 setting | Operation |
|---|---|
| 10 | Cancels the alarm of FR-A820-03160(55K) or lower and FR-A840-01800(55K) or lower. |
| 100 | Cancels the alarm of FR-A820-03800(75K) or higher and FR-A840-02160(75K) or higher. |

  ② After setting Pr. 989, perform setting of Pr. 9, Pr. 30, Pr. 51, Pr. 56, Pr. 57, Pr. 61, Pr. 70, Pr. 72, Pr. 80, Pr. 82, Pr. 90 to Pr. 94, Pr. 453, Pr. 455, Pr. 458 to Pr. 462, Pr. 557, Pr. 859, Pr. 860, and Pr. 893 again.

## 5.18.2 Parameter verification

Whether the parameter settings of inverters are the same or not can be checked.

| Operation |
|---|
| ① Copy the parameter settings of the verification source inverter to operation panel according to the procedure on page 5-678. |
| ② Move the operation panel to the inverter to be verified. |
| ③ Screen at power-ON<br>The monitor display appears. |
| ④ Parameter setting mode<br>Press MODE to choose the parameter setting mode. (The parameter number read previously appears.) |
| ⑤ Selecting the parameter number<br>Turn to PrCPY (parameter copy). Press SET. "0.- - - - " appears. |
| ⑥ Parameter verification<br>Turn to change to setting value " 3VFY " (parameter copy verification mode).<br>Press SET. Verification of the parameter settings copied to the operation panel and the parameter settings of the verification destination inverter is started. (It takes about 60 seconds to verify all the settings. During verification, " 3VFY " flickers.)<br>• If there are different parameters, the different parameter number and " rE3 " flicker.<br>• To continue verification, press SET. |
| ⑦ " PrCPY " and " 3VFY " flicker alternately after verification ends. |

***Tab. 5-314:*** *Parameter verification*

**NOTE**

rE3 flickers... Why?
The set frequency may be incorrect. To continue verification, press SET key.

# 5.19 Copying and verifying parameters using USB memory

- Inverter parameter settings can be copied to USB memory.
- Parameter setting data copied to USB memory can be copied to other inverters or verified to see if they differ from the parameter settings of other inverters.
- Parameter settings can also be imported to a personal computer and edited in FR Configurator2.

### Changes in USB memory copy operation states

Insert the USB memory in the inverter. The USB memory mode is displayed and USB memory operations are possible.

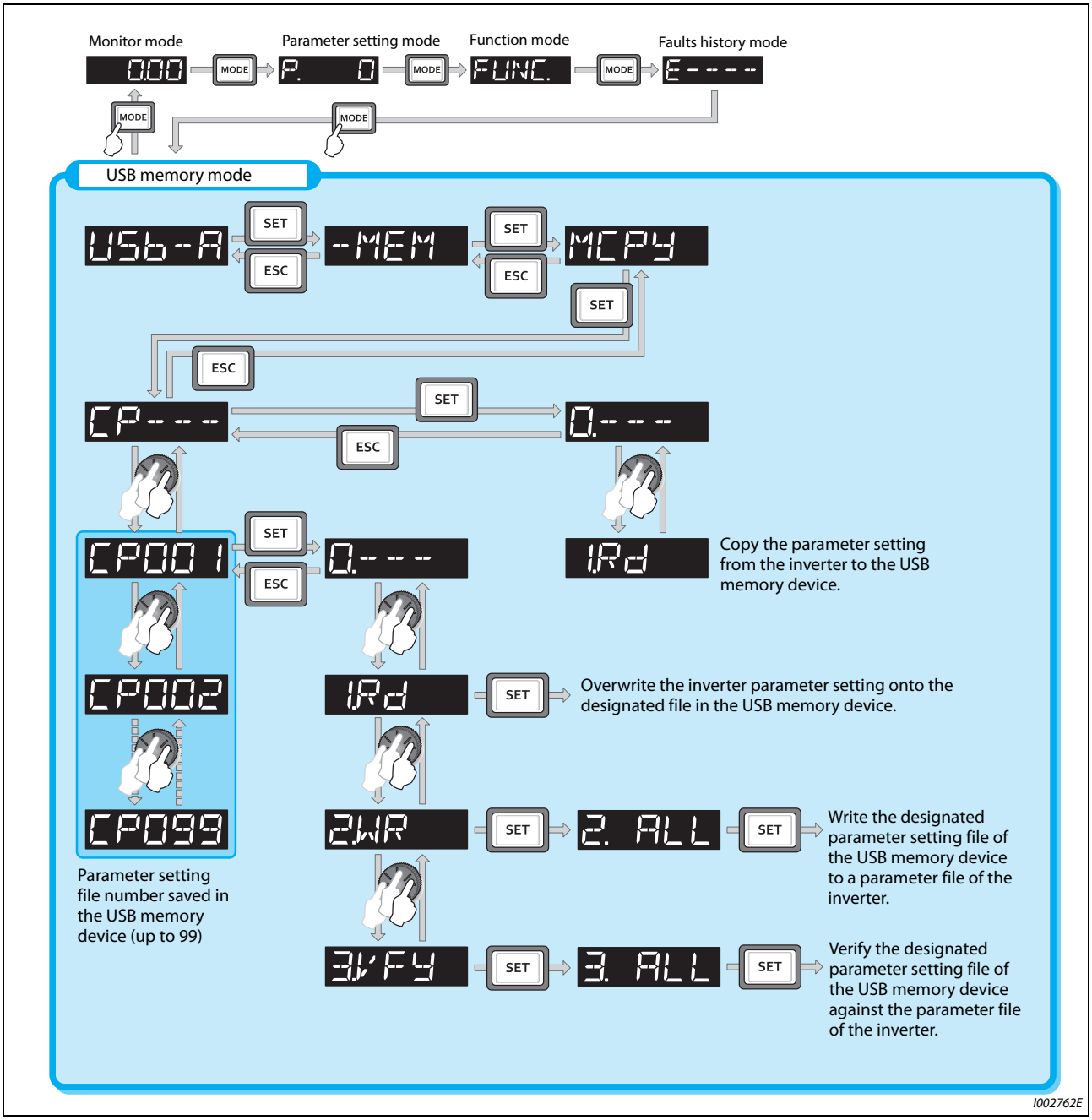


***Fig. 5-339:*** *Changes in USB memory copy operation states*

**NOTES**

When parameter settings are copied to USB memory without specifying a parameter setting file number in USB memory, numbers are automatically assigned.

Up to 99 files can be saved on USB memory. When the USB memory device already has 99 files, attempting copying of another file to the USB memory device causes the file quantity error (rE7).

Refer to the FR Configurator2 instruction manual for details on importing files to FR Configurator2.

### Procedure for copying parameters to USB memory

| Operation |
|---|
| ① Insert the USB memory into the copy source inverter. |
| ② USB memory mode<br>Press MODE to change to the USB memory mode. |
| ③ Displaying the file selection screen<br>Press SET three times to display CP-- -- -- (file selection screen) and press SET. (To overwrite files on USB memory, display the file selection screen, turn ⊛ to select the file number, and press SET.) |
| ④ Copying to USB memory<br>Turn ⊛ to change to " IRd ". Press SET to copy the parameter settings at the copy source to USB memory.<br>(It takes about 15 seconds to copy all the settings. During copying, " IRd " flickers.)<br>" IRd " and "file number when the parameter file was copied to USB memory" flicker after copying ends. |

***Tab. 5-315:*** *Copying parameters to USB memory*

### Procedure for copying parameters from USB memory to inverter

| | Operation |
|---|---|
| ① | Insert the USB memory into the destination inverter. |
| ② | USB memory mode<br>Press MODE to change to the USB memory mode. |
| ③ | Displaying the file selection screen<br>Press SET three times to display CP-- -- -- (file selection screen). |
| ④ | Selecting the file number<br>Turn to select the file number to copy to the inverter, and press SET. |
| ⑤ | Turn to display "2.WR " and press SET.<br>"2. ALL " appears. |
| ⑥ | Writing to the inverter<br>Press SET to write the parameters copied to the USB memory to the destination inverter. (It takes about 15 seconds to copy all the settings. During copying, "2. ALL " flickers.)<br>"2. ALL " and "copied file number" flicker after copying ends.<br>Perform this step while the inverter is stopped. |
| ⑦ | When parameters are written to the destination inverter, reset the inverter before operation by, for example, turning the power supply OFF. |

***Tab. 5-316:*** *Copying parameters from USB memory*

**NOTES**

- rE1, rE2 appears... Why?
  A fault occurred on USB memory. Check the USB memory connection, then retry.
- CP and 0.00 are displayed alternately.
  Appears when parameter copy is performed between inverters FR-A820-03160(55K) or lower or inverters FR-A840-01800(55K) or lower and inverters FR-A820-03800(75K) or higher or FR-A840-02160(75K) or higher.
  ① When CP and 0.00 flicker alternately, set the Pr. 989 "Parameter copy alarm release" as shown below (initial value):

| Pr. 989 setting | Operation |
|---|---|
| 10 | Cancels the alarm of FR-A820-03160(55K) or lower and FR-A840-01800(55K) or lower. |
| 100 | Cancels the alarm of FR-A820-03800(75K) or higher and FR-A840-02160(75K) or higher. |

  ② After setting Pr. 989, perform setting of Pr. 9, Pr. 30, Pr. 51, Pr. 56, Pr. 57, Pr. 61, Pr. 70, Pr. 72, Pr. 80, Pr. 82, Pr. 90 to Pr. 94, Pr. 453, Pr. 455, Pr. 458 to Pr. 462, Pr. 557, Pr. 859, Pr. 860, and Pr. 893 again.

When the destination inverter is other than the FR-A800 series or when parameter copy is attempted after the parameter copy reading was stopped, "model error (rE4)" appears.

Refer to the parameter list on page A-5 for the availability of parameter copy.

When the power is turned OFF or an operation panel is disconnected, etc. during parameter copy writing, write again or check the setting values by parameter verification.

When parameters are copied from a different-capacity inverter, there are parameters with different initial values depending on the inverter capacity, so the setting values of some parameters will be automatically changed. After performing a parameter copy from a different-capacity inverter, check all the parameter settings. (Refer to the parameter list (page 5-2) for details of parameters with different initial values depending on individual inverter capacity.)

### Procedure for verifying parameters in USB memory

| | Operation |
|---|---|
| ① | Copy the parameter settings of the verification source inverter to USB memory according to the procedure on page 5-681. |
| ② | Move the USB memory to the inverter to be verified. |
| ③ | Screen at power-ON<br>The monitor display appears. |
| ④ | USB memory mode<br>Press MODE to change to the USB memory mode. |
| ⑤ | Displaying the file selection screen<br>Press SET three times to display CP-----  (file selection screen). |
| ⑥ | Selecting the file number<br>Turn to select the file number to be verified, and press SET. |
| ⑦ | Parameter verification<br>Turn to display the setting " 3.VFY " (parameter copy verification mode) and press SET.<br>3. ALL appears.<br>Press SET. Verification of the parameter settings copied to the USB memory and the parameter settings of the verification destination inverter is started. (It takes about 15 seconds to verify all the settings. During verification, " 3. ALL " flickers.)<br>If there are different parameters, the different parameter number and " r-E3 " flicker.<br>To continue verification, press SET. |
| ⑧ | "Verified file number" and " 3. ALL " flicker after verification ends. |

***Tab. 5-317:*** *Verifying parameters in USB memory*

**NOTE**

r-E3 flickers... Why?
The set frequency may be incorrect. To continue verification, press the SET key.

# 5.20 Checking parameters changed from their initial values (Initial value change list)

Parameters changed from their initial values can be displayed.

| Operation |
|---|
| ① Screen at power-ON<br>The monitor display appears. |
| ② Parameter setting mode<br>Press [MODE] to choose the parameter setting mode. (The parameter number read previously appears.) |
| ③ Selecting the parameter number<br>Turn ⊛ to Pr-CHG (Initial value change list) and press [SET].<br>"P.-- -- -- -- " appears. |
| ④ Checking the initial value change list<br>Turn ⊛. The parameter numbers that have been changed from their initial value appear in order.<br>If [SET] is pressed with parameters that have been changed, the parameter settings can be changed as they are. (Parameter numbers are no longer displayed in the list when they are returned to their initial values.)<br>Other changed parameters appear by turning ⊛.<br>"P.-- -- -- -- " is returned to when the last changed parameter is displayed. |

***Tab. 5-318:*** *Initial value change list*

**NOTES**

Calibration parameters (C0 (Pr. 900) to C7 (Pr. 905), C42 (Pr. 934) to C45 (Pr. 935)) are not displayed even when these are changed from the initial settings.

Only the simple mode parameters are displayed when the simple mode is set (Pr. 160 = "9999 (initial value)").

Only user groups are displayed when user groups are set (Pr. 160 = "1").

Pr. 160 is displayed independently of whether the setting value is changed or not.

Parameter setting using the initial value change list is also possible.

# 6 Protective functions

## 6.1 Inverter fault and alarm indications

- When the inverter detects a fault, depending on the nature of the fault, the operation panel displays an error message or warning, or a protective function activates to trip the inverter.
- When any fault occurs, take an appropriate corrective action, then reset the inverter, and resume the operation.
  Restarting the operation without a reset may break or damage the inverter.
- When a protective function activates, note the following points.

| Item | Description |
|---|---|
| Fault output signal | Opening the magnetic contactor (MC) provided on the input side of the inverter at a fault occurrence shuts off the control power to the inverter, therefore, the fault output will not be retained. |
| Fault or alarm indication | When a protective function activates, the operation panel displays a fault indication. |
| Operation restart method | While a protective function is activated, the inverter output is kept shutoff. Reset the inverter to restart the operation. |

***Tab. 6-1:*** *Behaviour when a protective function is activated*

- Inverter fault or alarm indications are categorized as below.

| Displayed item | Description |
|---|---|
| Error message | A message regarding an operational fault and setting fault by the operation panel (FR-DU08) and parameter unit (FR-PU07). The inverter does not trip. |
| Warning | The inverter does not trip even when a warning. However, failure to take appropriate measures will lead to a fault. |
| Alarm | The inverter does not trip. An Alarm (LF) signal can also be output with a parameter setting. |
| Fault | A protective function activates to trip the inverter and output a Fault (ALM) signal. |

***Tab. 6-2:*** *Categories of faults and alarms*

**NOTE**

The past eight faults can be displayed on the operation panel. (Faults history)
(For the operation, refer to page 6-3.)

## 6.2 Reset method for the protective functions

Reset the inverter by performing any of the following operations. Note that the accumulated heat value of the electronic thermal relay function and the number of retries are cleared (erased) by resetting the inverter.

The inverter recovers about 1 s after the reset is released.

- On the operation panel, press STOP/RESET key to reset the inverter.
  (This may only be performed when a fault occurs. Refer to page 6-18 of the Instruction Manual for faults.)

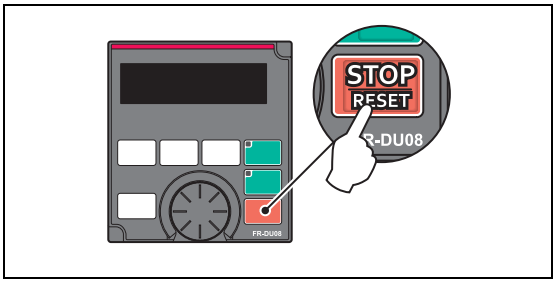


***Fig. 6-1:***
*Resetting the inverter by using the operation panel*

I002451E

- Switch the power OFF once, then switch it ON again.

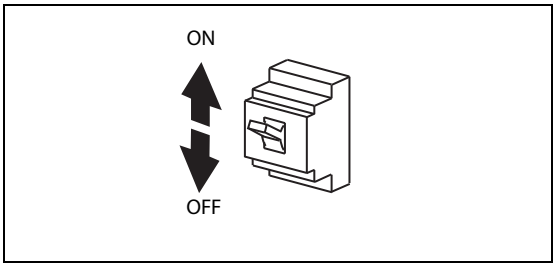


***Fig. 6-2:***
*Resetting the inverter by switching the power supply off and on*

I001297E

- Turn ON the reset signal (RES) for 0.1 s or more. (If the RES signal is kept ON, "Err" appears (flickers) to indicate that the inverter is in a reset status.)

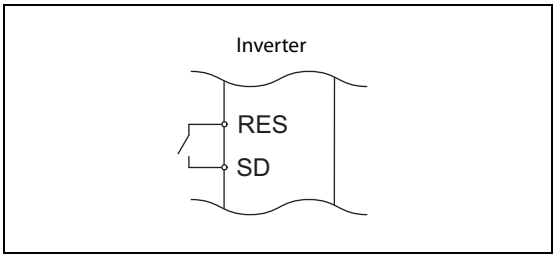


***Fig. 6-3:***
*Resetting the inverter by turning on the RES signal*

I002452E

**NOTE**

OFF status of the start signal must be confirmed before resetting the inverter fault. Resetting an inverter fault with the start signal ON restarts the motor suddenly.

# 6.3 Check and clear of the faults history

The operation panel stores the fault indications which appears when a protective function is activated to display the fault record for the past eight faults. (Faults history)

## 6.3.1 Check for the faults history

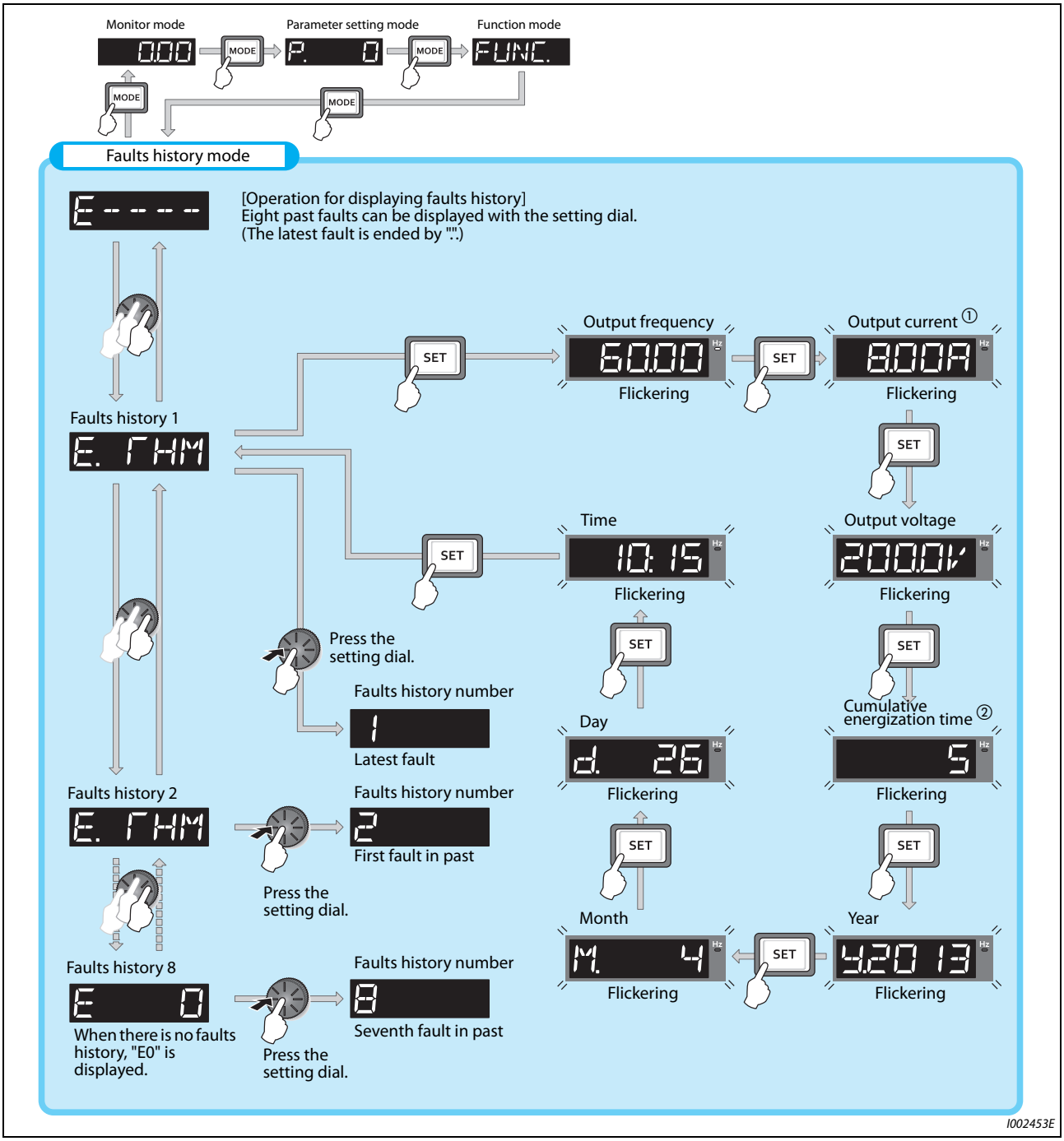


***Fig. 6-4:*** *Displaying the alarm list and the status values for the time of the alarm*

① When an overcurrent trip occurs by an instantaneous overcurrent, the monitored current value saved in the faults history may be lower than the actual current that has flowed.

② The cumulative energization time and actual operation time are accumulated from 0 to 65535 hours, then cleared, and accumulated again from 0.

## 6.3.2 Faults history clearing procedure

**NOTE** Set Err.CL Fault history clear = "1" to clear the faults history.

| Operation |
|---|
| ① Screen at power-ON<br>The monitor display appears. |
| ② Parameter setting mode<br>Press MODE to choose the parameter setting mode. (The parameter number read previously appears.) |
| ③ Selecting the parameter number<br>Turn ⊛ until Err.CL (faults history clear) appears.<br>Press SET to read the present set value. "0" (initial value) appears. |
| ④ Faults history clear<br>Turn ⊛ to change the set value to "1". Press SET to start clear.<br>"1" and "Err.CL" flicker alternately after parameters are cleared.<br>• Turn ⊛ to read another parameter.<br>• Press SET to show the setting again.<br>• Press SET twice to show the next parameter. |

***Tab. 6-3:*** *Clearing the faults history*

# 6.4 The list of fault displays

If the displayed message does not correspond to any of the following or if you have any other problem, please contact your sales representative.

### Error message

A message regarding operational fault and setting fault by the operation panel (FR-DU08) and parameter unit (FR-PU07) is displayed. The inverter does not trip.

| Operation panel indication | | Name | Refer to page |
|---|---|---|---|
| E----- | E--- | Faults history | 6-3 |
| HOLd | HOLD | Operation panel lock | 6-9 |
| LOCd | LOCD | Password locked | 6-9 |
| Er 1 to Er4<br>Er8 | Er1 to Er4,<br>Er8 | Parameter write error | 6-9 |
| rE 1 to rE4<br>rE6 to rE8 | rE1 to rE4<br>rE6 to rE8 | Copy operation error | 6-10 |
| Err. | Err. | Error | 6-12 |

***Tab. 6-4:*** *Error message*

### Warning

The inverter does not trip even when a warning is displayed. However, failure to take appropriate measures will lead to a fault.

| Operation panel indication | | Name | Refer to page |
|---|---|---|---|
| OL | OL | Stall prevention (overcurrent) | 6-13 |
| oL | oL | Stall prevention (overvoltage) | 6-14 |
| Rb | Rb | Regenerative brake pre-alarm | 6-14 |
| TH | TH | Electronic thermal relay function pre-alarm | 6-14 |
| PS | PS | PU stop | 6-14 |
| SL | SL | Speed limit indication | 6-15 |
| CP | CP | Parameter copy | 6-15 |
| SA | SA | Safety stop | 6-15 |
| MT 1 to MT3 | MT1 to MT3 | Maintenance signal output | 6-16 |
| UF | UF | USB host error | 6-16 |
| HP 1 | HP1 | Home position return setting error | 6-16 |
| HP2 | HP2 | Home position return uncompleted | 6-16 |
| HP3 | HP3 | Home position return parameter setting error | 6-16 |
| EV | EV | 24 V external power supply operation | 6-16 |

***Tab. 6-5:*** *Warning*

### Alarm

The inverter does not trip. An Alarm (LF) signal can also be output with a parameter setting.

| Operation panel indication | | Name | Data code | Refer to page |
|---|---|---|---|---|
| FN | FN | Fan alarm | — | 6-17 |
| FN2 | FN2 | Internal fan alarm | — | 6-17 |

***Tab. 6-6:*** *Alarm*

### Fault

- A protective function trips the inverter and outputs a Fault (ALM) signal.
- The data code is used for checking the fault detail via communication or with Pr. 997 "Fault initiation".

| Operation panel indication | | Name | Data code | Refer to page |
|---|---|---|---|---|
| E. OC 1 | E.OC1 | Overcurrent trip during acceleration | 16 (H10) | 6-18 |
| E. OC2 | E.OC2 | Overcurrent trip during constant speed | 17 (H11) | 6-19 |
| E. OC3 | E.OC3 | Overcurrent trip during deceleration or stop | 18 (H12) | 6-20 |
| E. OV 1 | E.OV1 | Regenerative overvoltage trip during acceleration | 32 (H20) | 6-20 |
| E. OV2 | E.OV2 | Regenerative overvoltage trip during constant speed | 33 (H21) | 6-21 |
| E. OV3 | E.OV3 | Regenerative overvoltage trip during deceleration or stop | 34 (H22) | 6-21 |
| E. THT | E.THT | Inverter overload trip (electronic thermal relay function) | 48 (H30) | 6-22 |
| E. THM | E.THM | Motor overload trip (electronic thermal relay function) | 49 (H31) | 6-22 |
| E. FI N | E.FIN | Heatsink overheat | 64 (H40) | 6-22 |
| E. I PF | E.IPF | Instantaneous power failure | 80 (H50) | 6-23 |
| E. UVT | E.UVT | Undervoltage | 81 (H51) | 6-23 |
| E. I LF | E.ILF | Input phase loss | 82 (H52) | 6-23 |
| E. OLT | E.OLT | Stall prevention stop | 96 (H60) | 6-24 |
| E. SOT | E. SOT | Loss of synchronism detection | 97 (H61) | 6-24 |
| E. bE | E.BE | Brake transistor alarm detection | 112 (H70) | 6-25 |
| E. GF | E.GF | Output side earth (ground) fault overcurrent | 128 (H80) | 6-25 |
| E. LF | E.LF | Output phase loss | 129 (H81) | 6-25 |
| E. OHT | E.OHT | External thermal relay operation | 144 (H90) | 6-25 |

***Tab. 6-7:*** *Fault (1)*

| Operation panel indication | | Name | Data code | Refer to page |
|---|---|---|---|---|
| E. PTC | E.PTC | PTC thermistor operation | 145 (H91) | 6-26 |
| E. OPT | E.OPT | Option fault | 160 (HA0) | 6-26 |
| E. OP1 | E.OP1 | Communication option fault | 161 (HA1) | 6-26 |
| E. 16 | E.16 | User definition error by the PLC function | 164 (HA4) | 6-27 |
| E. 17 | E.17 | | 165 (HA5) | |
| E. 18 | E.18 | | 166 (HA6) | |
| E. 19 | E.19 | | 167 (HA7) | |
| E. 20 | E.20 | | 168 (HA8) | |
| E. PE | E.PE | Parameter storage device fault | 176 (HB0) | 6-27 |
| E. PUE | E.PUE | PU disconnection | 177 (HB1) | 6-27 |
| E. RET | E.RET | Retry count excess | 178 (HB2) | 6-27 |
| E. PE2 | E.PE2 | Parameter storage device fault | 179 (HB3) | 6-28 |
| E. CPU | E.CPU | CPU fault | 192 (HC0) | 6-28 |
| E. 5 | E. 5 | | 245 (HF5) | |
| E. 6 | E. 6 | | 246 (HF6) | |
| E. 7 | E. 7 | | 247 (HF7) | |
| E. CTE | E.CTE | Operation panel power supply short circuit/ RS-485 terminal power supply short circuit | 193 (HC1) | 6-28 |
| E. P24 | E.P24 | 24 V DC power fault | 194 (HC2) | 6-28 |
| E. CdO | E.CDO | Abnormal output current detection | 196 (HC4) | 6-29 |
| E. IOH | E.IOH | Inrush current limit circuit fault | 197 (HC5) | 6-29 |
| E. SER | E.SER | Communication fault (inverter) | 198 (HC6) | 6-29 |
| E. AIE | E.AIE | Analog input fault | 199 (HC7) | 6-29 |
| E. USb | E.USB | USB communication fault | 200 (HC8) | 6-30 |
| E. SAF | E.SAF | Safety circuit fault | 201 (HC9) | 6-30 |
| E. PbT | E.PBT | Internal circuit fault | 202 (HCA) | 6-30 |
| E. 13 | E.13 | | 253 (HFD) | |
| E. OS | E.OS | Overspeed occurrence | 208 (HD0) | 6-30 |
| E. OSd | E.OSD | Speed deviation excess detection | 209 (HD1) | 6-31 |

***Tab. 6-7:*** *Fault (2)*

| Operation panel indication | | Name | Data code | Refer to page |
|---|---|---|---|---|
| E. ECT | E.ECT | Signal loss detection | 210 (HD2) | 6-31 |
| E. Od | E.OD | Excessive position fault | 211 (HD3) | 6-32 |
| E. Mb 1 | E.MB1 | Brake sequence fault | 213 (HD5) | 6-32 |
| E. Mb2 | E.MB2 | | 214 (HD6) | |
| E. Mb3 | E.MB3 | | 215 (HD7) | |
| E. Mb4 | E.MB4 | | 216 (HD8) | |
| E. Mb5 | E.MB5 | | 217 (HD9) | |
| E. Mb6 | E.MB6 | | 218 (HDA) | |
| E. Mb7 | E.MB7 | | 219 (HDB) | |
| E. EP | E.EP | Encoder phase fault | 220 (HDC) | 6-32 |
| E. I AH | E.IAH | Abnormal internal temperature | 225 (HE1) | 6-32 |
| E. LCI | E-LCI | 4 mA input fault | 228 (HE4) | 6-33 |
| E. PCH | E.PCH | Pre-charge fault | 229 (HE5) | 6-33 |
| E. PI d | E.PID | PID signal fault | 230 (HE6) | 6-33 |
| E. 1 | E. 1 | Option fault | 241 (HF1) | 6-34 |
| E. 2 | E. 2 | | 242 (HF2) | |
| E. 3 | E. 3 | | 243 (HF3) | |
| E. 11 | E.11 | Opposite rotation deceleration fault | 251 (HFB) | 6-34 |

***Tab. 6-7:*** *Fault (3)*

If faults other than the above appear, contact your sales representative.

# 6.5 Causes and corrective actions

## 6.5.1 Error message

A message regarding operational troubles is displayed. Output is not shut off.

| | | |
|---|---|---|
| **Operation panel indication** | **HOLD** | HOLd |
| **Name** | Operation panel lock | |
| **Description** | Operation lock is set. Operation other than STOP/RESET key is invalid. (Refer to page 5-190.) | |
| **Check point** | — | |
| **Corrective action** | Press MODE key for 2 s to release the lock. | |

| | | |
|---|---|---|
| **Operation panel indication** | **LOCD** | LOCd |
| **Name** | Password locked | |
| **Description** | Password function is active. Display and setting of parameters are restricted. | |
| **Check point** | — | |
| **Corrective action** | Enter the password in Pr. 297 "Password lock/unlock" to unlock the password function before operating. (Refer to page 5-203.) | |

| | | |
|---|---|---|
| **Operation panel indication** | **Er1** | Er 1 |
| **Name** | Parameter write error | |
| **Description** | • Parameter setting was attempted while Pr. 77 "Parameter write selection" is set to disable parameter write.<br>• Overlapping range has been set for the frequency jump.<br>• Overlapping range has been set for the adjustable 5 points V/F.<br>• The PU and inverter cannot make normal communication.<br>• IPM parameter initialization was attempted while Pr. 72 = "25". | |
| **Check point** | • Check the Pr. 77 "Parameter write selection" setting. (Refer to page 5-195.)<br>• Check the settings of Pr. 31 to Pr. 36 (frequency jump). (Refer to page 5-302.)<br>• Check the settings of Pr. 100 to Pr. 109 (adjustable 5 points V/F). (Refer to page 5-638.)<br>• Check the connection of PU and the inverter.<br>• Check the Pr. 72 "PWM frequency selection" setting. A sine wave filter cannot be used under PM sensorless vector control. | |

| | | |
|---|---|---|
| **Operation panel indication** | **Er2** | Er2 |
| **Name** | Write error during operation | |
| **Description** | Parameter write was attempted while Pr. 77 = "0". | |
| **Check point** | • Check that the inverter is stopped. | |
| **Corrective action** | • After stopping the operation, make parameter setting.<br>• When setting Pr. 77 = "2", parameter write is enabled during operation. (Refer to page 5-195.) | |

| | | |
|---|---|---|
| **Operation panel indication** | **Er3** | Er3 |
| **Name** | Calibration error | |
| **Description** | Analog input bias and gain calibration values have been set too close. | |
| **Check point** | Check the settings of calibration parameters C3, C4, C6 and C7 (calibration functions).<br>(Refer to page 5-388.) | |

| | | |
|---|---|---|
| **Operation panel indication** | **Er4** | Er4 |
| **Name** | Mode designation error | |
| **Description** | • Parameter setting was attempted in the External or NET operation mode while Pr. 77 = "1".<br>• Parameter write was attempted when the command source is not at the operation panel (FR-DU08). | |
| **Check point** | • Check that operation mode is PU operation mode.<br>• Check that the Pr. 551 setting is correct. | |
| **Corrective action** | • After setting the operation mode to the "PU operation mode", make parameter setting. (Refer to page 5-255.)<br>• When Pr. 77 = "2", parameter write is enabled regardless of the operation mode. (Refer to page 5-195.)<br>• Set Pr. 551 = "2". (Refer to page 5-266.) | |

| | | |
|---|---|---|
| **Operation panel indication** | **Er8** | Er8 |
| **Name** | USB memory device operation error | |
| **Description** | • An operation command was given during the USB memory device operation.<br>• A copy operation (writing) was performed while the PLC function was in the RUN state.<br>• A copy operation was attempted for a password locked project. | |
| **Check point** | • Check if the USB memory device is operating.<br>• Check if the PLC function is in the RUN state.<br>• Check if the project data is locked with a password. | |
| **Corrective action** | • Perform the operation after the USB memory device operation is completed.<br>• Stop the PLC function. (Refer to page 5-568 and the FR-A800 PLC function programming manual.)<br>• Unlock the password of the project data using FR Configurator2. (Refer to the Instruction Manuals of FR Configurator2 and GX Works2.) | |

| | | |
|---|---|---|
| **Operation panel indication** | **rE1** | rE1 |
| **Name** | Parameter read error | |
| **Description** | • A failure has occurred at the operation panel side EEPROM while reading the copied parameters.<br>• A failure has occurred in the USB memory device while copying the parameters or reading the PLC function project data. | |
| **Check point** | — | |
| **Corrective action** | • Perform parameter copy again. (Refer to page 5-678, page 5-680.)<br>• Perform PLC function project data copy again. (Refer to page 5-568)<br>• The USB memory device may be faulty. Replace the USB memory device.<br>• The operation panel (FR-DU08) may be faulty. Please contact your sales representative. | |

| Operation panel indication | rE2 | rE2 |
|---|---|---|
| Name | Parameter write error | |
| Description | • Parameter copy from the operation panel to the inverter was attempted during operation.<br>• A failure has occurred at the operation panel side EEPROM while writing the copied parameters.<br>• A failure has occurred in the USB memory device while writing the copied parameters or PLC function project data. | |
| Check point | • Check that the inverter is stopped. | |
| Corrective action | • After stopping the operation, perform parameter copy again. (Refer to page 5-678.)<br>• The operation panel (FR-DU08) may be faulty. Please contact your sales representative.<br>• Perform parameter copy or PLC project data copy again.<br>(Refer to page 5-568 and page 5-680)<br>• The USB memory device may be faulty. Replace the USB memory device. | |

| Operation panel indication | rE3 | rE3 |
|---|---|---|
| Name | Parameter verification error | |
| Description | • The data in the inverter are different from the data in the operation panel.<br>• A failure has occurred at the operation panel side EEPROM during parameter verification.<br>• A failure has occurred in the USB memory device during parameter verification.<br>• The data in the inverter are different from the data in the USB memory device or the personal computer (FR Configurator2) | |
| Check point | • Check the parameter setting of the source inverter against the setting of the destination inverter. | |
| Corrective action | • Continue the verification by pressing SET key.<br>Perform parameter verification again. (Refer to page 5-679.)<br>• The operation panel (FR-DU08) may be faulty. Please contact your sales representative.<br>• The USB memory device may be faulty. Replace the USB memory device.<br>• Verify the PLC function project data again. (Refer to page 5-568.) | |

| Operation panel indication | rE4 | rE4 |
|---|---|---|
| Name | Model error | |
| Description | • A different model was used when parameter copy from the operation panel or parameter verification was performed.<br>• The data in the operation panel were not correct when parameter copy from the operation panel or parameter verification was performed. | |
| Check point | • Check that the parameter copy or verification source inverter is of the same model.<br>• Check that parameter copy to the operation panel was not interrupted by switching OFF the power or by disconnecting the operation panel. | |
| Corrective action | • Perform parameter copy and parameter verification between inverters of the same model (FR-A800 series).<br>• Perform parameter copy to the operation panel from the inverter again. | |

| | | |
|---|---|---|
| **Operation panel indication** | **rE6** | rE6 |
| **Name** | File error | |
| **Description** | • The parameter copy file in the USB memory device cannot be recognized.<br>• An error has occurred in the file system during transfer of the PLC function data or writing to RAM. | |
| **Check point** | — | |
| **Corrective action** | • Perform parameter copy again.(Refer to page 5-680.)<br>• Copy the PLC function project data again.(Refer to page 5-568.) | |

| | | |
|---|---|---|
| **Operation panel indication** | **rE7** | rE7 |
| **Name** | File quantity error | |
| **Description** | • A parameter copy was attempted to the USB memory device in which the copy files from 001 to 099 had already been saved. | |
| **Check point** | • Check if the number of copy files in the USB memory device has reached 99. | |
| **Corrective action** | • Delete the copy file in the USB memory device and perform parameter copy again.(Refer to page 5-680.) | |

| | | |
|---|---|---|
| **Operation panel indication** | **rE8** | rE8 |
| **Name** | No PLC function project file | |
| **Description** | The specified PLC function project file does not exist in the USB memory device. | |
| **Check point** | • Check that the file exists in the USB memory device.<br>• Check that the folder name and the file name in the USB memory device is correct. | |
| **Corrective action** | The data in the USB memory device may be damaged. | |

| | | |
|---|---|---|
| **Operation panel indication** | **Err.** | Err. |
| **Name** | Error | |
| **Description** | • The RES signal is turned ON.<br>• The operation panel and inverter cannot make normal communication (contact faults of the connector).<br>• This error may occur when the voltage at the input side of the inverter drops.<br>• When using a separate power source for the control circuit power (R1/L11, S1/L21) from the main circuit power (R/L1, S/L2, T/L3), this error may appear at turning ON of the main circuit. It is not a fault. | |
| **Corrective action** | • Turn OFF the RES signal.<br>• Check the connection between the operation panel and the inverter.<br>• Check the voltage on the input side of the inverter. | |

## 6.5.2 Warning

Output is not shut off when a protective function activates.

| | | | | |
|---|---|---|---|---|
| **Operation panel indication** | **OL** | OL | **FR-PU07** | **OL** |
| **Name** | Stall prevention (overcurrent) | | | |
| **Description** | • When the output current of the inverter increases, the stall prevention (overcurrent) function activates.<br>• The following section explains about the stall prevention (overcurrent) function. | | | |
| | During acceleration | When the output current (output torque under Real sensorless vector control or vector control) of the inverter exceeds the stall prevention level (Pr. 22 "Stall prevention operation level", etc.), this function stops the increase in frequency until the overload current decreases to prevent the inverter from resulting in overcurrent trip. When the overload current has reduced below stall prevention operation level, this function increases the frequency again. | | |
| | During constant-speed operation | When the output current (output torque under Real sensorless vector control or vector control) of the inverter exceeds the stall prevention level (Pr. 22 "Stall prevention operation level", etc.), this function reduces frequency until the overload current decreases to prevent the inverter from resulting in overcurrent trip. When the overload current has reduced below stall prevention operation level, this function increases the frequency up to the set value. | | |
| | During deceleration | When the output current (output torque under Real sensorless vector control or vector control) of the inverter exceeds the stall prevention level (Pr. 22 "Stall prevention operation level", etc.), this function stops the decrease in frequency until the overload current decreases to prevent the inverter from resulting in overcurrent trip. When the overload current has decreased below stall prevention operation level, this function decreases the frequency again. | | |
| **Check point** | • Check that the Pr. 0 "Torque boost" setting is not too large.<br>• The Pr. 7 "Acceleration time" and Pr. 8 "Deceleration time" settings may be too short.<br>• Check that the load is not too heavy.<br>• Check for any failures in peripheral devices.<br>• Check that the Pr. 13 "Starting frequency" is not too large.<br>• Check that Pr. 22 "Stall prevention operation level" is appropriate. | | | |
| **Corrective action** | • Gradually increase or decrease the Pr. 0 setting by 1% at a time and check the motor status.(Refer to page 5-629.)<br>• Set a larger value in Pr. 7 "Acceleration time" and Pr. 8 "Deceleration time". (Refer to page 5-225.)<br>• Reduce the load.<br>• Try Advanced magnetic flux vector control, Real sensorless vector control, or vector control.<br>• Change the Pr. 14 "Load pattern selection" setting.<br>• The stall prevention operation current can be set in Pr. 22 "Stall prevention operation level". (Initial value is 150%.) The acceleration/deceleration time may change. Increase the stall prevention operation level with Pr. 22 "Stall prevention operation level", or disable stall prevention with Pr. 156 "Stall prevention operation selection". (Use Pr. 156 to set either operation continued or not at OL operation.) | | | |

| | | | | |
|---|---|---|---|---|
| **Operation panel indication** | **oL** | oL | **FR-PU07** | **oL** |
| **Name** | Stall prevention (overvoltage) | | | |
| **Description** | • When the output voltage of the inverter increases, the stall prevention (overvoltage) function activates.<br>• The regeneration avoidance function activates due to excessive regenerative power of the motor. (Refer to page 5-662.)<br>• The following section explains the stall prevention (overvoltage) function. | | | |
| | During deceleration | If the regenerative power of the motor becomes excessive to exceed the regenerative power consumption capability, this function stops decreasing the frequency to prevent overvoltage trip. As soon as the regenerative power has reduced, deceleration resumes. | | |
| **Check point** | • Check for sudden speed reduction.<br>• Check if the regeneration avoidance function (Pr. 882 to Pr. 886) is being used. (Refer to page 5-662.) | | | |
| **Corrective action** | The deceleration time may change. Increase the deceleration time using Pr. 8 "Deceleration time". | | | |

| | | | | |
|---|---|---|---|---|
| **Operation panel indication** | **RB** | Rb | **FR-PU07** | **RB** |
| **Name** | Regenerative brake pre-alarm (Standard models only) | | | |
| **Description** | Appears if the regenerative brake duty reaches or exceeds 85% of the Pr. 70 "Special regenerative brake duty" value. If the regenerative brake duty reaches 100%, a regenerative overvoltage (E. OV□) occurs. | | | |
| **Check point** | • Check if the brake resistor duty is not too high.<br>• Check that the Pr. 30 "Regenerative function selection" and Pr. 70 settings are correct. | | | |
| **Corrective action** | • Set the deceleration time longer.<br>• Check the Pr. 30 and Pr. 70 settings. (Refer to page 5-652.) | | | |

| | | | | |
|---|---|---|---|---|
| **Operation panel indication** | **TH** | TH | **FR-PU07** | **TH** |
| **Name** | Electronic thermal relay function pre-alarm | | | |
| **Description** | Appears if the cumulative value of the electronic thermal O/L relay reaches or exceeds 85% of the preset level of Pr. 9 "Electronic thermal O/L relay". If the value reaches 100% of Pr. 9 setting, motor overload trip (E.THM) occurs. | | | |
| **Check point** | • Check for large load or sudden acceleration.<br>• Check that the Pr. 9 setting is appropriate. (Refer to page 5-284.) | | | |
| **Corrective action** | • Reduce the load and frequency of operation.<br>• Set an appropriate value in Pr. 9. (Refer to page 5-284.) | | | |

| | | | | |
|---|---|---|---|---|
| **Operation panel indication** | **PS** | PS | **FR-PU07** | **PS** |
| **Name** | PU stop | | | |
| **Description** | • The motor is stopped using STOP/RESET key under the mode other than the PU operation mode. (To enable STOP/RESET key under the mode other than the PU operation mode, set Pr. 75 "Reset selection/disconnected PU detection/PU stop selection". Refer to page 5-184 for details.)<br>• The motor is stopped by the emergency stop function. | | | |
| **Check point** | • Check for a stop made by pressing STOP/RESET key of the operation panel.<br>• Check for whether the X92 signal is OFF. | | | |
| **Corrective action** | • Turn the start signal OFF and release with PU/EXT key.<br>• Turn ON the X92 signal and OFF the start signal for release. | | | |

| | | | | |
|---|---|---|---|---|
| **Operation panel indication** | **SL** | SL | **FR-PU07** | **SL** |
| **Name** | Speed limit indication | | | |
| **Description** | Output if the speed limit level is exceeded during torque control. | | | |
| **Check point** | • Check that the torque command is not larger than required.<br>• Check if the speed limit level is set too low. | | | |
| **Corrective action** | • Decrease the torque command value.<br>• Increase the speed limit level. | | | |

| | | | | |
|---|---|---|---|---|
| **Operation panel indication** | **CP** | CP | **FR-PU07** | **CP** |
| **Name** | Parameter copy | | | |
| **Description** | Appears when parameter copy is performed between inverters FR-A820-03160(55K) or lower, FR-A840-01800(55K) or lower, FR-A820-03800(75K) or higher and FR-A840-02160(75K) or higher. | | | |
| **Check point** | Resetting of Pr. 9, Pr. 30, Pr. 51, Pr. 56, Pr. 57, Pr. 61, Pr. 70, Pr. 72, Pr. 80, Pr. 82, Pr. 90 to Pr. 94, Pr. 453, Pr. 455, Pr. 458 to Pr. 462, Pr. 557, Pr. 859, Pr. 860 and Pr. 893 is necessary. | | | |
| **Corrective action** | Set the initial value in Pr. 989 "Parameter copy alarm release". | | | |

| | | | | |
|---|---|---|---|---|
| **Operation panel indication** | **SA** | SA | **FR-PU07** | — |
| **Name** | Safety stop | | | |
| **Description** | Appears when safety stop function is activated (during output shutoff). (Refer to page 2-54.) | | | |
| **Check point** | • Check if an emergency stop device is activated.<br>• Check if the shorting wire between S1 and PC or between S2 and PC is disconnected when not using the safety stop function. | | | |
| **Corrective action** | • An emergency stop device is active when using the safety stop function. Identify the cause of emergency stop, ensure the safety and restart the system.<br>• When not using the safety stop function, short across terminals S1 and PC and across S2 and PC with shorting wire for the inverter to run.<br>• If "SA" is indicated when wires across S1 and SIC and across S2 and SIC are both conducted while using the safety stop function (drive enabled), internal failure might be the cause. Check the wiring of terminals S1, S2 and SIC and contact your sales representative if the wiring has no fault. | | | |

| | | | | |
|---|---|---|---|---|
| **Operation panel indication** | **MT1 to MT3** | MT 1 to MT 3 | **FR-PU07** | **MT** ① |
| **Name** | Maintenance signal output 1 to 3 | | | |
| **Description** | Appears when the inverter's cumulative energization time reaches or exceeds the parameter set value. Set the time until the MT is displayed using Pr. 504 "Maintenance timer 1 warning output set time" (MT1), Pr. 687 "Maintenance timer 2 warning output set time" (MT2), and Pr. 689 "Maintenance timer 3 warning output set time" (MT3).<br>MT does not appear when the settings of Pr. 504, Pr. 687, and Pr. 689 are initial values (9999). | | | |
| **Check point** | The set time of maintenance timer has been exceeded. (Refer to page 5-219.) | | | |
| **Corrective action** | Take appropriate countermeasures according to the purpose of the maintenance timer setting.<br>Setting "0" in Pr. 503 "Maintenance timer 1", Pr. 686 "Maintenance timer 2", and Pr. 688 "Maintenance timer 3" clears the indication. | | | |
| ① MT appears for all of MT1, MT2 and MT3. | | | | |

| | | | | |
|---|---|---|---|---|
| **Operation panel indication** | **UF** | UF | **FR-PU07** | — |
| **Name** | USB host error | | | |
| **Description** | Appears when an excessive current flows into the USB A connector. | | | |
| **Check point** | Check if a USB device other than a USB memory device is connected to the USB A connector. | | | |
| **Corrective action** | • If a device other than a USB memory device is connected to the USB A connector, remove the device.<br>• Setting Pr. 1049 "USB host reset "= "1" or inverter reset clears the UF indication. | | | |

| | | | | |
|---|---|---|---|---|
| **Operation panel indication** | **HP1 to HP3** | HP 1 to HP 3 | **FR-PU07** | — |
| **Name** | Home position return error | | | |
| **Description** | Appears when an error occurs during the home position return operation under position control. For the details, refer to page 5-163. | | | |
| **Check point** | Identify the cause of the error occurrence. | | | |
| **Corrective action** | Check the parameter setting, and check that the input signal is correct. | | | |

| | | | | |
|---|---|---|---|---|
| **Operation panel indication** | **EV** | EV | **FR-PU07** | — |
| **Name** | 24 V external power supply operation | | | |
| **Description** | Flickers when the main circuit power supply is off and the 24 V external power supply is being input. | | | |
| **Check point** | • Power is supplied from a 24 V external power supply. | | | |
| **Corrective action** | • Turning ON the power supply (main circuit) of the inverter clears the indication.<br>• If the indication is still displayed after turning ON of the power supply (main circuit) of the inverter, the power supply voltage may be low, or the jumper between the terminals P/+ and P1 may be disconnected. | | | |

### 6.5.3 Alarm

Output is not shut off when a protective function activates. An alarm can also be output with a parameter setting.

(Set "98" in Pr. 190 to Pr. 196 (output terminal function selection). (Refer to page 5-350.)

| | | | | |
|---|---|---|---|---|
| **Operation panel indication** | **FN** | FN | **FR-PU07** | **FN** |
| **Name** | Fan alarm | | | |
| **Description** | For the inverter that contains a cooling fan, "FN" appears on the operation panel when the cooling fan stops due to a fault, low rotation speed or different operation from the setting of Pr. 244 "Cooling fan operation selection". | | | |
| **Check point** | Check the cooling fan for a failure. | | | |
| **Corrective action** | The fan may be faulty. Please contact your sales representative. | | | |

| | | | | |
|---|---|---|---|---|
| **Operation panel indication** | **FN2** | FN2 | **FR-PU07** | **FN2** |
| **Name** | Internal fan alarm (IP55 compatible models only) | | | |
| **Description** | FN2 appears on the operation panel when the internal air circulation fan stops due to a fault or low rotation speed. | | | |
| **Check point** | Check the internal air circulation fan for a failure. | | | |
| **Corrective action** | The fan may be faulty. Please contact your sales representative. | | | |

## 6.5.4 Fault

When a protective function activates, the inverter trips and a fault signal is output.

| | | | | |
|---|---|---|---|---|
| **Operation panel indication** | **E.OC1** | E. OC 1 | **FR-PU07** | **OC During Acc** |
| **Name** | Overcurrent trip during acceleration | | | |
| **Description** | When the inverter output current reaches or exceeds approximately 235% ① of the rated current during acceleration, the protection circuit is activated and the inverter trips. | | | |
| **Check point** | • Check for sudden speed acceleration.<br>• Check if the downward acceleration time is too long in a lift application.<br>• Check for output short-circuit.<br>• Check that the Pr. 3 "Base frequency" setting is not 60 Hz when the motor rated frequency is 50 Hz.<br>• Check if the stall prevention operation level is set too high. Check if the fast-response current limit operation is disabled.<br>• Check that the regenerative driving is not performed frequently. (Check if the output voltage becomes larger than the V/F reference voltage at regenerative driving and overcurrent occurs due to increase in the motor current.)<br>• Check that the power supply for RS-485 terminal is not shorted (under vector control).<br>• Check that the encoder wiring and the specifications (encoder power supply, resolution, differential/complementary) are correct. Check also that the motor wiring (U, V, W) is correct (under vector control).<br>• Check that the rotation direction is not switched from forward to reverse rotation (or from reverse to forward) during torque control under Real sensorless vector control.<br>• Check that the inverter capacity matches with the motor capacity. (PM sensorless vector control)<br>• Check if a start command is given to the inverter while the motor is coasting. (PM sensorless vector control) | | | |
| **Corrective action** | • Set the acceleration time longer. (Shorten the downward acceleration time of the lift.)<br>• If "E.OC1" always appears at start, disconnect the motor once and restart the inverter. If "E.OC1" still appears, contact your sales representative.<br>• Check the wiring to make sure that output short circuit does not occur.<br>• Set 50 Hz in Pr. 3 "Base frequency". (Refer to page 5-631.)<br>• Lower the stall prevention operation level. Activate the fast-response current limit operation. (Refer to page 5-83.)<br>• Set the base voltage (rated voltage of the motor, etc.) in Pr. 19 "Base frequency voltage". (Refer to page 5-631.)<br>• Check RS-485 terminal connection (under vector control).<br>• Check the wiring and specifications of the encoder and the motor. Perform the setting according to the specifications of the encoder and the motor (under vector control). (Refer to page 2-61.)<br>• Prevent the motor from switching the rotation direction from forward to reverse (or from reverse to forward) during torque control under Real sensorless vector control.<br>• Choose inverter and motor capacities that match. (PM sensorless vector control)<br>• Input a start command after the motor stops. Alternatively, use the automatic restart after instantaneous power failure/flying start function. (Refer to page 5-549.) (IPM sensorless vector control) | | | |
| ① Differs according to ratings. The rating can be changed using Pr. 570 "Multiple rating setting". (Refer to page 5-193.) 148% for SLD rating,170% for LD rating, 235% for ND rating (initial setting), and 280% for HD rating | | | | |

| | | | | |
|---|---|---|---|---|
| **Operation panel indication** | **E.OC2** | E. OC2 | **FR-PU07** | **Stedy Spd OC** |
| **Name** | Overcurrent trip during constant speed | | | |
| **Description** | When the inverter output current reaches or exceeds approximately 235% ① of the rated current during constant-speed operation, the protection circuit is activated and the inverter trips. | | | |
| **Check point** | • Check for sudden load change.<br>• Check for output short-circuit.<br>• Check if the stall prevention operation level is set too high. Check if the fast-response current limit operation is disabled.<br>• Check that the power supply for RS-485 terminal is not shorted (under vector control).<br>• Check that the rotation direction is not switched from forward to reverse rotation (or from reverse to forward) during torque control under Real sensorless vector control.<br>• Check that the inverter capacity matches with the motor capacity. (PM sensorless vector control)<br>• Check if a start command is given to the inverter while the motor is coasting. (PM sensorless vector control) | | | |
| **Corrective action** | • Keep the load stable.<br>• Check the wiring to make sure that output short circuit does not occur.<br>• Lower the stall prevention operation level. Activate the fast-response current limit operation. (Refer to page 5-83.)<br>• Check RS-485 terminal connection (under vector control).<br>• Prevent the motor from switching the rotation direction from forward to reverse (or from reverse to forward) during torque control under Real sensorless vector control.<br>• Choose inverter and motor capacities that match. (PM sensorless vector control)<br>• Input a start command after the motor stops. Alternatively, use the automatic restart after instantaneous power failure/flying start function. (Refer to page 5-549.) (PM sensorless vector control) | | | |
| ① Differs according to ratings. The rating can be changed using Pr. 570 "Multiple rating setting". (Refer to page 5-193.) 148% for SLD rating,170% for LD rating, 235% for ND rating (initial setting), and 280% for HD rating | | | | |

| | | | | |
|---|---|---|---|---|
| **Operation panel indication** | **E.OC3** | E. OC3 | **FR-PU07** | **OC During Dec** |
| **Name** | Overcurrent trip during deceleration or stop | | | |
| **Description** | When the inverter output current reaches or exceeds approximately 235% ① of the rated current during deceleration (other than acceleration or constant speed), the protection circuit is activated and the inverter trips. | | | |
| **Check point** | • Check for sudden speed reduction.<br>• Check for output short-circuit.<br>• Check for too fast operation of the motor's mechanical brake.<br>• Check if the stall prevention operation level is set too high. Check if the fast-response current limit operation is disabled.<br>• Check that the power supply for RS-485 terminal is not shorted (under vector control).<br>• Check that the rotation direction is not switched from forward to reverse rotation (or from reverse to forward) during torque control under Real sensorless vector control.<br>• Check that the inverter capacity matches with the motor capacity. (PM sensorless vector control)<br>• Check if a start command is given to the inverter while the motor is coasting. (PM sensorless vector control) | | | |
| **Corrective action** | • Set the deceleration time longer.<br>• Check the wiring to make sure that output short circuit does not occur.<br>• Check the mechanical brake operation.<br>• Lower the stall prevention operation level. Activate the fast-response current limit operation. (Refer to page 5-83.)<br>• Check RS-485 terminal connection (under vector control).<br>• Prevent the motor from switching the rotation direction from forward to reverse (or from reverse to forward) during torque control under Real sensorless vector control.<br>• Choose inverter and motor capacities that match. (PM sensorless vector control)<br>• Input a start command after the motor stops. Alternatively, use the automatic restart after instantaneous power failure/flying start function. (Refer to page 5-549.) (PM sensorless vector control) | | | |
| ① Differs according to ratings. The rating can be changed using Pr. 570 "Multiple rating setting". (Refer to page 5-193.) 148% for SLD rating,170% for LD rating, 235% for ND rating (initial setting), and 280% for HD rating | | | | |

| | | | | |
|---|---|---|---|---|
| **Operation panel indication** | **E.OV1** | E. OV 1 | **FR-PU07** | **OV During Acc** |
| **Name** | Regenerative overvoltage trip during acceleration | | | |
| **Description** | If regenerative power causes the inverter's internal main circuit DC voltage to reach or exceed the specified value, the protection circuit is activated to stop the inverter output. The circuit may also be activated by a surge voltage produced in the power supply system. | | | |
| **Check point** | • Check for too slow acceleration. (e.g. during downward acceleration in vertical lift load)<br>• Check that the Pr. 22 "Stall prevention operation level" is not set to the no load current or lower.<br>• Check if the stall prevention operation is frequently activated in an application with a large load inertia. | | | |
| **Corrective action** | • Set the acceleration time shorter. Use the regeneration avoidance function (Pr. 882 to Pr. 886). (Refer to page 5-662.)<br>• Set a value larger than the no load current in Pr. 22.<br>• Set Pr. 154 "Voltage reduction selection during stall prevention operation" = "10, 11". (Refer to page 5-83.) | | | |

| | | | | |
|---|---|---|---|---|
| **Operation panel indication** | **E.OV2** | E. OV2 | **FR-PU07** | **Stedy Spd OV** |
| **Name** | Regenerative overvoltage trip during constant speed | | | |
| **Description** | If regenerative power causes the inverter's internal main circuit DC voltage to reach or exceed the specified value, the protection circuit is activated to stop the inverter output. The circuit may also be activated by a surge voltage produced in the power supply system. | | | |
| **Check point** | • Check for sudden load change.<br>• Check that the Pr. 22 "Stall prevention operation level" is not set to the no load current or lower.<br>• Check if the stall prevention operation is frequently activated in an application with a large load inertia.<br>• Check that acceleration/deceleration time is not too short. | | | |
| **Corrective action** | • Keep the load stable.<br>• Use the regeneration avoidance function (Pr. 882 to Pr. 886). (Refer to page 5-662.)<br>• Use the brake unit or power regeneration common converter (FR-CV) as required.<br>• Set a value larger than the no load current in Pr. 22.<br>• Set Pr. 154 "Voltage reduction selection during stall prevention operation" = "10, 11". (Refer to page 5-83.)<br>• Set the acceleration/deceleration time longer. (Under vector control or Advanced magnetic flux vector control, the output torque can be increased. However, sudden acceleration may cause an overshoot in speed, resulting in an occurrence of overvoltage.) | | | |

| | | | | |
|---|---|---|---|---|
| **Operation panel indication** | **E.OV3** | E. OV3 | **FR-PU07** | **OV During Dec** |
| **Name** | Regenerative overvoltage trip during deceleration or stop | | | |
| **Description** | If regenerative power causes the inverter's internal main circuit DC voltage to reach or exceed the specified value, the protection circuit is activated to stop the inverter output. The circuit may also be activated by a surge voltage produced in the power supply system. | | | |
| **Check point** | • Check for sudden speed reduction.<br>• Check if the stall prevention operation is frequently activated in an application with a large load inertia. | | | |
| **Corrective action** | • Set the deceleration time longer. (Set the deceleration time which matches the moment of inertia of the load.)<br>• Make the brake cycle longer.<br>• Use the regeneration avoidance function (Pr. 882 to Pr. 886). (Refer to page 5-662.)<br>• Use the brake unit or power regeneration common converter (FR-CV) as required.<br>• Set Pr. 154 "Voltage reduction selection during stall prevention operation" = "10, 11". (Refer to page 5-83.) | | | |

| Operation panel indication | E.THT | E. THT | FR-PU07 | Inv. Overload |
|---|---|---|---|---|
| **Name** | Inverter overload trip ① | | | |
| **Description** | When the temperature of the output transistor element exceeds the protection level while a current flows at the rated output current level or higher without causing an overcurrent trip (E.OC□), the inverter output is stopped.(Permissible overload capacity 150% 60 s) | | | |
| **Check point** | • Check that acceleration/deceleration time is not too short.<br>• Check that torque boost setting is not too large (small).<br>• Check that load pattern selection setting is appropriate for the load pattern of the using machine.<br>• Check the motor for the use under overload.<br>• Check that the encoder wiring and the specifications (encoder power supply, resolution, differential/complementary) are correct. Check also that the motor wiring (U, V, W) is correct (under vector control). | | | |
| **Corrective action** | • Set the acceleration/deceleration time longer.<br>• Adjust the torque boost setting.<br>• Set the load pattern selection setting according to the load pattern of the using machine.<br>• Reduce the load.<br>• Check the wiring and specifications of the encoder and the motor. Perform the setting according to the specifications of the encoder and the motor (under vector control). (Refer to page 2-61.) | | | |

① Resetting the inverter initializes the internal cumulative heat value of the electronic thermal O/L relay function.

| Operation panel indication | E.THM | E. THM | FR-PU07 | Motor Ovrload |
|---|---|---|---|---|
| **Name** | Motor overload trip ① | | | |
| **Description** | The electronic thermal O/L relay function in the inverter detects motor overheat, which is caused by overload or reduced cooling capability during low-speed operation. When the cumulative heat value reaches 85% of the Pr. 9 "Electronic thermal O/L relay" setting, pre-alarm (TH) is output. When the accumulated value reaches the specified value, the protection circuit is activated to stop the inverter output. | | | |
| **Check point** | • Check the motor for the use under overload.<br>• Check that the setting of Pr. 71 "Applied motor" for motor selection is correct. (Refer to page 5-421.)<br>• Check that the stall prevention operation setting is correct. | | | |
| **Corrective action** | • Reduce the load.<br>• For a constant-torque motor, set the constant-torque motor in Pr. 71.<br>• Set the stall prevention operation level accordingly. (Refer to page 5-83.) | | | |

① Resetting the inverter initializes the internal cumulative heat value of the electronic thermal O/L relay function.

| Operation panel indication | E.FIN | E. FIN | FR-PU07 | H/Sink O/Temp |
|---|---|---|---|---|
| **Name** | Heatsink overheat | | | |
| **Description** | When the heatsink overheats, the temperature sensor activates, and the inverter output is stopped.<br>The FIN signal can be output when the temperature becomes approximately 85% of the heatsink overheat protection operation temperature.<br>For the terminal used for the FIN signal output, assign the function by setting "26 (positive logic) or 126 (negative logic)" from Pr. 190 to Pr. 196 (output terminal function selection). (Refer to page 5-350.) | | | |
| **Check point** | • Check for too high surrounding air temperature.<br>• Check for heatsink clogging.<br>• Check that the cooling fan is not stopped. (Check that "FN" is not displayed on the operation panel.) | | | |
| **Corrective action** | • Set the surrounding air temperature to within the specifications.<br>• Clean the heatsink.<br>• Replace the cooling fan. | | | |

| | | | | |
|---|---|---|---|---|
| **Operation panel indication** | **E.IPF** | E. IPF | **FR-PU07** | **Inst. Pwr. Loss** |
| **Name** | Instantaneous power failure (Standard models and IP55 compatible models only) | | | |
| **Description** | If a power failure occurs for longer than 15 ms ① (this also applies to inverter input shut-off), the instantaneous power failure protective function is activated to trip the inverter in order to prevent the control circuit from malfunctioning. If a power failure persists for 100 ms or longer, the fault warning output is not provided, and the inverter restarts if the start signal is ON upon power restoration. (The inverter continues operating if an instantaneous power failure is within 15 ms ①.) In some operating status (load magnitude, acceleration/deceleration time setting, etc.), overcurrent or other protection may be activated upon power restoration.<br>When instantaneous power failure protection is activated, the IPF signal is output.<br>(Refer to page 5-540, page 5-549.) | | | |
| **Check point** | Find the cause of instantaneous power failure occurrence. | | | |
| **Corrective action** | • Remedy the instantaneous power failure.<br>• Prepare a backup power supply for instantaneous power failure.<br>• Set the function of automatic restart after instantaneous power failure (Pr. 57).<br>(Refer to page 5-540, page 5-549.) | | | |
| ① 10 ms for IP55 compatible models | | | | |

| | | | | |
|---|---|---|---|---|
| **Operation panel indication** | **E.UVT** | E. UVT | **FR-PU07** | **Under Voltage** |
| **Name** | Undervoltage (Standard models and IP55 compatible models only) | | | |
| **Description** | If the power supply voltage of the inverter decreases, the control circuit will not perform normal functions. In addition, the motor torque will be insufficient and/or heat generation will increase. To prevent this, if the power supply voltage decreases to about 150 V AC (300 V AC for the 400 V class) or below, this function shuts off the inverter output.<br>When a jumper is not connected across P/+ and P1, the undervoltage protective function is activated.<br>When undervoltage protection is activated, the IPF signal is output.<br>(Refer to page 5-540, page 5-549.) | | | |
| **Check point** | • Check if a high-capacity motor is driven.<br>• Check if the jumper is connected across terminals P/+ and P1. | | | |
| **Corrective action** | • Check the power supply system equipment such as the power supply.<br>• Do not remove the jumper across terminals P/+ and P1 except when connecting a DC reactor.<br>• If the problem still persists after taking the above measure, contact your sales representative. | | | |

| | | | | |
|---|---|---|---|---|
| **Operation panel indication** | **E.ILF** | E. ILF | **FR-PU07** | **Input phase loss** |
| **Name** | Input phase loss (Standard models and IP55 compatible models only) | | | |
| **Description** | When Pr. 872 "Input phase loss protection selection" is enabled ("1") and one of the three-phase power input is lost, the inverter output is shut off. This protective function is not available when Pr. 872 is set to the initial value (Pr. 872 = "0"). (Refer to page 5-296) | | | |
| **Check point** | Check for a break in the cable for the three-phase power supply input. | | | |
| **Corrective action** | • Wire the cables properly.<br>• Repair a break portion in the cable. | | | |

| | | | | |
|---|---|---|---|---|
| **Operation panel indication** | **E.OLT** | E. OLT | **FR-PU07** | **Stll Prev STP** |
| **Name** | Stall prevention stop | | | |
| **Description** | V/F Magnetic flux<br>If the output frequency has fallen to 0.5 Hz by stall prevention operation and remains for 3 s, a fault (E.OLT) appears and the inverter trips. OL appears while stall prevention is being activated. | | | |
| | Sensorless Vector PM<br>When speed control is performed, a fault (E.OLT) appears and the inverter trips if frequency drops to the Pr. 865 "Low speed detection" (initial value is 1.5 Hz) setting by torque limit operation and the output torque exceeds the Pr. 874 "OLT level setting" (initial value is 150%) setting and remains 3 s. | | | |
| **Check point** | • Check the motor for the use under overload.<br>• Check that the Pr. 865 and Pr. 874 values are correct.<br>(Check the Pr. 22 "Stall prevention operation level" setting under V/F control and Advanced magnetic flux vector control.)<br>• Check if a motor is connected under PM sensorless vector control. | | | |
| **Corrective action** | • Reduce the load.<br>• Change the Pr. 22, Pr. 865, and Pr. 874 values. (Check the Pr. 22 setting under V/F control and Advanced magnetic flux vector control.)<br>• For a test run without connecting a motor, select the PM sensorless vector control test operation. (Refer to page 5-59.)<br>• Also check that the stall prevention (overcurrent) warning (OL) or the stall prevention (overvoltage) warning (oL) countermeasure is taken. | | | |

| | | | | |
|---|---|---|---|---|
| **Operation panel indication** | **E.SOT** PM | E. SOT | **FR-PU07** | **Motor step out** |
| **Name** | Loss of synchronism detection | | | |
| **Description** | The inverter trips when the motor operation is not synchronized. (This function is only available under PM sensorless vector control.) | | | |
| **Check point** | • Check that the PM motor is not driven overloaded.<br>• Check if a start command is given to the inverter while the PM motor is coasting.<br>• Check if a motor is connected under PM sensorless vector control.<br>• Check if a PM motor other than the MM-CF series is driven. | | | |
| **Corrective action** | • Set the acceleration time longer.<br>• Reduce the load.<br>• If the inverter restarts during coasting, set Pr. 57 "Restart coasting time" ≠ "9999", and select the automatic restart after instantaneous power failure.<br>• Check the connection of the IPM motor.<br>• For a test run without connecting a motor, select the PM sensorless vector control test operation. (Refer to page 5-59.)<br>• Drive an IPM motor (MM-CF series)<br>• When driving an IPM motor other than MM-CF series, offline auto tuning must be performed. (Refer to page 5-440.) | | | |

| | | | | |
|---|---|---|---|---|
| **Operation panel indication** | **E.BE** | E. bE | **FR-PU07** | **Br.Cct.Fault** |
| **Name** | Brake transistor alarm detection | | | |
| **Description** | • The inverter trips if a fault due to damage of the brake transistor and such occurs in the brake circuit. **In such a case, the power supply to the inverter must be shut off immediately.**<br>• Appears when an internal circuit fault occurred for separated converter types and IP55 compatible models. | | | |
| **Check point** | • Reduce the load inertia.<br>• Check that the brake duty is proper. | | | |
| **Corrective action** | Replace the inverter. | | | |

| | | | | |
|---|---|---|---|---|
| **Operation panel indication** | **E.GF** | E. GF | **FR-PU07** | **Ground Fault** |
| **Name** | Output side earth (ground) fault overcurrent | | | |
| **Description** | The inverter trips if an earth (ground) fault overcurrent flows due to an earth (ground) fault that occurred on the inverter's output side (load side). | | | |
| **Check point** | Check for an earth (ground) fault in the motor and connection cable. | | | |
| **Corrective action** | Remedy the earth (ground) fault portion. | | | |

| | | | | |
|---|---|---|---|---|
| **Operation panel indication** | **E.LF** | E. LF | **FR-PU07** | **E.LF** |
| **Name** | Output phase loss | | | |
| **Description** | The inverter trips if one of the three phases (U, V, W) on the inverter's output side (load side) is lost. | | | |
| **Check point** | • Check the wiring. (Check that the motor is normally operating.)<br>• Check that the capacity of the motor used is not smaller than that of the inverter.<br>• Check if a start command is given to the inverter while the motor is coasting.<br>(PM sensorless vector control) | | | |
| **Corrective action** | • Wire the cables properly.<br>• Input a start command after the motor stops. Alternatively, use the automatic restart after instantaneous power failure/flying start function (page 5-549).<br>(PM sensorless vector control) | | | |

| | | | | |
|---|---|---|---|---|
| **Operation panel indication** | **E.OHT** | E. OHT | **FR-PU07** | **OH Fault** |
| **Name** | External thermal relay operation | | | |
| **Description** | The inverter trips if the external thermal relay provided for motor overheat protection or the internally mounted thermal relay in the motor, etc. switches ON (contacts open).<br>This function is available when "7" (OH signal) is set in any of Pr. 178 to Pr. 189 (input terminal function selection). This protective function is not available in the initial status. (OH signal is not assigned.) | | | |
| **Check point** | • Check for motor overheating.<br>• Check that the value "7" (OH signal) is set correctly to any of Pr. 178 to Pr. 189 (input terminal function selection). | | | |
| **Corrective action** | • Reduce the load and operation duty.<br>• Even if the relay contacts are reset automatically, the inverter will not restart unless it is reset. | | | |

| | | | | |
|---|---|---|---|---|
| **Operation panel indication** | **E.PTC** | E. PTC | **FR-PU07** | **PTC activated** |
| **Name** | PTC thermistor operation | | | |
| **Description** | The inverter trips if resistance of the PTC thermistor connected between the terminal 2 and terminal 10 has reached the Pr. 561 "PTC thermistor protection level" setting or higher. When the initial value (Pr. 561 = "9999") is set, this protective function is not available. | | | |
| **Check point** | • Check the connection with the PTC thermistor.<br>• Check the Pr. 561 setting.<br>• Check the motor for operation under overload. | | | |
| **Corrective action** | Reduce the load. | | | |

| | | | | |
|---|---|---|---|---|
| **Operation panel indication** | **E.OPT** | E. OPT | **FR-PU07** | **Option Fault** |
| **Name** | Option fault | | | |
| **Description** | • Appears when the AC power supply is connected to the terminal R/L1, S/L2, or T/L3 accidentally when a high power factor converter (FR-HC2) or power regeneration common converter (FR-CV) is connected (when Pr. 30 "Regenerative function selection" = "2").<br>• Appears when torque command by the plug-in option is selected using Pr. 804 "Torque command source selection" and no plug-in option is mounted. This function is available under torque control.<br>• Appears when the switch for manufacturer setting of the plug-in option is changed.<br>• Appears when a communication option is connected while Pr. 296 "Password lock level" = "0 or 100". | | | |
| **Check point** | • Check that the AC power supply is not connected to the terminal R/L1, S/L2, or T/L3 when a high power factor converter (FR-HC2) or power regeneration common converter (FR-CV) is connected (when Pr. 30 = "2").<br>• Check that the plug-in option for torque command setting is connected.<br>• Check for the password lock with a setting of Pr. 296 = "0, 100". | | | |
| **Corrective action** | • Check the Pr. 30 setting and wiring.<br>• The inverter may be damaged if the AC power supply is connected to the terminal R/L1, S/L2, or T/L3 when a high power factor converter is connected. Please contact your sales representative.<br>• Check for connection of the plug-in option. Check the Pr. 804 setting.<br>• Set the switch on the plug-in option, which is for manufacturer setting, back to the initial setting. (Refer to the Instruction Manual of each option.)<br>• To apply the password lock when installing a communication option, set Pr. 296 ≠ "0, 100". (Refer to page 5-199.) | | | |

| | | | | |
|---|---|---|---|---|
| **Operation panel indication** | **E.OP1** | E. OP 1 | **FR-PU07** | **Option1 Fault** |
| **Name** | Communication option fault | | | |
| **Description** | The inverter trips if a communication line error occurs in the communication option. | | | |
| **Check point** | • Check for an incorrect option function setting and operation.<br>• Check that the plug-in option is plugged into the connector properly.<br>• Check for a break in the communication cable.<br>• Check that the terminating resistor is fitted properly. | | | |
| **Corrective action** | • Check the option function setting, etc.<br>• Connect the plug-in option securely.<br>• Check the connection of communication cable. | | | |

| | | | | |
|---|---|---|---|---|
| **Operation panel indication** | **E.16 to E.20** | E. 16 to E. 20 | **FR-PU07** | – |
| **Name** | User definition error by the PLC function | | | |
| **Description** | The protective function is activated by setting "16 to 20" in the special register SD1214 for the PLC function. The inverter trips when the protective function is activated.<br>The protective function is activated when the PLC function is enabled. This protective function is not available in the initial setting (Pr. 414 = "0").<br>Any character string can be displayed on FR-PU07 by sequence programs. | | | |
| **Check point** | • Check if "16 to 20" is set in the special register SD1214. | | | |
| **Corrective action** | • Set a value other than "16 to 20" in the special register SD1214. | | | |

| | | | | |
|---|---|---|---|---|
| **Operation panel indication** | **E.PE** | E. PE | **FR-PU07** | **Corrupt Memory** |
| **Name** | Parameter storage device fault (control circuit board) | | | |
| **Description** | The inverter trips if a fault occurs in the parameter stored. (EEPROM failure) | | | |
| **Check point** | Check for too many numbers of parameter write times. | | | |
| **Corrective action** | Please contact your sales representative.<br>Set "1" in Pr. 342 "Communication EEPROM write selection" (write to RAM) for the operation which requires frequent parameter writing via communication, etc. Note that writing to RAM goes back to the initial status at power OFF. | | | |

| | | | | |
|---|---|---|---|---|
| **Operation panel indication** | **E.PUE** | E. PUE | **FR-PU07** | **PU Leave Out** |
| **Name** | PU disconnection | | | |
| **Description** | • The inverter trips if communication between the inverter and PU is suspended, e.g. the operation panel or parameter unit is disconnected, when the disconnected PU disconnection function is valid in Pr. 75 "Reset selection/disconnected PU detection/PU stop selection".<br>• The inverter trips if communication errors occurred consecutively for more than permissible number of retries when Pr. 121 "Number of PU communication retries" ≠ "9999" during the RS-485 communication.<br>• The inverter trips if communication is broken within the period of time set in Pr. 122 "PU communication check time interval" during the RS-485 communication via the PU connector. | | | |
| **Check point** | • Check that the operation panel (FR-DU08) or the parameter unit (FR-PU07) is connected properly.<br>• Check the Pr. 75 setting. | | | |
| **Corrective action** | Fit the operation panel (FR-DU08) or the parameter unit (FR-PU07) securely. | | | |

| | | | | |
|---|---|---|---|---|
| **Operation panel indication** | **E.RET** | E. RET | **FR-PU07** | **Retry No Over** |
| **Name** | Retry count excess | | | |
| **Description** | The inverter trips if the operation cannot be resumed properly within the number of retries set in Pr. 67 "Number of retries at fault occurrence". | | | |
| **Check point** | Find the cause of the fault occurrence. | | | |
| **Corrective action** | Eliminate the cause of the error preceding this error indication. | | | |

| | | | | |
|---|---|---|---|---|
| **Operation panel indication** | **E.PE2** | E. PE2 | **FR-PU07** | **PR storage alarm** |
| **Name** | Parameter storage device fault (main circuit board) | | | |
| **Description** | The inverter trips if a fault occurs in the parameter stored. (EEPROM failure) | | | |
| **Check point** | — | | | |
| **Corrective action** | Please contact your sales representative. | | | |

| | | | | |
|---|---|---|---|---|
| **Operation panel indication** | **CPU** | E. CPU | **FR-PU07** | **CPU Fault** |
| | **E. 5** | E. 5 | | **Fault 5** |
| | **E. 6** | E. 6 | | **Fault 6** |
| | **E. 7** | E. 7 | | **Fault 7** |
| **Name** | CPU fault | | | |
| **Description** | The inverter trips if the communication fault of the built-in CPU occurs. | | | |
| **Check point** | Check for devices producing excess electrical noises around the inverter. | | | |
| **Corrective action** | • Take measures against noises if there are devices producing excess electrical noises around the inverter.<br>• Please contact your sales representative. | | | |

| | | | | |
|---|---|---|---|---|
| **Operation panel indication** | **E.CTE** | E. CTE | **FR-PU07** | **E.CTE** |
| **Name** | Operation panel power supply short circuit/RS-485 terminal power supply short circuit | | | |
| **Description** | • When the power supply for the operation panel (PU connector) is shorted, the power output is shutoff and the inverter trips. The use of the operation panel (parameter unit) and the RS-485 communication via the PU connector are disabled. To reset, enter the RES signal from the terminal, reset via communication through the RS-485 terminals, or switch power OFF then ON again.<br>• When the power supply for the RS-485 terminals are short circuited, this function shuts off the power output. At this time, communication from the RS-485 terminals cannot be made. To reset, use STOP/RESET key of the operation panel, enter the RES signal, or switch power OFF then ON again. | | | |
| **Check point** | • Check that the PU connector cable is not shorted.<br>• Check that the RS-485 terminals are connected correctly. | | | |
| **Corrective action** | • Check PU and cable.<br>• Check the connection of the RS-485 terminals. | | | |

| | | | | |
|---|---|---|---|---|
| **Operation panel indication** | **E.P24** | E. P24 | **FR-PU07** | **E.P24** |
| **Name** | 24 V DC power fault | | | |
| **Description** | When the 24 V DC power output from the PC terminal is shorted, this function shuts off the power output.<br>At this time, all external contact inputs switch OFF. The inverter cannot be reset by entering the RES signal. To reset it, use the operation panel, or switch power OFF, then ON again. | | | |
| **Check point** | • Check for a short circuit in the PC terminal output.<br>• Check that the 24 V external power supply voltage is correct. | | | |
| **Corrective action** | • Repair the short-circuited portion.<br>• Supply the power at 24 V. (If the power at insufficient voltage is supplied to the 24 V input circuit for a long time, the inverter internal circuit may heat up. Input power at correct voltage although it will not damage the inverter.) | | | |

| | | | | |
|---|---|---|---|---|
| **Operation panel indication** | **E.CDO** | E. CdO | **FR-PU07** | **OC detect level** |
| **Name** | Abnormal output current detection | | | |
| **Description** | The inverter trips if the output current exceeds the Pr. 150 "Output current detection level" setting.<br>This functions is available when Pr. 167 "Output current detection operation selection" is set to "1". When the initial value (Pr. 167 = "0") is set, this protective function is not available. | | | |
| **Check point** | Check the settings of Pr. 150, Pr. 151 "Output current detection signal delay time", Pr. 166 "Output current detection signal retention time", and Pr. 167. (Refer to page 5-365.) | | | |

| | | | | |
|---|---|---|---|---|
| **Operation panel indication** | **E.IOH** | E. IOH | **FR-PU07** | **Inrush overheat** |
| **Name** | Inrush current limit circuit fault (Standard models and IP55 compatible models only) | | | |
| **Description** | The inverter trips when the resistor of the inrush current limit circuit is overheated. The inrush current limit circuit failure | | | |
| **Check point** | • Check that frequent power ON/OFF is not repeated.<br>• Check if the input side fuse (5A) in the power supply circuit of the inrush current limit circuit contactor (FR-A840-03250(110K) or higher) is blown.<br>• Check that the power supply circuit of inrush current limit circuit contactor is not damaged. | | | |
| **Corrective action** | Configure a circuit where frequent power ON/OFF is not repeated.<br>If the situation does not improve after taking the above measure, please contact your sales representative. | | | |

| | | | | |
|---|---|---|---|---|
| **Operation panel indication** | **E.SER** | E. SER | **FR-PU07** | **VFD Comm error** |
| **Name** | Communication fault (inverter) | | | |
| **Description** | The inverter trips when communication error occurs consecutively for the permissible number of retries or more when Pr. 335 "RS-485 communication retry count" ≠ "9999" during RS-485 communication from the RS-485 terminals. The inverter also trips if communication is broken for the period of time set in Pr. 336 "RS-485 communication check time interval". | | | |
| **Check point** | Check the RS-485 terminal wiring. | | | |
| **Corrective action** | Perform wiring of the RS-485 terminals properly. | | | |

| | | | | |
|---|---|---|---|---|
| **Operation panel indication** | **E.AIE** | E. AI E | **FR-PU07** | **Analog in error** |
| **Name** | Analog input fault | | | |
| **Description** | The inverter trips when a 30 mA or higher current or a 7.5 V or higher voltage is input to terminal 2 while the current input is selected by Pr. 73 "Analog input selection", or to terminal 4 while the current input is selected by Pr. 267 "Terminal 4 input selection". | | | |
| **Check point** | Check the Pr. 73, Pr. 267, and the voltage/current input switch settings.(Refer to page 5-376) | | | |
| **Corrective action** | Either give a current less than 30 mA, or set Pr. 73, Pr. 267, and the voltage/current input switch to the voltage input and input a voltage. | | | |

| | | | | |
|---|---|---|---|---|
| **Operation panel indication** | **E.USB** | E. USb | **FR-PU07** | **USB comm error** |
| **Name** | USB communication fault | | | |
| **Description** | The inverter trips when the communication is cut off for the time set in Pr. 548 "USB communication check time interval". | | | |
| **Check point** | • Check that the USB communication cable is connected securely. | | | |
| **Corrective action** | • Check the Pr. 548 setting.<br>• Connect the USB communication cable securely.<br>• Increase the Pr. 548 setting or set "9999." (Refer to page 5-625.) | | | |

| | | | | |
|---|---|---|---|---|
| **Operation panel indication** | **E.SAF** | E. SAF | **FR-PU07** | **E.SAF Fault** |
| **Name** | Safety circuit fault | | | |
| **Description** | • The inverter trips when a safety circuit fault occurs.<br>• The inverter trips if the either of the wire between S1 and SIC or S2 and SIC becomes non-conductive while using the safety stop function.<br>• When not using the safety stop function, the inverter trips when the shorting wire between terminals S1 and PC or across S2 and PC is disconnected. | | | |
| **Check point** | • Check that the safety relay module or the connection has no fault when using the safety stop function.<br>• Check if the shorting wire between S1 and PC or between S2 and PC is disconnected when not using the safety stop function. | | | |
| **Corrective action** | • When using the safety stop function, check that wiring of terminal S1, S2 and SIC is correct and the safety stop input signal source such as a safety relay module is operating properly. Refer to the Safety stop function instruction manual for causes and countermeasures. (Please contact your sales representative for the manual.)<br>• When not using the safety stop function, short across terminals S1 and PC and across S2 and PC with shorting wires. (Refer to page 2-54.) | | | |

| | | | | |
|---|---|---|---|---|
| **Operation panel indication** | **E.PBT** | E. PbT | **FR-PU07** | **Fault** |
| | **E.13** | E. 13 | | **Fault 13** |
| **Name** | Internal circuit fault | | | |
| **Description** | The inverter trips when an internal circuit fault occurs. | | | |
| **Corrective action** | Please contact your sales representative. | | | |

| | | | | |
|---|---|---|---|---|
| **Operation panel indication** | **E.OS** | E. OS | **FR-PU07** | **E.OS** |
| **Name** | Overspeed occurrence | | | |
| **Description** | The inverter trips when the motor speed exceeds the Pr. 374 "Overspeed detection level" under encoder feedback control, Real sensorless vector control, vector control, and PM sensorless vector control. This protective function is not available in the initial status. | | | |
| **Check point** | • Check that the Pr. 374 setting is correct.<br>• Check that the number of encoder pulses does not differ from the actual number of Pr. 369 "Number of encoder pulses" (under encoder feedback control or vector control). | | | |
| **Corrective action** | • Set the Pr. 374 correctly.<br>• Set the Pr 369 correctly (under encoder feedback control or vector control). | | | |

| | | | | |
|---|---|---|---|---|
| **Operation panel indication** | **E.OSD** Vector | E. OSd | **FR-PU07** | **E.OSd** |
| **Name** | Speed deviation excess detection | | | |
| **Description** | • The inverter trips if the motor speed is increased or decreased under the influence of the load etc. during vector control with Pr. 285 "Speed deviation excess detection frequency" set and cannot be controlled in accordance with the speed command value.<br>• If the motor is accelerated against the stop command accidentally, the deceleration check function (Pr. 690) is activated to stop the inverter output. | | | |
| **Check point** | • Check that the values of Pr. 285 and Pr. 853 "Speed deviation time" are correct.<br>• Check for sudden load change.<br>• Check that the number of encoder pulses does not differ from the actual number of Pr. 369 "Number of encoder pulses". | | | |
| **Corrective action** | • Set Pr. 285 and Pr. 853 correctly.<br>• Keep the load stable.<br>• Set Pr. 369 correctly. | | | |

| | | | | |
|---|---|---|---|---|
| **Operation panel indication** | **E.ECT** | E. ECT | **FR-PU07** | **E.ECT** |
| **Name** | Signal loss detection | | | |
| **Description** | The inverter trips when the encoder signal is shut off under orientation control, encoder feedback control or vector control. This protective function is not available in the initial status. | | | |
| **Check point** | • Check for the encoder signal loss.<br>• Check that the encoder specifications are correct.<br>• Check for a loose connector.<br>• Check that the switch setting of FR-A8AP (option) is correct.<br>• Check that the power is supplied to the encoder. Alternatively, check that the power is not supplied to the encoder later than the inverter.<br>• Check that the voltage of the power supplied to the encoder is the same as the encoder output voltage. | | | |
| **Corrective action** | • Remedy the signal loss.<br>• Use an encoder that meets the specifications.<br>• Make connection securely.<br>• Make a switch setting of FR-A8AP (option) correctly. (Refer to page 2-63.)<br>• Supply the power to the encoder. Or supply the power to the encoder at the same time when the power is supplied to the inverter.<br>If the power is supplied to the encoder after sent to the inverter, check that the encoder signal is properly sent and set "0 (initial value)" in Pr. 376 "Encoder signal loss detection enable/disable selection" to disable signal loss detection.<br>• Make the voltage of the power supplied to the encoder the same as the encoder output voltage. | | | |

| | | | | |
|---|---|---|---|---|
| **Operation panel indication** | **E.OD** Vector | E. Od | **FR-PU07** | **E.Od** |
| **Name** | Excessive position fault | | | |
| **Description** | The inverter trips when the difference between the position command and position feedback exceeds Pr. 427 "Excessive level error" under position control. | | | |
| **Check point** | • Check that the position detecting encoder mounting orientation matches the parameter.<br>• Check that the load is not large.<br>• Check that the Pr. 427, Pr. 369 "Number of encoder pulses" settings are correct. | | | |
| **Corrective action** | • Check the parameters.<br>• Reduce the load.<br>• Set Pr. 427, Pr. 369 correctly. | | | |

| | | | | |
|---|---|---|---|---|
| **Operation panel indication** | **E.MB1 to E.MB7** | E. Mb 1 to E. Mb 7 | **FR-PU07** | **E.MB1 Fault to E.MB7 Fault** |
| **Name** | Brake sequence fault | | | |
| **Description** | The inverter trips when a sequence error occurs during use of the brake sequence function (Pr. 278 to Pr. 285). This protective function is not available in the initial status. (The brake sequence function is invalid.) (For the details of fault record, refer to page 5-469.) | | | |
| **Check point** | Find the cause of the fault occurrence. | | | |
| **Corrective action** | Check the set parameters and perform wiring properly. | | | |

| | | | | |
|---|---|---|---|---|
| **Operation panel indication** | **E.EP** Vector | E. EP | **FR-PU07** | **E.EP** |
| **Name** | Encoder phase fault | | | |
| **Description** | The inverter trips when the rotation command of the inverter differs from the actual motor rotation direction detected from the encoder during offline auto tuning. This protective function is not available in the initial status. | | | |
| **Check point** | • Check for mis-wiring of the encoder cable.<br>• Check if the Pr. 359 "Encoder rotation direction" setting is incorrect. | | | |
| **Corrective action** | • Perform connection and wiring securely.<br>• Change the Pr. 359 setting. | | | |

| | | | | |
|---|---|---|---|---|
| **Operation panel indication** | **E.IAH** | E. 1 AH | **FR-PU07** | **Fault** |
| **Name** | Abnormal internal temperature (IP55 compatible models only) | | | |
| **Description** | The inverter trips when the inverter internal temperature reaches the specified value or higher. | | | |
| **Check point** | • Check for too high surrounding air temperature.<br>• Check if the internal air circulation fan or the cooling fan stops due to a fault. | | | |
| **Corrective action** | • Install an inverter suitable for the installation environment. (Refer to the Instruction Manual (Hardware) of the FR-A806.)<br>• Replace the internal air circulation fan or the cooling fan. | | | |

| | | | | |
|---|---|---|---|---|
| **Operation panel indication** | **E.LCI** | E. LCI | **FR-PU07** | **Fault** |
| **Name** | 4 mA input fault | | | |
| **Description** | The inverter trips when the analog input current is 2 mA or less for the time set in Pr. 778 "4 mA input check filter". This function is available when Pr. 573 "4 mA input check selection" = "2 or 3". (Refer to page 5-386.) This function is not available in the initial status. | | | |
| **Check point** | • Check for a break in the wiring for the analog current input.<br>• Check that the Pr. 778 setting is not too short. | | | |
| **Corrective action** | • Check the wiring for the analog current input.<br>• Set the Pr. 778 setting larger. | | | |

| | | | | |
|---|---|---|---|---|
| **Operation panel indication** | **E.PCH** | E. PCH | **FR-PU07** | **Fault** |
| **Name** | Pre-charge fault | | | |
| **Description** | • The inverter trips when the pre-charge time exceeds Pr. 764 "Pre-charge time limit".<br>• The inverter trips when the measured value exceeds Pr. 763 "Pre-charge upper detection level" during pre-charging.<br>• This function is available when Pr. 764 and Pr. 763 are set. This protective function is not available in the initial status. | | | |
| **Check point** | • Check that the Pr. 764 setting is not too short.<br>• Check that the Pr. 763 setting is not too small.<br>• Check that the Pr. 127 "PID control automatic switchover frequency" setting is not too low.<br>• Check for a break in the connection to the pump. | | | |
| **Corrective action** | • Set the Pr. 764 setting longer.<br>• Set the Pr. 763 setting larger.<br>• Set the Pr. 127 setting higher.<br>• Check the connection to the pump. | | | |

| | | | | |
|---|---|---|---|---|
| **Operation panel indication** | **E.PID** | E. PId | **FR-PU07** | **Fault**<br>**PID Signal Error** |
| **Name** | PID signal fault | | | |
| **Description** | The inverter trips if the measured value exceeds the PID upper limit or PID lower limit parameter setting, or the absolute deviation value exceeds the PID deviation parameter setting during PID control.<br>Set this function in Pr. 131 "PID upper limit", Pr. 132 "PID lower limit", Pr. 553 "PID deviation limit", and Pr. 554 "PID signal operation selection". (Refer to page 5-504.) This protective function is not available in the initial status. | | | |
| **Check point** | • Check the meter for a failure or break.<br>• Check that the parameter settings are correct. | | | |
| **Corrective action** | • Check that the meter has no failure or break.<br>• Set the parameters correctly. | | | |

| | | | | |
|---|---|---|---|---|
| **Operation panel indication** | **E. 1 to E. 3** | E. 1 to E. 3 | **FR-PU07** | **Fault 1 to Fault 3** |
| **Name** | Option fault | | | |
| **Description** | The inverter trips when a contact fault is found between the inverter and the plug-in option, or when the communication option is not connected to the connector 1.<br>Appears when the switch for manufacturer setting of the plug-in option is changed. | | | |
| **Check point** | • Check that the plug-in option is plugged into the connector properly.<br>(1 to 3 indicate connector numbers for connection of options.)<br>• Check for excessive noise around the inverter.<br>• Check if the communication option is connected to the connector 2 or 3. | | | |
| **Corrective action** | • Connect the plug-in option securely.<br>• Take measures against noises if there are devices producing excess electrical noises around the inverter.<br>If the situation does not improve after taking the above measure, please contact your sales representative.<br>• Connect the communication option to the connector 1.<br>• Set the switch on the plug-in option, which is for manufacturer setting, back to the initial setting. (Refer to the Instruction Manual of each option.) | | | |

| | | | | |
|---|---|---|---|---|
| **Operation panel indication** | **E.11** Sensorless | E. 11 | **FR-PU07** | **Fault 11** |
| **Name** | Opposite rotation deceleration fault | | | |
| **Description** | The speed may not decelerate during low speed operation if the rotation direction of the speed command and the estimated speed differ when the rotation is changing from forward to reverse or from reverse to forward during torque control under Real sensorless vector control. The inverter trips when overload occurs due to the un-switched rotation direction. This protective function is not available in the initial status (V/F control). (This function is only available under Real sensorless vector control.) | | | |
| **Check point** | • Check that the rotation direction is not switched from forward to reverse rotation (or from reverse to forward) during torque control under Real sensorless vector control. | | | |
| **Corrective action** | • Prevent the motor from switching the rotation direction from forward to reverse (or from reverse to forward) during torque control under Real sensorless vector control.<br>• Please contact your sales representative. | | | |

**NOTES**

If protective functions with indication of "Fault" are activated when using the FR-PU07, "ERR" appears in the faults history of FR-PU07.

If faults other than the above appear, contact your sales representative.

# 6.6 Check first when you have a trouble

For Real sensorless vector control and vector control, also refer to the troubleshooting on page 5-104 (speed control), page 5-143 (torque control), and page 5-177 (position control).

**NOTE** If the cause is still unknown after every check, it is recommended to initialize the parameters, set the required parameter values and check again.

## 6.6.1 Motor does not start

| Check points | Possible cause | Countermeasure | Refer to page |
|---|---|---|---|
| Main Circuit | Appropriate power supply voltage is not applied.<br>(Operation panel display is not provided.) | Power on a molded case circuit breaker (MCCB), an earth leakage circuit breaker (ELB), or a magnetic contactor (MC). | — |
| | | Check for the decreased input voltage, input phase loss, and wiring. | — |
| | | If only the control power is ON when using a separate power source for the control circuit, turn ON the main circuit power. | 2-48 |
| | Motor is not connected properly. | Check the wiring between the inverter and the motor.<br>If the electronic bypass function is active, check the wiring of the magnetic contactor (MC) between the inverter and the motor. | 2-26 |
| | The jumper across P/+ to P1 is disconnected.<br>A DC reactor (FR-HEL) is not connected. | Securely fit a jumper across P/+ and P1.<br>When using a DC reactor (FR-HEL), remove the jumper across P/+ to P1, and then connect the DC reactor.<br>Connect the DC reactor securely when required according to the capacity. | 2-26,<br>2-88 |
| Input signal | Start signal is not input. | Check the start command source, and input a start signal.<br>PU operation mode: FWD key/REV key<br>External operation mode: STF/STR signal | 5-257 |
| | Both the forward and reverse rotation start signals (STF, STR) are input simultaneously. | Turn ON only one of the forward and reverse rotation start signals (STF or STR).<br>When the STF and STR signals are turned ON simultaneously in the initial setting, a stop command is given. | 2-36 |
| | Frequency command is zero. (FWD or REV LED on the operation panel is flickering.) | Check the frequency command source and enter a frequency command. | 5-257 |
| | AU signal is not ON when terminal 4 is used for frequency setting. (FWD or REV LED on the operation panel is flickering.) | Turn ON the AU signal.<br>Turning ON the AU signal activates terminal 4 input. | 5-376 |
| | Output stop signal (MRS) or reset signal (RES) is ON. (FWD or REV LED on the operation panel is flickering.) | Turn MRS or RES signal OFF.<br>Inverter starts the operation with a given start command and a frequency command after turning OFF MRS or RES signal.<br>Before turning OFF, ensure the safety. | 2-36 |

| Check points | Possible cause | Countermeasure | Refer to page |
|---|---|---|---|
| Input signal | CS signal is OFF while the automatic restart after instantaneous power failure function is selected (Pr. 57 "Restart coasting time" ≠ 9999). (FWD or REV LED on the operation panel is flickering.) | Turn ON the automatic restart after instantaneous power failure/flying start (CS) signal.<br>When the CS signal is assigned to an input terminal, automatic restart operation is enabled when the CS signal is turned ON. | 5-540 |
| | Jumper connector of sink - source is incorrectly selected. (FWD or REV LED on the operation panel is flickering.) | Check that the control logic switchover jumper connector is correctly installed.<br>If it is not installed correctly, input signal is not recognized. | 2-40 |
| | Wiring of encoder is incorrect.<br>(Under encoder feedback control or vector control) | Check the wiring of encoder. | 2-67 |
| | Voltage/current input switch is not correctly set for analog input signal (0 to 5 V/0 to 10 V, 4 to 20 mA). (FWD or REV LED on the operation panel is flickering.) | Set Pr. 73 "Analog input selection", Pr. 267 "Terminal 4 input selection", and a voltage/current input switch correctly, then input an analog signal in accordance with the setting. | 5-376 |
| | STOP/RESET key was pressed.<br>(Operation panel indication is "PS".) | During the External operation mode, check the method of restarting from a STOP/RESET key input stop from PU. | 5-186, 6-14 |
| | For the separated converter type, terminals RDA and SE of the converter unit are not connected to terminals MRS (X10 signal) and SD (PC for source logic) of the inverter respectively. | Check for the wiring. | Refer to the Instruction Manual (Hardware) of the FR-A802. |
| | Two-wire or three-wire type connection is incorrect. | Check the wiring.<br>Use the Start self-holding selection (STP (STOP)) signal when the three-wire type is used. | 5-417 |
| Parameter Setting | Under V/F control, Pr. 0 "Torque boost" setting is improper. | Increase the Pr. 0 setting by 0.5% increments while observing the rotation of a motor.<br>If that makes no difference, decrease the setting. | 5-629 |
| | Pr. 78 "Reverse rotation prevention selection" is set. | Check the Pr. 78 setting.<br>Set Pr. 78 when you want to limit the motor rotation to only one direction. | 5-273 |
| | Pr. 79 "Operation mode selection" setting is incorrect. | Select the operation mode which corresponds with input methods of start command and frequency command. | 5-255 |
| | Bias and gain (calibration parameter C2 to C7) settings are improper. | Check the bias and gain (calibration parameter C2 to C7) settings. | 5-388 |
| | Pr. 13 "Starting frequency" setting is greater than the running frequency. | Set running frequency higher than Pr.13.<br>The inverter does not start if the frequency setting signal is less than the value set in Pr. 13. | 5-243, 5-245 |
| | Frequency settings of various running frequency (such as multi-speed operation) are zero.<br>Especially, Pr. 1 "Maximum frequency" is zero. | Set the frequency command according to the application.<br>Set Pr. 1 higher than the actual frequency used. | 5-182, 5-300 |
| | Pr. 15 "Jog frequency" is lower than Pr. 13 "Starting frequency" for JOG operation. | Set Pr. 15 higher than Pr. 13. | 5-243, 5-245, 5-278 |
| | The Pr. 359 "Encoder rotation direction" setting is incorrect under encoder feedback control or under vector control. | If the "REV" on the operation panel is lit even though the forward-rotation command is given, set Pr. 359 = "1". | 2-72, 5-669 |
| | Operation mode and a writing device do not correspond. | Check Pr. 79 "Operation mode selection", Pr. 338 "Communication operation command source", Pr. 339 "Communication speed command source", Pr. 550 "NET mode operation command source selection" and Pr. 551"PU mode operation command source selection", and select an operation mode suitable for the purpose. | 5-255, 5-266 |

| Check points | Possible cause | Countermeasure | Refer to page |
|---|---|---|---|
| Parameter Setting | Start signal operation selection is set by Pr. 250 "Stop selection". | Check the Pr. 250 setting and the connection of STF and STR signals. | 5-417 |
| | The motor has decelerated to a stop when power failure deceleration stop function is selected. | When power is restored, ensure the safety, and turn OFF the start signal once, then turn ON again to restart.<br>When Pr. 261 "Power failure stop selection" = "2 or 12", the motor automatically restarts after the power is restored. | 5-558 |
| | Performing auto tuning. | When offline auto tuning ends, press STOP/RESET key of the operation panel for the PU operation. For the External operation, turn OFF the start signal (STF or STR).<br>This operation resets the offline auto tuning, and the PU's monitor display returns to the normal indication.<br>(Without this operation, next operation cannot be started.) | 5-66, 5-553 |
| | The automatic restart after instantaneous power failure function or power failure stop function has been activated.<br>(Performing overload operation during input phase loss may cause voltage insufficiency, and that may result in detection of power failure.) | Set Pr. 872 "Input phase loss protection selection" ="1" (input phase failure protection active).<br>Disable the automatic restart after instantaneous power failure function and power failure stop function.<br>Reduce the load.<br>Increase the acceleration time if the function was activated during acceleration. | 5-296, 5-540, 5-549, 5-558 |
| | The motor test operation is selected under vector control or PM sensorless vector control. | Check the Pr. 800 "Control method selection" setting. | 5-55 |
| | When the FR-HC2, FR-CV, or FR-CC2 is used, the input logic setting of the X10 signal is incorrect. | Set Pr. 599 = "0" (initial value for standard models and IP55 compatible models) to use the X10 signal with the NO contact input specification, and Pr. 599 = "1" (initial value for separated converter types) to use the X10 signal with the NC contact input specification. | 5-652 |
| Load | Load is too heavy. | Reduce the load. | — |
| | Shaft is locked. | Inspect the machine (motor). | — |

## 6.6.2 Motor or machine is making abnormal acoustic noise

| Check points | Possible cause | Countermeasure | Refer to page |
|---|---|---|---|
| Input signal | Disturbance due to EMI when frequency or torque command is given from analog input (terminal 1, 2, 4). | Take countermeasures against EMI. | 3-1 |
| Parameter Setting | | Increase the Pr. 74 "Input filter time constant" if steady operation cannot be performed due to EMI. | 5-386 |
| Parameter Setting | No carrier frequency noises (metallic noises) are generated. | In the initial setting, Pr. 240 "Soft-PWM operation selection" is enabled to change motor noise to an unoffending complex tone. Therefore, no carrier frequency noises (metallic noises) are generated.<br>Set Pr. 240 = "0" to disable this function. | 5-211 |
| | The motor noise increases due to activation of the carrier frequency automatic reduction function when the motor is driven overloaded. | Reduce the load.<br>Disable the automatic reduction function by setting Pr. 260 "PWM frequency automatic switchover" = "0". | 5-211 |
| | Resonance occurs. (output frequency) | Set Pr. 31 to Pr. 36, Pr. 552 (Frequency jump).<br>When it is desired to avoid resonance attributable to the natural frequency of a mechanical system, these parameters allow resonant frequencies to be jumped. | 5-302 |
| | Resonance occurs. (carrier frequency) | Change Pr. 72 "PWM frequency selection" setting.<br>Changing the PWM carrier frequency produces an effect on avoiding the resonance frequency of a mechanical system or a motor. | 5-211 |
| | | Set a notch filter. | 5-118 |
| | Auto tuning is not performed under Advanced magnetic flux vector control, Real sensorless vector control, or vector control. | Perform offline auto tuning. | 5-66 |
| | Gain adjustment during PID control is insufficient. | To stabilize the measured value, change the proportional band (Pr. 129) to a larger value, the integral time (Pr. 130) to a slightly longer time, and the differential time (Pr. 134) to a slightly shorter time.<br>Check the calibration of set point and measured value. | 5-504 |
| | The gain is too high under Real sensorless vector control, vector control, or PM sensorless vector control. | During speed control, check the setting of Pr. 820 "Speed control P gain 1". | 5-66 |
| | | During torque control, check the setting of Pr. 824 "Torque control P gain 1". | 5-141 |
| Others | Mechanical looseness | Adjust machine/equipment so that there is no mechanical looseness. | — |
| | Contact the motor manufacturer. | | |
| Motor | Operating with output phase loss | Check the motor wiring. | — |

### 6.6.3 Inverter generates abnormal noise

| Check points | Possible cause | Countermeasure | Refer to page |
|---|---|---|---|
| Fan | Fan cover was not correctly installed when a cooling fan was replaced. | Install a fan cover correctly. | 7-7 |

### 6.6.4 Motor generates heat abnormally

| Check points | Possible cause | Countermeasure | Refer to page |
|---|---|---|---|
| Motor | Motor fan is not working<br>(Dust is accumulated.) | Clean the motor fan.<br>Improve the environment. | — |
| | Phase to phase insulation of the motor is insufficient. | Check the insulation of the motor. | — |
| Main Circuit | The inverter output voltage (U, V, W) are unbalanced. | Check the output voltage of the inverter.<br>Check the insulation of the motor. | 7-7 |
| Parameter Setting | Pr. 71 "Applied motor" setting is incorrect. | Check the Pr. 71 "Applied motor" setting. | 5-421 |
| — | Motor current is large. | Refer to "6.6.11 Motor current is too large". | 6-42 |

### 6.6.5 Motor rotates in the opposite direction

| Check points | Possible cause | Countermeasure | Refer to page |
|---|---|---|---|
| Main Circuit | Phase sequence of output terminals U, V and W is incorrect. | Connect phase sequence of the output cables (terminal U, V, W) to the motor correctly. | 2-26 |
| Input signal | The start signals (forward rotation, reverse rotation) are connected improperly. | Check the wiring.<br>(STF: forward rotation, STR: reverse rotation) | 2-36,<br>5-417 |
| | The polarity of the frequency command is negative during the polarity reversible operation set by Pr. 73 "Analog input selection". | Check the polarity of the frequency command. | 5-376 |
| Input signal<br>Parameter Setting | Torque command is negative during torque control under vector control. | Check the torque command value. | 5-129 |

### 6.6.6 Speed greatly differs from the setting

| Check points | Possible cause | Countermeasure | Refer to page |
|---|---|---|---|
| Input signal | Frequency setting signal is incorrectly input. | Measure the input signal level. | — |
| | The input signal lines are affected by external EMI. | Take countermeasures against EMI, such as using shielded wires for input signal lines. | 3-6 |
| Parameter Setting | Pr. 1 "Maximum frequency," Pr. 2 "Minimum frequency", Pr. 18 "High speed maximum frequency", and calibration parameter C2 to C7 settings are improper. | Check the settings of Pr. 1, Pr. 2, and Pr. 18. | 5-300 |
| | | Check the calibration parameter C2 to C7 settings. | 5-388 |
| | Pr. 31 to Pr. 36, Pr. 552 (frequency jump) settings are improper. | Narrow down the range of frequency jump. | 5-302 |
| Load | Stall prevention (torque limit) function is activated due to a heavy load. | Reduce the load weight. | — |
| Parameter Setting | | Set Pr. 22 "Stall prevention operation level" (torque limit level) higher according to the load. (If Pr. 22 is set too high, an overcurrent trip (E.OC□) is likely to occur.) | 2-36, 5-304 |
| Motor | | Check the capacities of the inverter and the motor. | — |

### 6.6.7 Acceleration/deceleration is not smooth

| Check points | Possible cause | Countermeasure | Refer to page |
|---|---|---|---|
| Parameter Setting | Acceleration/deceleration time is too short. | Increase the acceleration/deceleration time. | 5-225 |
| | Torque boost (Pr. 0, Pr. 46, Pr. 112) setting is improper under V/F control, so the stall prevention function is activated. | Increase/decrease the Pr. 0 "Torque boost" setting value by 0.5% increments so that stall prevention does not occur. | 5-629 |
| | The base frequency does not match the motor characteristics. | Under V/F control, set Pr. 3 "Base frequency", Pr. 47 "Second V/F (base frequency)", and Pr. 113 "Third V/F (base frequency)". | 5-631 |
| | | Under vector control, set Pr. 84 "Rated motor frequency". | 5-55 |
| | Regeneration avoidance operation is performed | If the frequency becomes unstable during regeneration avoidance operation, decrease the setting of Pr. 886 "Regeneration avoidance voltage gain". | 5-662 |
| Load | Stall prevention (torque limit) function is activated due to a heavy load. | Reduce the load weight. | — |
| Parameter Setting | | Set Pr. 22 "Stall prevention operation level" (torque limit level) higher according to the load. (If Pr. 22 is set too high, an overcurrent trip (E.OC□) is likely to occur.) | 2-36, 5-304 |
| Motor | | Check the capacities of the inverter and the motor. | — |

## 6.6.8 Speed varies during operation

Under Advanced magnetic flux vector control, Real sensorless vector control, vector control, and encoder feedback control, the output frequency varies between 0 and 2 Hz as the load fluctuates. This is a normal operation and not a fault.

| Check points | Possible cause | Countermeasure | Refer to page |
|---|---|---|---|
| Load | Load varies during an operation. | Select Advanced magnetic flux vector control, Real sensorless vector control, vector control, or encoder feedback control. | 5-55, 5-669 |
| Input signal | Frequency setting signal is varying. | Check the frequency setting signal. | — |
| | The frequency setting signal is affected by EMI. | Set filter to the analog input terminal using Pr. 74 "Input filter time constant", Pr. 822 "Speed setting filter 1". | 5-386 |
| | | Take countermeasures against EMI, such as using shielded wires for input signal lines. | 3-1 |
| | Malfunction is occurring due to the undesirable current generated when the transistor output unit is connected. | Use terminal PC (terminal SD when source logic) as a common terminal to prevent a malfunction caused by undesirable current. | 2-41 |
| | Multi-speed command signal is chattering. | Take countermeasures to suppress chattering. | — |
| | Feedback signal from the encoder is affected by EMI. | Place the encoder cable far from the EMI source such as main circuit and power supply voltage. Earth (ground) the shield of the encoder cable to the enclosure using a metal P-clip or U-clip. | 2-67 |
| Parameter Setting | Fluctuation of power supply voltage is too large. | Under V/F control, change the Pr. 19 "Base frequency voltage" setting (approximately by 3%). | 5-631 |
| | Pr. 80 "Motor capacity" and Pr. 81 "Number of motor poles" are not appropriate for the motor capacity under Advanced magnetic flux vector control, Real sensorless vector control, vector control, or PM sensorless vector control. | Check the settings of Pr. 80 and Pr. 81. | 5-55 |
| | Wiring length exceeds 30 m when Advanced magnetic flux vector control, Real sensorless vector control, vector control, or PM sensorless vector control is selected. | Perform offline auto tuning. | 5-66 |
| | Under V/F control, wiring is too long and a voltage drop occurs. | In the low-speed range, set 0.5% in Pr. 0 "Torque boost". | 5-629 |
| | | Change the control method to Advanced magnetic flux vector control or Real sensorless vector control. | 5-55 |
| | Hunting occurs by the generated vibration, for example, when structural rigidity at load side is insufficient. | Disable automatic control functions, such as the energy saving operation, fast-response current limit operation, torque limit, regeneration avoidance function, Advanced magnetic flux vector control, Real sensorless vector control, vector control, encoder feedback control, droop control, stall prevention, online auto tuning, notch filter, and orientation control.<br>Under PID control, set smaller values to Pr. 129 "PID proportional band" and Pr. 130 "PID integral time".<br>Adjust so that the control gain decreases and the level of safety increases. | — |
| | | Change Pr. 72 "PWM frequency selection" setting. | 5-211 |

### 6.6.9 Operation mode is not changed properly

| Check points | Possible cause | Countermeasure | Refer to page |
|---|---|---|---|
| Input signal | Start signal (STF or STR) is ON. | Check that the STF and STR signals are off. When either is ON, the operation mode cannot be changed. | 2-36, 5-417 |
| Parameter Setting | Pr. 79 "Operation mode selection" setting is improper. | When the Pr. 79 is set to "0 (initial value)", the operation mode is the External operation mode at power ON. To switch to the PU operation mode, press PU/EXT key on the operation panel (press PU key on the parameter unit (FR-PU07)). At other settings (1 to 4, 6, 7), the operation mode is limited accordingly. | 5-255 |
| | Operation mode and a writing device do not correspond. | Check Pr. 79 "Operation mode selection", Pr. 338 "Communication operation command source", Pr. 339 "Communication speed command source", Pr. 550 "NET mode operation command source selection" and Pr. 551 "PU mode operation command source selection", and select an operation mode suitable for the purpose. | 5-255, 5-266 |

### 6.6.10 Operation panel (FR-DU08) display is not operating

| Check points | Possible cause | Countermeasure | Refer to page |
|---|---|---|---|
| Main Circuit Control Circuit | Power is not input. | Input the power. | 2-21 |
| Front cover | Operation panel is not properly connected to the inverter. | Check if the inverter front cover is installed securely. | 2-7 |

### 6.6.11 Motor current is too large

| Check points | Possible cause | Countermeasure | Refer to page |
|---|---|---|---|
| Parameter Setting | Torque boost (Pr. 0, Pr. 46, Pr. 112) setting is improper under V/F control, so the stall prevention function is activated. | Increase/decrease the Pr. 0 "Torque boost" setting value by 0.5% increments so that stall prevention does not occur. | 5-629 |
| | V/F pattern is improper when V/F control is performed. (Pr. 3, Pr. 14, Pr. 19) | Set rated frequency of the motor to Pr. 3 "Base frequency". Use Pr. 19 "Base frequency voltage" to set the base voltage (for example, rated motor voltage). | 5-631 |
| | | Change Pr. 14 "Load pattern selection" according to the load characteristic. | 5-634 |
| | Stall prevention (torque limit) function is activated due to a heavy load. | Reduce the load weight. | — |
| | | Pr. 22 "Stall prevention operation level (Torque limit level)" | 5-83, 5-304 |
| | | Check the capacities of the inverter and the motor. | — |
| | Offline auto tuning is not performed under Advanced magnetic flux vector control, Real sensorless vector control, or vector control. | Perform offline auto tuning. | 5-66 |
| | When PM sensorless vector control is selected for an IPM motor other than MM-CF, and offline auto tuning is not performed. | Perform offline auto tuning for an IPM motor. | 5-440 |

## 6.6.12 Speed does not accelerate

| Check points | Possible cause | Countermeasure | Refer to page |
|---|---|---|---|
| Input signal | Start command and frequency command are chattering. | Check if the start command and the frequency command are correct. | — |
| | The wiring length used for analog frequency command is too long, and it is causing a voltage (current) drop. | Perform Analog input bias/gain calibration. | 5-388 |
| | The input signal lines are affected by external EMI. | Take countermeasures against EMI, such as using shielded wires for input signal lines. | 3-6 |
| Parameter Setting | Pr. 1 "Maximum frequency", Pr. 2 "Minimum frequency", Pr. 18 "High speed maximum frequency", and calibration parameter C2 to C7 settings are improper. | Check the settings of Pr. 1 and Pr. 2 and set Pr. 18. | 5-300 |
| | | Check the calibration parameter C2 to C7 settings. | 5-388 |
| | The maximum voltage (current) input value is not set during the External operation. (Pr. 125, Pr. 126, Pr. 18) | Check the settings of Pr. 125 "Terminal 2 frequency setting gain frequency" and Pr. 126 "Terminal 4 frequency setting gain frequency". To operate at 120 Hz or higher, set Pr. 18 "High speed maximum frequency". | 5-300, 5-388 |
| | Torque boost (Pr. 0, Pr. 46, Pr. 112) setting is improper under V/F control, so the stall prevention function is activated. | Increase/decrease the Pr. 0 "Torque boost" setting value by 0.5% increments so that stall prevention does not occur. | 5-629 |
| | V/F pattern is improper when V/F control is performed. (Pr. 3, Pr. 14, Pr. 19) | Set rated frequency of the motor to Pr. 3 "Base frequency". Use Pr. 19 "Base frequency voltage" to set the base voltage (for example, rated motor voltage). | 5-631 |
| | | Change Pr. 14 "Load pattern selection" according to the load characteristic. | 5-634 |
| | Stall prevention (torque limit) function is activated due to a heavy load. | Reduce the load weight. | — |
| | | Set Pr. 22 "Stall prevention operation level" (torque limit level) higher according to the load. (If Pr. 22 is set too high, an overcurrent trip (E.OC□) is likely to occur.) | 5-83, 5-304 |
| | | Check the capacities of the inverter and the motor. | — |
| | Auto tuning is not performed under Advanced magnetic flux vector control, Real sensorless vector control, or vector control. | Perform offline auto tuning. | 5-66 |
| | The setting of pulse train input is improper. | Check the specification of the pulse generator (open collector output or complementary output) and check the adjustment of the pulse train and frequency (Pr. 385 "Frequency for zero input pulse" and Pr. 386 "Frequency for maximum input pulse"). | 5-274 |
| | During PID control, output frequency is automatically controlled to make measured value = set point. | | 5-504 |
| Main Circuit | Brake resistor is connected across terminals P/+ and P1 or across P1 and PR by mistake. | Connect an optional brake resistor (FR-ABR) across terminals P/+ and PR. | 2-76 |

### 6.6.13 Unable to write parameter setting

| Check points | Possible cause | Countermeasure | Refer to page |
|---|---|---|---|
| Input signal | Operation is being performed (signal STF or STR is ON). | Stop the operation.<br>When Pr. 77 "Parameter write selection" = "0" (initial value), write is enabled only during a stop. | 5-195 |
| Parameter Setting | You are attempting to set the parameter in the External operation mode. | Choose the PU operation mode.<br>Or, set Pr. 77 "Parameter write selection" = "2" to enable parameter write regardless of the operation mode. | 5-195, 5-255 |
| | Parameter write is disabled by the Pr. 77 "Parameter write selection" setting. | Check the Pr. 77 setting. | 5-195 |
| | Key lock mode is enabled by the Pr. 161 "Frequency setting/key lock operation selection" setting. | Check the Pr. 161 setting. | 5-190 |
| | Operation mode and a writing device do not correspond. | Check Pr. 79, Pr. 338 ", Pr. 339, Pr. 550 and Pr. 551, and select an operation mode suitable for the purpose. | 5-255, 5-266 |
| | • Pr. 72 "PWM frequency selection" was attempted to be set to "25".<br>• Alternatively, PM sensorless vector control was attempted while Pr. 72 = "25". | Pr. 72 = "25" cannot be set under PM sensorless vector control. (A sine wave filter (MT-BSL/BSC) cannot be used under PM sensorless vector control.) | 5-211 |

### 6.6.14 Power lamp is not lit

| Check points | Possible cause | Countermeasure | Refer to page |
|---|---|---|---|
| Main Circuit, Control Circuit | Wiring or installation is improper. | Check for the wiring and the installation.<br>Power lamp is lit when power is supplied to the control circuit (R1/L11, S1/L21). | 2-25 |

# 7 Precautions for maintenance and inspection

The inverter is a static unit mainly consisting of semiconductor devices. Daily inspection must be performed to prevent any fault from occurring due to the adverse effects of the operating environment, such as temperature, humidity, dust, dirt and vibration, changes in the parts with time, service life, and other factors.

**WARNING:**

***The bus capacitor discharge time is 10 minutes. Before starting wiring or inspection, switch power off, wait for more than 10 minutes, and then make sure that the voltage across the main circuit terminals P/+ and N/- of the inverter is not more than 30 VDC using a tester, etc., to avoid a hazard of electrical shock.***

## 7.1 Inspection item

### 7.1.1 Daily inspection

Basically, check for the following faults during operation.

- Motor operation fault
- Improper installation environment
- Cooling system fault
- Abnormal vibration, abnormal noise
- Abnormal overheat, discoloration

### 7.1.2 Periodic inspection

Check the areas inaccessible during operation and requiring periodic inspection.

Consult us for periodic inspection.

| | |
|---|---|
| ● Check and clean the cooling system. | Clean the air filter, etc. |
| ● Check the tightening and retighten. | The screws and bolts may become loose due to vibration, temperature changes, etc. Check and tighten them.<br>Tighten them according to the specified tightening torque. (Refer to page 2-29.) |

- Check the conductors and insulating materials for corrosion and damage.
- Measure the insulation resistance.
- Check and change the cooling fan and relay.

**NOTE** When using the safety stop function, periodic inspection is required to confirm that safety function of the safety system operates correctly.
For more details, refer to the Safety stop function instruction manual (BCN-A23228-001).

### 7.1.3 Daily and periodic inspection

| Area of inspection | Inspection item | Description | Inspection interval | | Corrective action at fault occurrence | Check by the user |
|---|---|---|---|---|---|---|
| | | | Daily | Periodic ③ | | |
| General | Surrounding environment | Check the surrounding air temperature, humidity, dirt, corrosive gas, oil mist, etc. | ○ | | Improve the environment. | |
| | Overall unit | Check for unusual vibration and noise. | ○ | | Check fault location and retighten. | |
| | | Check for dirt, oil, and other foreign material. ① | ○ | | Clean. | |
| | Power supply voltage | Check that the main circuit voltages and control voltages are normal. ② | ○ | | Inspect the power supply. | |
| Main circuit | General | (1) Check with megger (across main circuit terminals and earth (ground) terminal). | | ○ | Contact the manufacturer. | |
| | | (2) Check for loose screws and bolts. | | ○ | Retighten. | |
| | | (3) Check for overheat traces on the parts. | | ○ | Contact the manufacturer. | |
| | | (4) Check for stain. | | ○ | Clean. | |
| | Conductors, cables | (1) Check conductors for distortion. | | ○ | Contact the manufacturer. | |
| | | (2) Check cable sheaths for breakage and deterioration (crack, discoloration, etc.). | | ○ | Contact the manufacturer. | |
| | Transformer/reactor | Check for unusual odor and abnormal increase of whining sound. | ○ | | Stop the equipment and contact the manufacturer. | |
| | Terminal block | Check for a damage. | | ○ | Stop the equipment and contact the manufacturer. | |
| | Smoothing aluminum electrolytic capacitor | (1) Check for liquid leakage. | | ○ | Contact the manufacturer. | |
| | | (2) Check for safety valve projection and bulge. | | ○ | Contact the manufacturer. | |
| | | (3) Visual check and judge by the life check of the main circuit capacitor. (Refer to page 7-6.) | | ○ | | |
| | Relay/contactor | Check that the operation is normal and no chattering sound is heard. | | ○ | Contact the manufacturer. | |
| | Resistor | (1) Check for crack in resistor insulation. | | ○ | Contact the manufacturer. | |
| | | (2) Check for a break in the cable. | | ○ | Contact the manufacturer. | |

***Tab. 7-1:*** *Daily and periodic inspection (1)*

| Area of inspection | Inspection item | | Description | Inspection interval | | Corrective action at fault occurrence | Check by the user |
|---|---|---|---|---|---|---|---|
| | | | | Daily | Periodic ③ | | |
| Control circuit, protective circuit | Operation check | | (1) Check that the output voltages across phases are balanced while operating the inverter alone. | | ○ | Contact the manufacturer. | |
| | | | (2) Check that no fault is found in protective and display circuits in a sequence protective operation test. | | ○ | Contact the manufacturer. | |
| | Components check | Overall | (1) Check for unusual odor and discoloration. | | ○ | Stop the equipment and contact the manufacturer. | |
| | | | (2) Check for serious rust development. | | ○ | Contact the manufacturer. | |
| | | Aluminum electrolytic capacitor | (1) Check for liquid leakage in a capacitor and deformation trace. | | ○ | Contact the manufacturer. | |
| | | | (2) Visual check and judge by the life check of the control circuit capacitor. (Refer to page 7-6.) | | ○ | | |
| Cooling system | Cooling fan | | (1) Check for unusual vibration and noise. | ○ | | Replace the fan. | |
| | | | (2) Check for loose screws and bolts. | | ○ | Fix with the fan cover fixing screws | |
| | | | (3) Check for stain. | | ○ | Clean. | |
| | Heatsink | | (1) Check for clogging. | | ○ | Clean. | |
| | | | (2) Check for stain. | | ○ | Clean. | |
| Display | Indication | | (1) Check that display is normal. | ○ | | Contact the manufacturer. | |
| | | | (2) Check for stain. | | ○ | Clean. | |
| | Meter | | Check that reading is normal. | ○ | | Stop the equipment and contact the manufacturer. | |
| Load motor | Operation check | | Check for vibration and abnormal increase in operation noise. | ○ | | Stop the equipment and contact the manufacturer. | |

***Tab. 7-1:*** *Daily and periodic inspection (2)*

① Oil component of the heat dissipation grease used inside the inverter may leak out. The oil component, however, is not flammable, corrosive, nor conductive and is not harmful to humans. Wipe off such oil component.

② It is recommended to install a voltage monitoring device for checking the voltage of the power supplied to the inverter.

③ One to two years of periodic inspection cycle is recommended. However, it differs according to the installation environment.
Consult us for periodic inspection.

**CAUTION:**

***Continuous use of a leaked, deformed, or degraded smoothing aluminum electrolytic capacitor (as shown in the table above) may lead to a burst, breakage or fire. Replace such a capacitor without delay.***

## 7.1.4 Checking the inverter and converter modules

### Preparation

- Disconnect the external power supply cables (R/L1, S/L2, T/L3) and motor cables (U, V, W).
- Prepare a tester. (For the resistance measurement, use the 100 Ω range.)

### Checking method

Change the polarity of the tester alternately at the inverter terminals R/L1, S/L2, T/L3, U, V, W, P/+, and N/- and check the electric continuity.

**NOTES**

Before measurement, check that the smoothing capacitor is discharged.

At the time of electric discontinuity, the measured value is almost ∞. When there is an instantaneous electric continuity, due to the smoothing capacitor, the tester may not indicate ∞. At the time of electric continuity, the measured value is several Ω to several tens of Ω. If all measured values are almost the same, although these values are not constant depending on the module type and tester type, the modules are without fault.

### Module device numbers and terminals to be checked

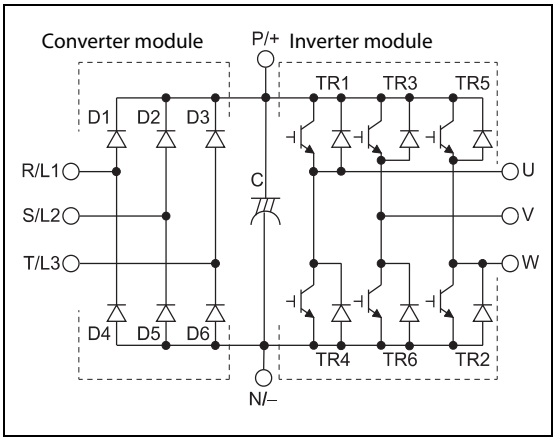


I001305E

***Fig. 7-1:*** *Module device numbers and terminals to be checked*

| | | Tester polarity | | Result | | Tester polarity | | Result |
|---|---|---|---|---|---|---|---|---|
| | | ⊕ | ⊖ | | | ⊕ | ⊖ | |
| Converter module | D1 | R/L1 | P/+ | Discontinuity | D4 | R/L1 | N/– | Continuity |
| | | P/+ | R/L1 | Continuity | | N/– | R/L1 | Discontinuity |
| | D2 | S/L2 | P/+ | Discontinuity | D5 | S/L2 | N/– | Continuity |
| | | P/+ | S/L2 | Continuity | | N/– | S/L2 | Discontinuity |
| | D3 | T/L3 | P/+ | Discontinuity | D6 | T/L3 | N/– | Continuity |
| | | P/+ | T/L3 | Continuity | | N/– | T/L3 | Discontinuity |
| Inverter module | TR1 | U | P/+ | Discontinuity | TR4 | U | N/– | Continuity |
| | | P/+ | U | Continuity | | N/– | U | Discontinuity |
| | TR3 | V | P/+ | Discontinuity | TR6 | V | N/– | Continuity |
| | | P/+ | V | Continuity | | N/– | V | Discontinuity |
| | TR5 | W | P/+ | Discontinuity | TR2 | W | N/– | Continuity |
| | | P/+ | W | Continuity | | N/– | W | Discontinuity |

***Tab. 7-2:*** *Continuity check of the modules*

(Assumes the use of an analog meter.)

### 7.1.5 Cleaning

Always run the inverter in a clean status.

When cleaning the inverter, gently wipe dirty areas with a soft cloth immersed in neutral detergent or ethanol.

**NOTES**

Do not use solvent, such as acetone, benzene, toluene and alcohol, as these will cause the inverter surface paint to peel off.

The display, etc. of the operation panel (FR-DU08) and parameter unit (FR-PU07) are vulnerable to detergent and alcohol. Therefore, avoid using them for cleaning.

## 7.1.6 Replacement of parts

The inverter consists of many electronic parts such as semiconductor devices.

The following parts may deteriorate with age because of their structures or physical characteristics, leading to reduced performance or fault of the inverter. For preventive maintenance, the parts must be replaced periodically.

Use the life check function as a guidance of parts replacement.

| Part name | Estimated lifespan ① | Description |
|---|---|---|
| Cooling fan | 10 years | Replace (as required) |
| Main circuit smoothing capacitor | 10 years ② | Replace (as required) |
| On-board smoothing capacitor | 10 years ② | Replace the board (as required) |
| Relays | — | As required |
| Main circuit fuse (FR-A840-04320(160K) or higher) | 10 years | Replace the fuse (as required) |

***Tab. 7-3:*** *Wearing parts*

① Estimated lifespan for when the yearly average surrounding air temperature is 40 °C. (Without corrosive gas, flammable gas, oil mist, dust and dirt etc.)

② Output current: 80% of the inverter rating

**NOTES** For parts replacement, contact the nearest Mitsubishi FA center.

### Displaying the life of the inverter parts

The inverter diagnoses the main circuit capacitor, control circuit capacitor, cooling fan, and inrush current limit circuit by itself and estimates their lives.

The self-diagnostic warning is output when the life span of each part is near its end. It gives an indication of replacement time.

The life warning output can be used as a guideline for life judgment.

| Parts | Judgment level |
|---|---|
| Main circuit capacitor | 85% of the initial capacity |
| Control circuit capacitor | Estimated remaining life 10% |
| Inrush current limit circuit | Estimated remaining life 10% (Power ON: 100,000 times left) |
| Cooling fan | Less than 50% of the specified speed. ① |

***Tab. 7-4:*** *Guideline for the warning signal output*

① Initial values differ according to the inverter capacity (refer to page 5-217 for details).

**NOTE** Refer to page 5-214 to perform the life check of the inverter parts.

**Replacement procedure of the cooling fan**

The replacement interval of the cooling fan used for cooling the parts generating heat such as the main circuit semiconductor is greatly affected by the surrounding air temperature. When unusual noise and/or vibration are noticed during inspection, the cooling fan must be replaced immediately.

- Removal (FR-A820-00105(1.5K) to 04750(90K), FR-A840-00083(2.2K) to 03610(132K))

① Push the hooks from above and remove the fan cover.

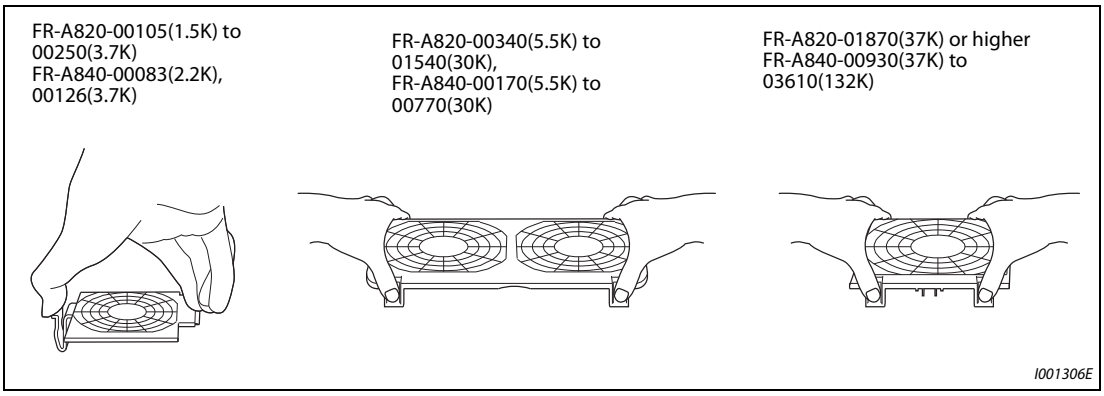


***Fig. 7-2:*** *Removal of the fan cover*

② Disconnect the fan connectors.

③ Remove the fan.

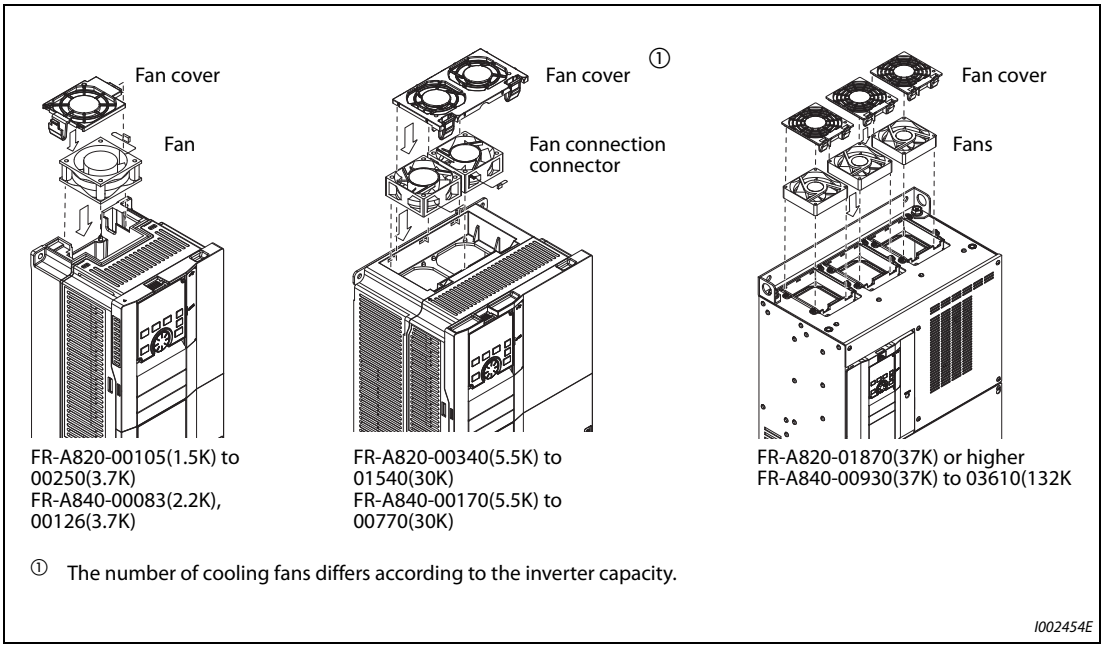


***Fig. 7-3:*** *Removal of the fan*

● Reinstallation (FR-A820-00105(1.5K) to 04750(90K), FR-A840-00083(2.2K) to 03610(132K))

① After confirming the orientation of the fan, reinstall the fan so that the "AIR FLOW" faces up.

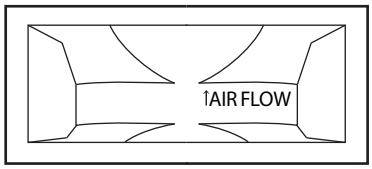


***Fig. 7-4:***
*Orientation of the fan*

I002456E

② Reconnect the fan connectors.

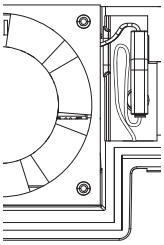

FR-A820-00105(1.5K) to 00250(3.7K),
FR-A840-00083(2.2K), 00126(3.7K)

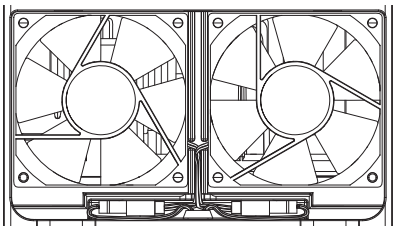

FR-A820-00340(5.5K) to 00770(15K),
FR-A840-00170(5.5K) to 00380(15K)

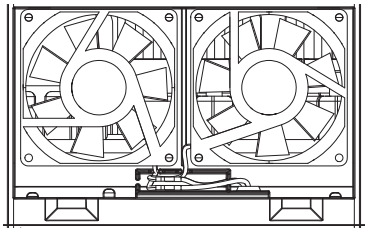

FR-A820-00930(18.5K), 01250(22K),
FR-A840-00470(18.5K), 00620(22K)

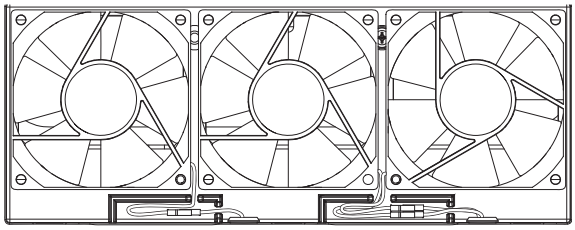

FR-A820-01540(30K), FR-A840-00770(30K)

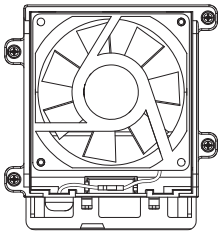

FR-A820-01870(37K), 02330(45K),
FR-A840-00930(37K) to 01800(55K)

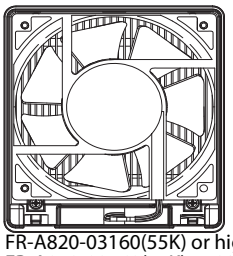

FR-A820-03160(55K) or higher,
FR-A840-02160(75K) to 03610(132K

I002455E

***Fig. 7-5:*** *Connection of the fan*

③ Reinstall the fan cover.

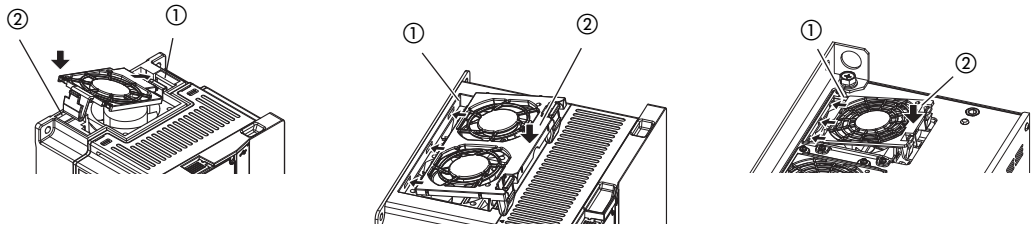


FR-A820-00105(1.5K) to 00250(3.7K)
FR-A840-00083(2.2K), 00126(3.7K)

FR-A820-00340(5.5K) to 01540(30K),
FR-A840-00170(5.5K) to 00770(30K)

FR-A820-01870(37K) or higher
FR-A840-00930(37K) to
03610(132K

① Insert hooks into holes.
② Insert hooks until you hear a click sound.

I002457E, I002458E, I002459E

***Fig. 7-6:*** *Reinstall the fan cover*

● Removal (FR-A840-04320(160K) or higher)

① Remove the fan cover fixing screws, and remove the fan cover.

② Disconnect the fan connector and remove the fan block.

③ Remove the fan fixing screws, and remove the fan.

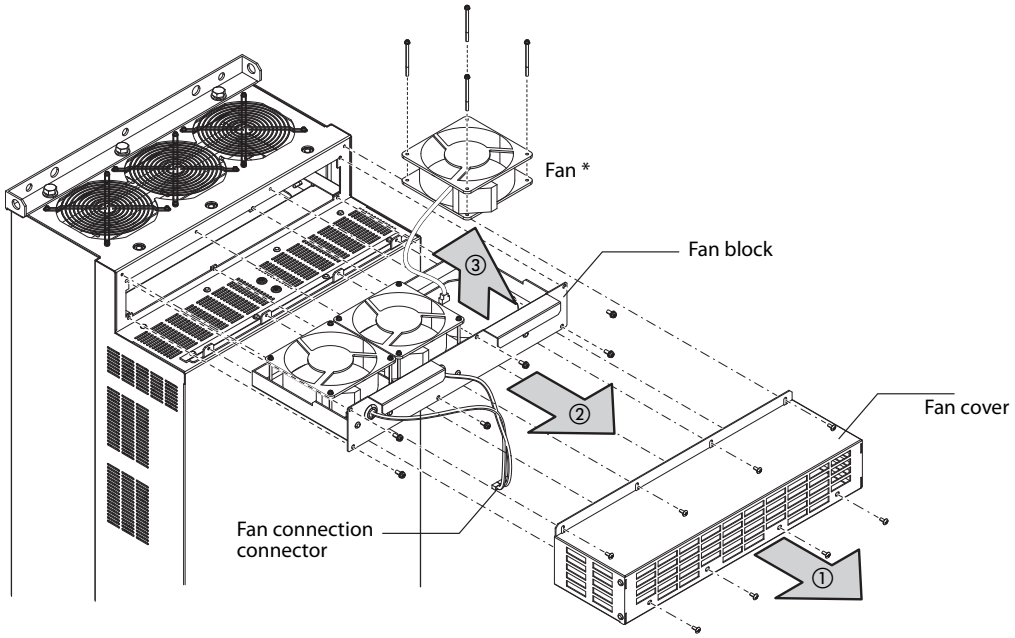


* The number of cooling fans differs according to the inverter capacity.

I002809E

***Fig. 7-7:*** *Removal of the fan (FR-A840-04320(160K) or higher)*

- Reinstallation (FR-A840-04320(160K) or higher)

① After confirming the orientation of the fan, reinstall the fan so that the arrow on the left of "AIR FLOW" faces up.

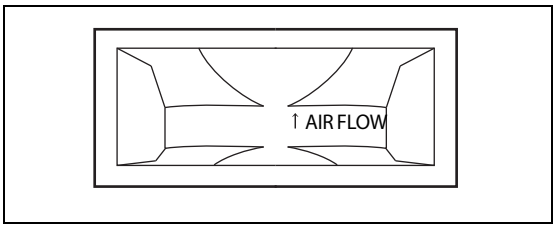


***Fig. 7-8:***
*Fan side face*

I002456E

② Install fans referring to the above figure.

**NOTES**

Installing the fan in the opposite direction of air flow can cause the inverter life to be shorter.

Prevent the cable from being caught when installing a fan.

Switch the power OFF before replacing fans. Since the inverter circuits are charged with voltage even after power OFF, replace fans only when the inverter cover is on the inverter to prevent an electric shock accident.

**Smoothing capacitors**

A large-capacity aluminum electrolytic capacitor is used for smoothing in the main circuit DC section, and an aluminum electrolytic capacitor is used for stabilizing the control power in the control circuit. Their characteristics are deteriorated by the adverse effects of ripple currents, etc. The replacement intervals greatly vary with the surrounding air temperature and operating conditions. When the inverter is operated in air-conditioned, normal environment conditions, replace the capacitors about every 10 years.

The appearance criteria for inspection are as follows:

- Case: Check the side and bottom faces for expansion.
- Sealing plate: Check for remarkable warp and extreme crack.
- Check for external crack, discoloration, liquid leakage, etc. Judge that the capacitor has reached its life when the measured capacitance of the capacitor reduced below 80% of the rating.

**NOTE**

The inverter diagnoses the main circuit capacitor and control circuit capacitor by itself and can judge their lives. (Refer to page 5-214.)

**Relays**

To prevent a contact fault, etc., relays must be replaced according to the cumulative number of switching times (switching life).

**Main circuit fuse inside the inverter (FR-A840-04320(160K) or higher)**

A fuse is used inside the inverter. Surrounding air temperature and operating condition affect the life of fuses. When the inverter is used in a normal air-conditioned environment, replace its fuse after about 10 years.

### 7.1.7 Inverter replacement

The inverter can be replaced with the control circuit wiring kept connected. Before replacement, remove the wiring cover of the inverter.

① Loosen the two mounting screws at the both side of the control circuit terminal block. (These screws cannot be removed.) Slide down the control circuit terminal block to remove it.

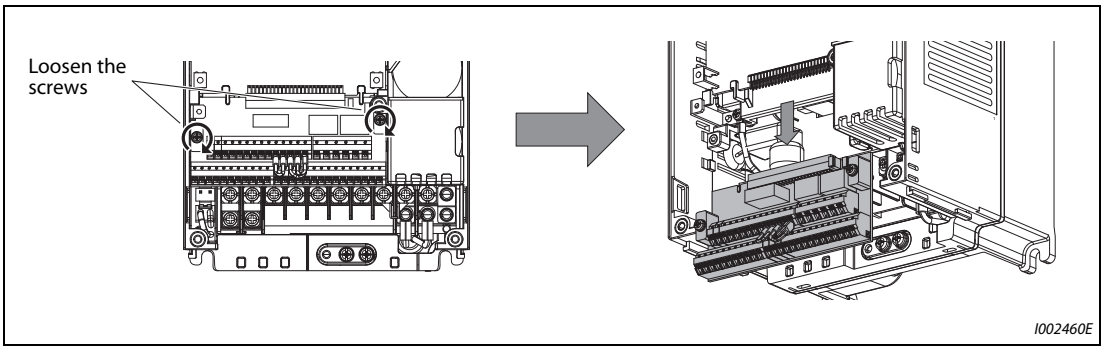


***Fig. 7-9:*** *Removal of the terminal block*

② Be careful not to bend the pins of the inverter's control circuit connector, reinstall the control circuit terminal block and fix it with the mounting screws.

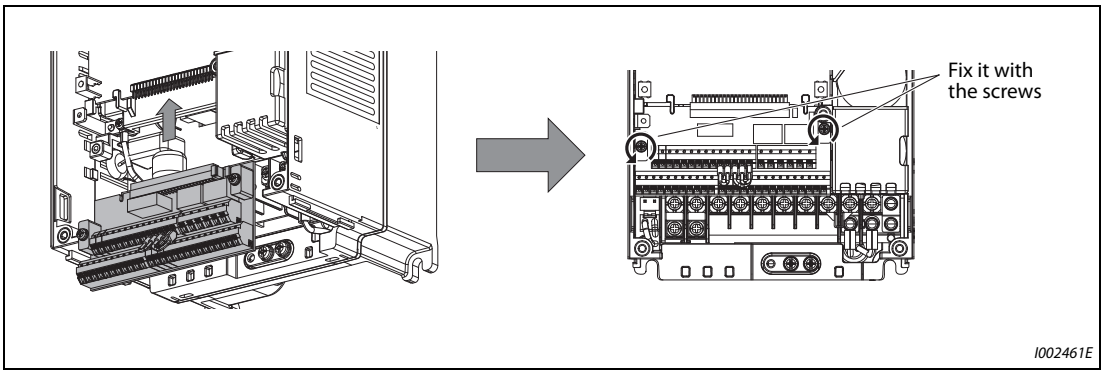


***Fig. 7-10:*** *Reinstallation of the terminal block*

**NOTE**

Before starting inverter replacement, switch power OFF, wait for at least 10 minutes, and then check the voltage with a tester and such to ensure safety.

# 7.2 Measurement of main circuit voltages, currents and powers

Since the voltages and currents on the inverter power supply and output sides include harmonics, measurement data depends on the instruments used and circuits measured.
When instruments for commercial frequency are used for measurement, measure the following circuits with the instruments given on the next page.

- When installing meters etc. on the inverter output side

  When the inverter-to-motor wiring length is large, especially in the 400 V class, small-capacity models, the meters and CTs may generate heat due to line-to-line leakage current. Therefore, choose the equipment which has enough allowance for the current rating.

  To measure and display the output voltage and output current of the inverter, it is recommended to use the terminal AM and FM/CA output functions of the inverter.

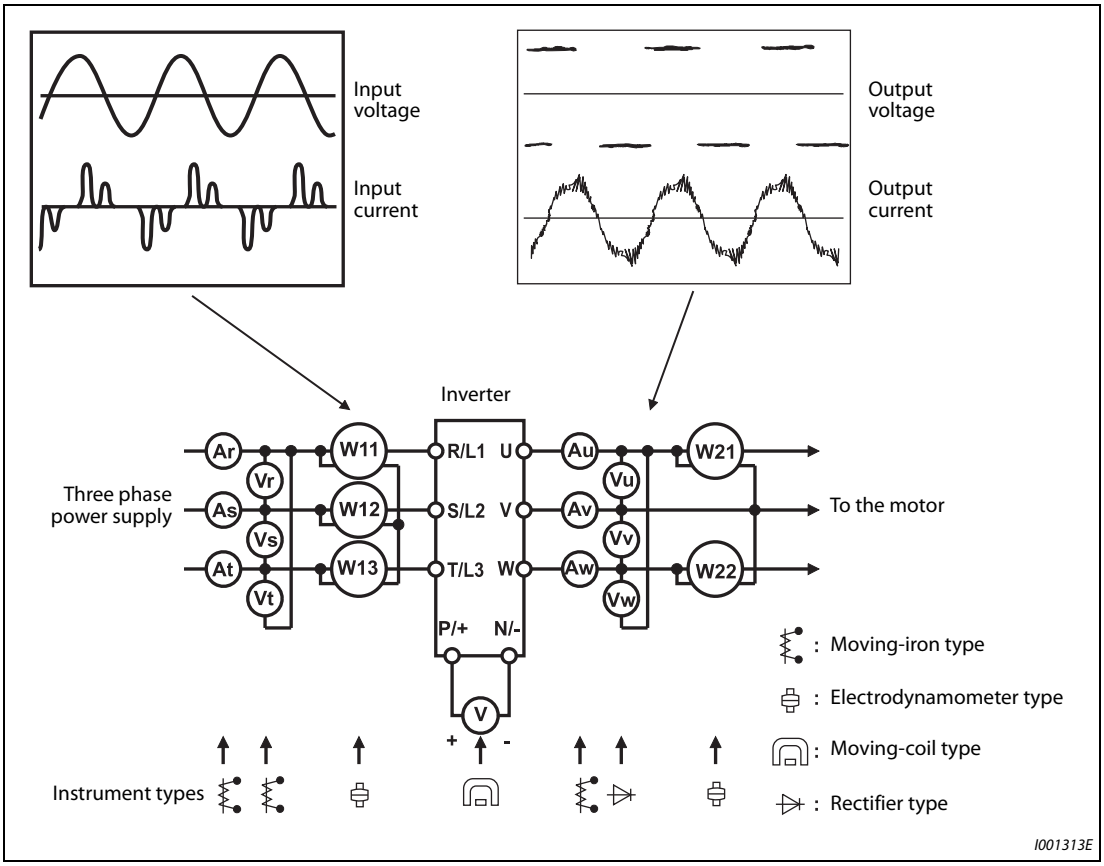


***Fig. 7-11:*** *Examples of measuring points and instruments*

### Measuring points and instruments

| Item | Measuring point | Measuring instrument | Remarks (reference measured value) | |
|---|---|---|---|---|
| Power supply voltage<br>V1 | Across R/L1 and S/L2,<br>S/L2 and T/L3,<br>T/L3 and R/L1 | Moving-iron type AC voltmeter<br>④ | Commercial power supply<br>Within permissible AC voltage fluctuation<br>(Refer to page 8-1.) | |
| Power supply side current<br>I1 | R/L1, S/L2, T/L3 line current | Moving-iron type AC ammeter<br>④ | | |
| Power supply side power<br>P1 | R/L1, S/L2, T/L3 and<br>Across R/L1 and S/L2,<br>S/L2 and T/L3,<br>T/L3 and R/L1 | Digital power meter (for inverter) or electrodynamic type single-phase wattmeter | P1 = W11 + W12 + W13 (3-wattmeter method) | |
| Power supply side power factor<br>Pf1 | Calculate after measuring power supply voltage, power supply side current and power supply side power.<br>$Pf_1 = \frac{P_1}{\sqrt{3}V_1 \times I_1} \times 100\ \%$ | | | |
| Output side voltage<br>V2 | Across U and V, V and W, and W and U | Rectifier type AC voltage meter<br>①④<br>(moving-iron type cannot measure.) | Difference between the phases is within 1% of the maximum output voltage. | |
| Output side current<br>I2 | U, V and W line currents | Moving-iron type AC ammeter<br>②④ | Difference between the phases is 10% or lower of the rated inverter current. | |
| Output side power<br>P2 | U, V, W and across U and V, V and W | Digital power meter (for inverter) or electrodynamic type single-phase wattmeter | P2 = W21 + W22<br>2-wattmeter method (or 3-wattmeter method) | |
| Output side power factor<br>Pf2 | Calculate in similar manner to power supply side power factor.<br>$Pf_2 = \frac{P_2}{\sqrt{3}V_2 \times I_2} \times 100\ \%$ | | | |
| Converter output | Across P/+ and N/– | Moving-coil type<br>(such as tester) | Inverter LED is lit. 1.35 × V1 | |
| Frequency setting signal | Across 2, 4(+) and 5 | Moving-coil type<br>(tester and such may be used.)<br>(internal resistance 50 kΩ or more) | 0 to 10 V DC, 4 to 20 mA | "5" is .common |
| | Across 1(+) and 5 | | 0 to ±5 V DC and 0 to ±10 V DC | |
| Frequency setting power supply | Across 10(+) and 5 | | 5.2 V DC | |
| | Across 10E(+) and 5 | | 10 V DC | |
| Frequency meter signal | Across AM(+) and 5 | | Approximately 10 V DC at maximum frequency<br>(without frequency meter) | |
| | Across CA(+) and 5 | | Approximately 20 mADC at maximum frequency | |
| | Across FM(+) and SD | | Approximately 5 V DC at maximum frequency<br>(without frequency meter)<br> 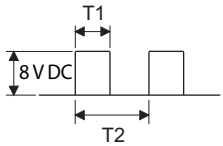 <br><br>Pulse width T1:<br>Adjust with C0 (Pr. 900).<br>Pulse cycle T2: Set with Pr. 55.<br>(frequency monitor only) | "SD" is common |
| Start signal<br>Select signal<br>Reset signal<br>Output stop signal | Across STF, STR, RH, RM, RL, JOG, RT, AU, STP (STOP), CS, RES, MRS(+) and SD (for sink logic) | | When open<br>20 to 30 V DC<br>ON voltage: 1 V or less | |

***Tab. 7-5:*** *Measuring Points and Instruments (1)*

| Item | Measuring point | Measuring instrument | Remarks (reference measured value) |
|---|---|---|---|
| Fault signal | Across A1 and C1<br>Across B1 and C1 | Moving-coil type<br>(such as tester) | Continuity check ③<br>[Normal] [Fault]<br>Across A1 and C1 Discontinuity Continuity<br>Across B1 and C1 Continuity Discontinuity |

***Tab. 7-5:*** *Measuring Points and Instruments (2)*

① Use an FFT to measure the output voltage accurately. A tester or general measuring instrument cannot measure accurately.

② When the carrier frequency exceeds 5 kHz, do not use this instrument since using it may increase eddy current losses produced in metal parts inside the instrument, leading to burnout. In this case, use an approximate-effective value type.

③ When the setting of Pr. 195 "ABC1 terminal function selection" is the positive logic

④ A digital power meter (designed for inverter) can also be used to measure.

## 7.2.1 Measurement of powers

Use digital power meters (for inverter) for the both of inverter input and output side. Alternatively, measure using electrodynamic type single-phase wattmeters for the both of inverter input and output side in two-wattmeter or three-wattmeter method. As the current is liable to be imbalanced especially in the input side, it is recommended to use the three-wattmeter method.

Examples of measured value differences produced by different measuring meters are shown below.

An error will be produced by difference between measuring instruments, e.g. power calculation type and two- or three-wattmeter type three-phase wattmeter. When a CT is used in the current measuring side or when the meter contains a PT on the voltage measurement side, an error will also be produced due to the frequency characteristics of the CT and PT.

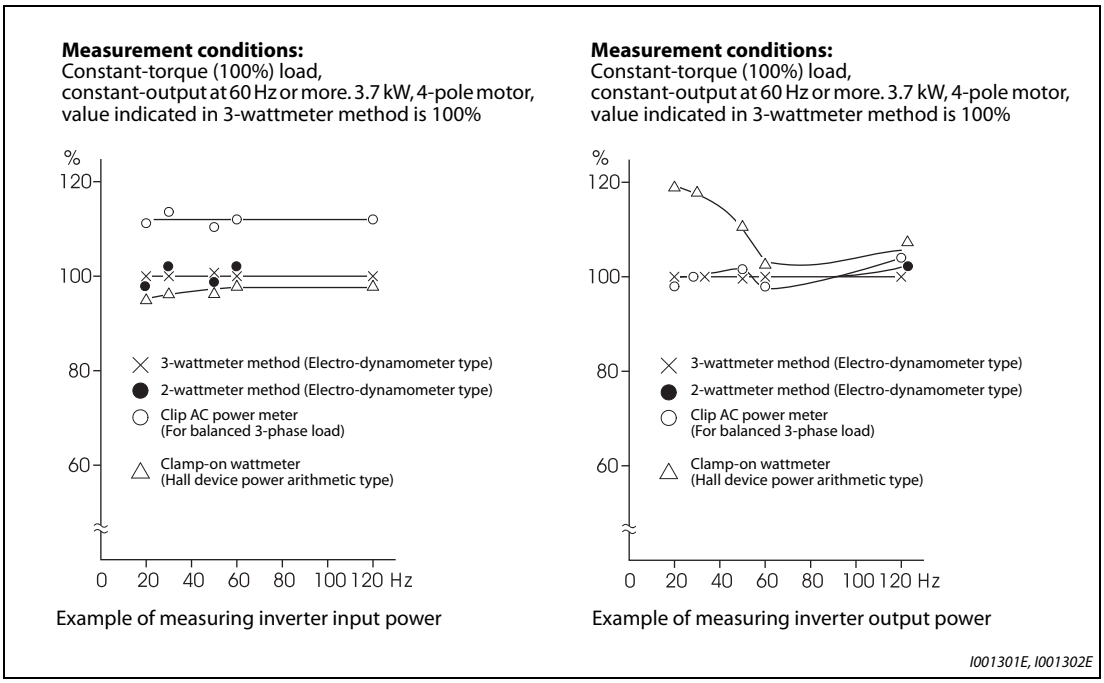


***Fig. 7-12:*** *Differences when measuring power with different instruments*

## 7.2.2 Measurement of voltages and use of PT

**Inverter input side**

As the input side voltage has a sine wave and it is extremely small in distortion, accurate measurement can be made with an ordinary AC meter.

**Inverter output side**

Since the output side voltage has a PWM-controlled rectangular wave, always use a rectifier type voltmeter.

A needle type tester cannot be used to measure the output side voltage as it indicates a value much greater than the actual value.

A moving-iron type meter indicates an effective value which includes harmonics and therefore the value is larger than that of the fundamental wave.

The value monitored on the operation panel is the inverter-controlled voltage itself. Hence, that value is accurate and it is recommended to monitor values (analog output) using the operation panel.

**PT**

No PT can be used in the output side of the inverter. Use a direct-reading meter. (A PT can be used in the input side of the inverter.)

## 7.2.3 Measurement of currents

Use moving-iron type meters on both the input and output sides of the inverter.

However, if the carrier frequency exceeds 5 kHz, do not use that meter since an overcurrent losses produced in the internal metal parts of the meter will increase and the meter may burn out. In this case, use an approximate-effective value type.

Since current on the inverter input side tends to be unbalanced, measurement of three phases is recommended. Correct value cannot be obtained by measuring only one or two phases. On the other hand, the unbalanced ratio of each phase of the output side current should be within 10%.

When a clamp ammeter is used, always use an effective value detection type. A mean value detection type produces a large error and may indicate an extremely smaller value than the actual value.

The value monitored on the operation panel is accurate if the output frequency varies, and it is recommended to monitor values (provide analog output) using the operation panel.

Examples of measured value differences produced by different measuring meters are shown below.

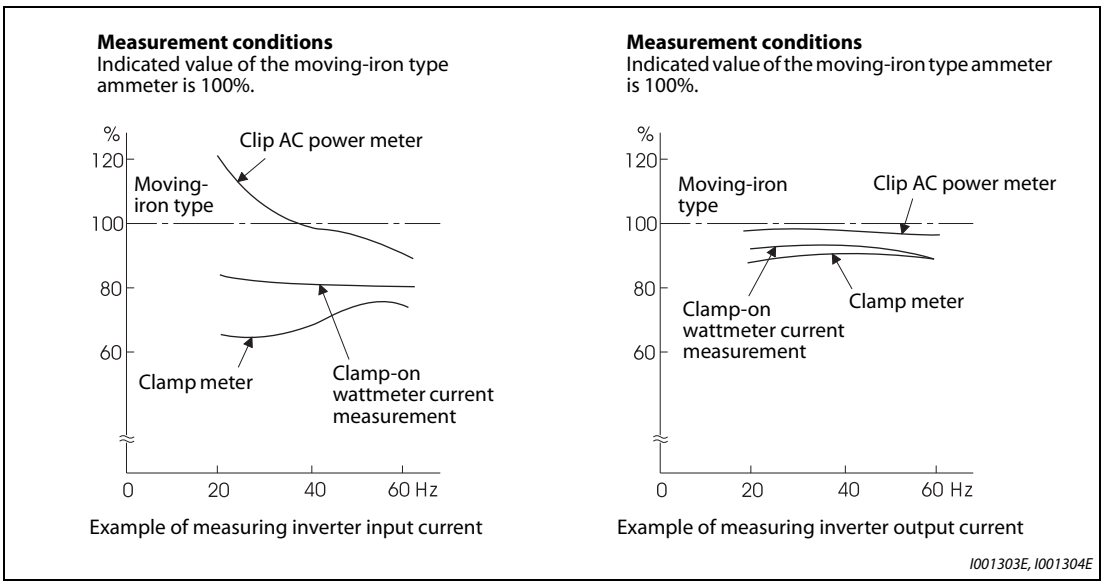


***Fig. 7-13:*** *Differences when measuring currents with different instruments*

### 7.2.4 Use of CT and transducer

A CT may be used in both the input and output sides of the inverter. Use the one with the largest possible VA ability because an error will increase if the frequency gets lower.

When using a transducer, use the effective value calculation type which is immune to harmonics.

### 7.2.5 Measurement of inverter input power factor

Calculate using effective power and apparent power. A power-factor meter cannot indicate an exact value.

$$\text{Total power factor of the inverter} = \frac{\text{Effective power}}{\text{Apparent power}} = \frac{\text{Three-phase input power found by the 3-wattmeter method}}{\sqrt{3} \times \text{V (power supply voltage)} \times \text{I (input current effective value)}}$$

### 7.2.6 Measurement of converter output voltage (across terminals P and N)

The output voltage of the converter is output across terminals P and N and can be measured with a moving-coil type meter (tester). Although the voltage varies according to the power supply voltage, approximately 270 V DC to 300 V DC (540 V DC to 600 V DC for the 400 V class) is output when no load is connected and voltage decreases during driving load operation.

When energy is regenerated from the motor during deceleration, for example, the converter output voltage rises to nearly 400 V DC to 450 V DC (800 V DC to 900 V DC for the 400 V class) maximum.

### 7.2.7 Measurement of inverter output frequency

In the initial setting of the FM-type inverter, a pulse train proportional to the output frequency is output across the pulse train output terminals FM and SD of the inverter. This pulse train output can be counted by a frequency counter, or a meter (moving-coil type voltmeter) can be used to read the mean value of the pulse train output voltage. When a meter is used to measure the output frequency, approximately 5 V DC is indicated at the maximum frequency.

For detailed specifications of the pulse train output terminal FM, refer to page 5-338.

In the initial setting of the CA-type inverter, a pulse train proportional to the output frequency is output across the analog current output terminals CA and 5 of the inverter. Measure the current using an ammeter or tester.

For detailed specifications of the analog current output terminal CA, refer to page 5-341.

## 7.2.8 Insulation resistance test using megger

For the inverter, conduct the insulation resistance test on the main circuit only as shown below and do not perform the test on the control circuit. (Use a 500 V DC megger.)

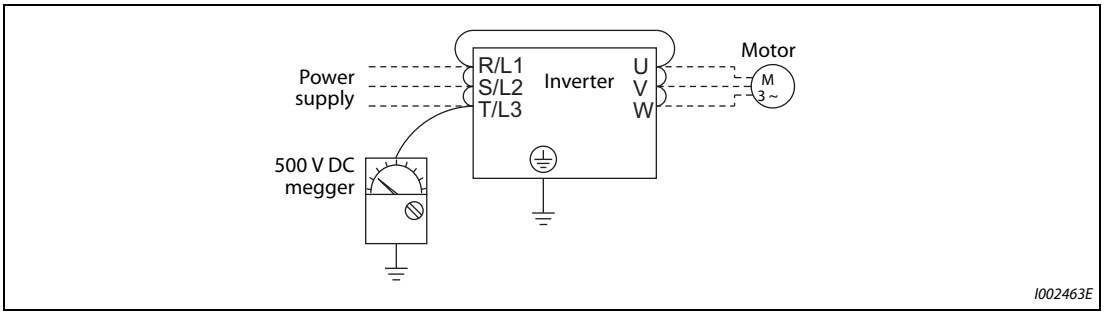


***Fig. 7-14:*** *Insulation resistance test*

**NOTES**

Before performing the insulation resistance test on the external circuit, disconnect the cables from all terminals of the inverter so that the test voltage is not applied to the inverter.

For the continuity test of the control circuit, use a tester (high resistance range) and do not use the megger or buzzer.

## 7.2.9 Pressure test

Do not conduct a pressure test. Deterioration may occur.

# 8 Specifications

## 8.1 Inverter rating

### 8.1.1 200 V class

| Model FR-A820-□ | | | 00046 (0.4K) | 00077 (0.75K) | 00105 (1.5K) | 00167 (2.2K) | 00250 (3.7K) | 00340 (5.5K) | 00490 (7.5K) | 00630 (11K) | 00770 (15K) | 00930 (18.5K) | 01250 (22K) | 01540 (30K) | 01870 (37K) | 02330 (45K) | 03160 (55K) | 03800 (75K) | 04750 (90K) |
|---|---|---|---|---|---|---|---|---|---|---|---|---|---|---|---|---|---|---|---|
| Applicable motor capacity [kW] ① | | SLD | 0.75 | 1.5 | 2.2 | 3.7 | 5.5 | 7.5 | 11 | 15 | 18.5 | 22 | 30 | 37 | 45 | 55 | 75 | 110 | 132 |
| | | LD | 0.75 | 1.5 | 2.2 | 3.7 | 5.5 | 7.5 | 11 | 15 | 18.5 | 22 | 30 | 37 | 45 | 55 | 75 | 90 | 110 |
| | | ND (initial setting) | 0.4 | 0.75 | 1.5 | 2.2 | 3.7 | 5.5 | 7.5 | 11 | 15 | 18.5 | 22 | 30 | 37 | 45 | 55 | 75 | 90 |
| | | HD | 0.2 ② | 0.4 | 0.75 | 1.5 | 2.2 | 3.7 | 5.5 | 7.5 | 11 | 15 | 18.5 | 22 | 30 | 37 | 45 | 55 | 75 |
| Output | Rated capacity [kVA] ③ | SLD | 1.8 | 2.9 | 4 | 6.4 | 10 | 13 | 19 | 24 | 29 | 35 | 48 | 59 | 71 | 89 | 120 | 145 | 181 |
| | | LD | 1.6 | 2.7 | 3.7 | 5.8 | 8.8 | 12 | 17 | 22 | 27 | 32 | 43 | 53 | 65 | 81 | 110 | 132 | 165 |
| | | ND (initial setting) | 1.1 | 1.9 | 3 | 4.2 | 6.7 | 9.1 | 13 | 18 | 23 | 29 | 34 | 44 | 55 | 67 | 82 | 110 | 132 |
| | | HD | 0.6 | 1.1 | 1.9 | 3 | 4.2 | 6.7 | 9.1 | 13 | 18 | 23 | 29 | 34 | 44 | 55 | 67 | 82 | 110 |
| | Rated current [A] | SLD | 4.6 | 7.7 | 10.5 | 16.7 | 25 | 34 | 49 | 63 | 77 | 93 | 125 | 154 | 187 | 233 | 316 | 380 | 475 |
| | | LD | 4.2 | 7 | 9.6 | 15.2 | 23 | 31 | 45 | 58 | 70.5 | 85 | 114 | 140 | 170 | 212 | 288 | 346 | 432 |
| | | ND (initial setting) | 3 | 5 | 8 | 11 | 17.5 | 24 | 33 | 46 | 61 | 76 | 90 | 115 | 145 | 175 | 215 | 288 | 346 |
| | | HD | 1.5 | 3 | 5 | 8 | 11 | 17.5 | 24 | 33 | 46 | 61 | 76 | 90 | 115 | 145 | 175 | 215 | 288 |
| | Overload current rating ④ | SLD | 110% 60 s, 120% 3 s (inverse-time characteristics) at surrounding air temperature 40 °C | | | | | | | | | | | | | | | | |
| | | LD | 120% 60 s, 150% 3 s (inverse-time characteristics) at surrounding air temperature 50 °C | | | | | | | | | | | | | | | | |
| | | ND (initial setting) | 150% 60 s, 200% 3 s (inverse-time characteristics) at surrounding air temperature 50 °C | | | | | | | | | | | | | | | | |
| | | HD | 200% 60 s, 250% 3 s (inverse-time characteristics) at surrounding air temperature 50 °C | | | | | | | | | | | | | | | | |
| | Rated voltage ⑤ | | Three-phase 200 to 240 V | | | | | | | | | | | | | | | | |
| | Regenerative braking | Brake transistor | Built-in | | | | | | | | | | | FR-BU2 (Option) | | | | | |
| | | Maximum brake torque ⑦ | 150% torque/ 3%ED ⑥ | | | 100% torque/ 3%ED ⑥ | | 100% torque/ 2%ED ⑥ | 20% torque/continuous | | | | | | | | | 10% torque/ continuous | |
| | | FR-ABR (when the option is used) | 150% torque/ 10%ED | | 100% torque/ 10%ED | | | | | 100% torque/ 6%ED | | | | — | — | — | — | — | — |
| Power supply | Rated input AC voltage/frequency | | Three-phase 200 to 240 V 50 Hz/60 Hz | | | | | | | | | | | | | | | | |
| | Permissible AC voltage fluctuation | | 170 to 264 V 50 Hz/60 Hz | | | | | | | | | | | | | | | | |
| | Permissible frequency fluctuation | | ±5% | | | | | | | | | | | | | | | | |
| | Rated input current [A] ⑧ | SLD | 5.3 | 8.9 | 13.2 | 19.7 | 31.3 | 45.1 | 62.8 | 80.6 | 96.7 | 115 | 151 | 185 | 221 | 269 | 316 | 380 | 475 |
| | | LD | 5 | 8.3 | 12.2 | 18.3 | 28.5 | 41.6 | 58.2 | 74.8 | 90.9 | 106 | 139 | 178 | 207 | 255 | 288 | 346 | 432 |
| | | ND (initial setting) | 3.9 | 6.3 | 10.6 | 14.1 | 22.6 | 33.4 | 44.2 | 60.9 | 80 | 96.3 | 113 | 150 | 181 | 216 | 266 | 288 | 346 |
| | | HD | 2.3 | 3.9 | 6.3 | 10.6 | 14.1 | 22.6 | 33.4 | 44.2 | 60.9 | 80 | 96.3 | 113 | 150 | 181 | 216 | 215 | 288 |
| | Power supply capacity [kVA] ⑨ | SLD | 2 | 3.4 | 5 | 7.5 | 12 | 17 | 24 | 31 | 37 | 44 | 58 | 70 | 84 | 103 | 120 | 145 | 181 |
| | | LD | 1.9 | 3.2 | 4.7 | 7 | 11 | 16 | 22 | 29 | 35 | 41 | 53 | 68 | 79 | 97 | 110 | 132 | 165 |
| | | ND (initial setting) | 1.5 | 2.4 | 4 | 5.4 | 8.6 | 13 | 17 | 23 | 30 | 37 | 43 | 57 | 69 | 82 | 101 | 110 | 132 |
| | | HD | 0.9 | 1.5 | 2.4 | 4 | 5.4 | 8.6 | 13 | 17 | 23 | 30 | 37 | 43 | 57 | 69 | 82 | 82 | 110 |
| Protective structure (IEC 60529) ⑩ | | | Enclose type (IP20) | | | | | | | | | | | Open type (IP00) | | | | | |
| Cooling system | | | Self-cooling | | Forced air cooling | | | | | | | | | | | | | | |
| Approx. mass [kg] | | | 2.0 | 2.2 | 3.3 | 3.3 | 3.3 | 6.7 | 6.7 | 8.3 | 15 | 15 | 15 | 22 | 42 | 42 | 54 | 74 | 74 |

***Tab. 8-1:*** *Specifications FR-A820*

For footnotes ① to ⑩ refer to page 8-4.

## 8.1.2 400 V class

| Model FR-A840-□ | | | 00023 (0.4K) | 00038 (0.75K) | 00052 (1.5K) | 00083 (2.2K) | 00126 (3.7K) | 00170 (5.5K) | 00250 (7.5K) | 00310 (11K) | 00380 (15K) | 00470 (18.5K) | 00620 (22K) | 00770 (30K) | 00930 (37K) | 01160 (45K) | 01800 (55K) | 02160 (75K) | 02600 (90K) |
|---|---|---|---|---|---|---|---|---|---|---|---|---|---|---|---|---|---|---|---|
| Applicable motor capacity [kW] ① | | SLD | 0.75 | 1.5 | 2.2 | 3.7 | 5.5 | 7.5 | 11 | 15 | 18.5 | 22 | 30 | 37 | 45 | 55 | 75/90 | 110 | 132 |
| | | LD | 0.75 | 1.5 | 2.2 | 3.7 | 5.5 | 7.5 | 11 | 15 | 18.5 | 22 | 30 | 37 | 45 | 55 | 75 | 90 | 110 |
| | | ND (initial setting) | 0.4 | 0.75 | 1.5 | 2.2 | 3.7 | 5.5 | 7.5 | 11 | 15 | 18.5 | 22 | 30 | 37 | 45 | 55 | 75 | 90 |
| | | HD | 0.2 ② | 0.4 | 0.75 | 1.5 | 2.2 | 3.7 | 5.5 | 7.5 | 11 | 15 | 18.5 | 22 | 30 | 37 | 45 | 55 | 75 |
| Output | Rated capacity [kVA] ③ | SLD | 1.8 | 2.9 | 4 | 6.3 | 10 | 13 | 19 | 24 | 29 | 36 | 47 | 59 | 71 | 88 | 137 | 165 | 198 |
| | | LD | 1.6 | 2.7 | 3.7 | 5.8 | 8.8 | 12 | 18 | 22 | 27 | 33 | 43 | 53 | 65 | 81 | 110 | 137 | 165 |
| | | ND (initial setting) | 1.1 | 1.9 | 3 | 4.6 | 6.9 | 9.1 | 13 | 18 | 24 | 29 | 34 | 43 | 54 | 66 | 84 | 110 | 137 |
| | | HD | 0.6 | 1.1 | 1.9 | 3 | 4.6 | 6.9 | 9.1 | 13 | 18 | 24 | 29 | 34 | 43 | 54 | 66 | 84 | 110 |
| | Rated current [A] | SLD | 2.3 | 3.8 | 5.2 | 8.3 | 12.6 | 17 | 25 | 31 | 38 | 47 | 62 | 77 | 93 | 116 | 180 | 216 | 260 |
| | | LD | 2.1 | 3.5 | 4.8 | 7.6 | 11.5 | 16 | 23 | 29 | 35 | 43 | 57 | 70 | 85 | 106 | 144 | 180 | 216 |
| | | ND (initial setting) | 1.5 | 2.5 | 4 | 6 | 9 | 12 | 17 | 23 | 31 | 38 | 44 | 57 | 71 | 86 | 110 | 144 | 180 |
| | | HD | 0.8 | 1.5 | 2.5 | 4 | 6 | 9 | 12 | 17 | 23 | 31 | 38 | 44 | 57 | 71 | 86 | 110 | 144 |
| | Overload current rating ④ | SLD | 110% 60 s, 120% 3 s (inverse-time characteristics) at surrounding air temperature 40 °C | | | | | | | | | | | | | | | | |
| | | LD | 120% 60 s, 150% 3 s (inverse-time characteristics) at surrounding air temperature 50 °C | | | | | | | | | | | | | | | | |
| | | ND (initial setting) | 150% 60 s, 200% 3 s (inverse-time characteristics) at surrounding air temperature 50 °C | | | | | | | | | | | | | | | | |
| | | HD | 200% 60 s, 250% 3 s (inverse-time characteristics) at surrounding air temperature 50 °C | | | | | | | | | | | | | | | | |
| | Rated voltage ⑤ | | Three-phase 380 to 500 V | | | | | | | | | | | | | | | | |
| | Regenerative braking | Brake transistor | Built-in | | | | | | | | | | | | | | | FR-BU2(Option) | |
| | | Maximum brake torque ⑦ | 100% torque/2%ED ⑥ | | | | | | | 20% torque/continuous | | | | | | | | 10% torque/ continuous | |
| | | FR-ABR (when the option is used) | 100% torque/10%ED | | | | | | | 100% torque/6%ED | | | | — ⑫ | | | | — | — |
| Power supply | Rated input AC voltage/frequency | | Three-phase 380 to 500 V 50 Hz/60 Hz ⑪ | | | | | | | | | | | | | | | | |
| | Permissible AC voltage fluctuation | | 323 to 550 V 50 Hz/60 Hz | | | | | | | | | | | | | | | | |
| | Permissible frequency fluctuation | | ±5% | | | | | | | | | | | | | | | | |
| | Rated input current [A] ⑧ | SLD | 3.2 | 5.4 | 7.8 | 10.9 | 16.4 | 22.5 | 31.7 | 40.3 | 48.2 | 58.4 | 76.8 | 97.6 | 115 | 141 | 180 | 216 | 260 |
| | | LD | 3 | 4.9 | 7.3 | 10.1 | 15.1 | 22.3 | 31 | 38.2 | 44.9 | 53.9 | 75.1 | 89.7 | 106 | 130 | 144 | 180 | 216 |
| | | ND (initial setting) | 2.3 | 3.7 | 6.2 | 8.3 | 12.3 | 17.4 | 22.5 | 31 | 40.3 | 48.2 | 56.5 | 75.1 | 91 | 108 | 134 | 144 | 180 |
| | | HD | 1.4 | 2.3 | 3.7 | 6.2 | 8.3 | 12.3 | 17.4 | 22.5 | 31 | 40.3 | 48.2 | 56.5 | 75.1 | 91 | 108 | 110 | 144 |
| | Power supply capacity [kVA] ⑨ | SLD | 2.5 | 4.1 | 5.9 | 8.3 | 12 | 17 | 24 | 31 | 37 | 44 | 59 | 74 | 88 | 107 | 137 | 165 | 198 |
| | | LD | 2.3 | 3.7 | 5.5 | 7.7 | 12 | 17 | 24 | 29 | 34 | 41 | 57 | 68 | 81 | 99 | 110 | 137 | 165 |
| | | ND (initial setting) | 1.7 | 2.8 | 4.7 | 6.3 | 9.4 | 13 | 17 | 24 | 31 | 37 | 43 | 57 | 69 | 83 | 102 | 110 | 137 |
| | | HD | 1.1 | 1.7 | 2.8 | 4.7 | 6.3 | 9.4 | 13 | 17 | 24 | 31 | 37 | 43 | 57 | 69 | 83 | 84 | 110 |
| Protective structure (IEC 60529) ⑩ | | | Enclose type (IP20) | | | | | | | | | | | Open type (IP00) | | | | | |
| Cooling system | | | Self-cooling | | | Forced air cooling | | | | | | | | | | | | | |
| Approx. mass [kg] | | | 2.8 | 2.8 | 2.8 | 3.3 | 3.3 | 6.7 | 6.7 | 8.3 | 8.3 | 15 | 15 | 23 | 41 | 41 | 43 | 52 | 55 |

***Tab. 8-2:*** *Specifications FR-A840-00023(0.4K) to 02600(90K)*

For footnotes ① to ⑫ refer to page 8-4.

| Model FR-A840-□ | | | | 03250 (110K) | 03610 (132K) | 04320 (160K) | 04810 (185K) | 05470 (220K) | 06100 (250K) | 06830 (280K) |
|---|---|---|---|---|---|---|---|---|---|---|
| Applicable motor capacity [kW] ① | | | SLD | 160 | 185 | 220 | 250 | 280 | 315 | 355 |
| | | | LD | 132 | 160 | 185 | 220 | 250 | 280 | 315 |
| | | | ND (initial setting) | 110 | 132 | 160 | 185 | 220 | 250 | 280 |
| | | | HD | 90 | 110 | 132 | 160 | 185 | 220 | 250 |
| Output | Rated capacity [kVA] ③ | | SLD | 248 | 275 | 329 | 367 | 417 | 465 | 521 |
| | | | LD | 198 | 248 | 275 | 329 | 367 | 417 | 465 |
| | | | ND (initial setting) | 165 | 198 | 248 | 275 | 329 | 367 | 417 |
| | | | HD | 137 | 165 | 198 | 248 | 275 | 329 | 367 |
| | Rated current [A] | | SLD | 325 | 361 | 432 | 481 | 547 | 610 | 683 |
| | | | LD | 260 | 325 | 361 | 432 | 481 | 547 | 610 |
| | | | ND (initial setting) | 216 | 260 | 325 | 361 | 432 | 481 | 547 |
| | | | HD | 180 | 216 | 260 | 325 | 361 | 432 | 481 |
| | Overload current rating ④ | | SLD | 110% 60 s, 120% 3 s (inverse-time characteristics) at surrounding air temperature 40 °C | | | | | | |
| | | | LD | 120% 60 s, 150% 3 s (inverse-time characteristics) at surrounding air temperature 50 °C | | | | | | |
| | | | ND (initial setting) | 150% 60 s, 200% 3 s (inverse-time characteristics) at surrounding air temperature 50 °C | | | | | | |
| | | | HD | 200% 60 s, 250% 3 s (inverse-time characteristics) at surrounding air temperature 50 °C | | | | | | |
| | Rated voltage ⑤ | | | Three-phase 380 to 500 V | | | | | | |
| | Regenerative braking | Brake transistor | | FR-BU2(Option) | | | | | | |
| | | Maximum brake torque ⑦ | | 10% torque/continuous | | | | | | |
| | | | FR-ABR (when the option is used) | — | — | — | — | — | — | — |
| Power supply | Rated input AC voltage/frequency | | | Three-phase 380 to 500 V 50 Hz/60 Hz ⑪ | | | | | | |
| | Permissible AC voltage fluctuation | | | 323 to 550 V 50 Hz/60 Hz | | | | | | |
| | Permissible frequency fluctuation | | | ±5% | | | | | | |
| | Rated input current [A] ⑧ | | SLD | 325 | 361 | 432 | 481 | 547 | 610 | 683 |
| | | | LD | 260 | 325 | 361 | 432 | 481 | 547 | 610 |
| | | | ND (initial setting) | 216 | 260 | 325 | 361 | 432 | 481 | 547 |
| | | | HD | 180 | 216 | 260 | 325 | 361 | 432 | 481 |
| | Power supply capacity [kVA] ⑨ | | SLD | 248 | 275 | 329 | 367 | 417 | 465 | 521 |
| | | | LD | 198 | 248 | 275 | 329 | 367 | 417 | 465 |
| | | | ND (initial setting) | 165 | 198 | 248 | 275 | 329 | 367 | 417 |
| | | | HD | 137 | 165 | 198 | 248 | 275 | 329 | 367 |
| Protective structure (IEC 60529) ⑩ | | | | Open type (IP00) | | | | | | |
| Cooling system | | | | Forced air cooling | | | | | | |
| Approx. mass [kg] | | | | 71 | 78 | 117 | 117 | 166 | 166 | 166 |

***Tab. 8-3:*** *Specifications FR-A840-03250(110K) to 06830(280K)*

For footnotes ① to ⑪ refer to page 8-4.

① The applicable motor capacity indicated is the maximum capacity applicable for use of the Mitsubishi 4-pole standard motor.

② The 0.2 kW motor capacity is applicable under V/F control only.

③ The rated output capacity indicated assumes that the output voltage is 220 V for 200 V class and 440 V for 400 V class.

④ The % value of the overload current rating indicated is the ratio of the overload current to the inverter's rated output current. For repeated duty, allow time for the inverter and motor to return to or below the temperatures under 100% load.

⑤ The maximum output voltage does not exceed the power supply voltage. The maximum output voltage can be changed within the setting range. However, the maximum point of the voltage waveform at the inverter output side is the power supply voltage multiplied by about $\sqrt{2}$.

⑥ Value by the built-in brake resistor

⑦ Value for the ND rating

⑧ The rated input current indicates a value at a rated output voltage. The impedance at the power supply side (including those of the input reactor and cables) affects the rated input current.

⑨ The power supply capacity is the value when at the rated output current. It varies by the impedance at the power supply side (including those of the input reactor and cables).

⑩ FR-DU08: IP40 (except for the PU connector section)

⑪ For the power voltage exceeding 480 V, set Pr. 977 "Input voltage mode selection".)

⑫ The braking capability of the inverter built-in brake can be improved with a commercial brake resistor. For the details, please contact your sales representative.

# 8.2 Motor rating

## 8.2.1 Vector control dedicated motor SF-V5RU (1500r/min series)

### 200 V class

| Motor type SF-V5RU□K | | 1 | 2 | 3 | 5 | 7 | 11 | 15 | 18 | 22 | 30 | 37 | 45 | 55 |
|---|---|---|---|---|---|---|---|---|---|---|---|---|---|---|
| Applicable inverter model FR-A820-□K (ND rating) | | 2.2 | 3.7 | 5.5 | 7.5 | 11 | 15 | 18.5 | 22 | 30 | 37 | 45 | 55 | 75 |
| Rated output [kW] | | 1.5 | 2.2 | 3.7 | 5.5 | 7.5 | 11 | 15 | 18.5 | 22 | 30 ① | 37 ① | 45 ① | 55 |
| Rated current [A] | | 8.5 | 11.5 | 17.6 | 28.5 | 37.5 | 54 | 72.8 | 88 | 102 | 126 | 168 | 198 | 264 |
| Rated torque [Nm] | | 9.55 | 14.1 | 23.6 | 35.0 | 47.7 | 70.0 | 95.5 | 118 | 140 | 191 | 235 | 286 | 350 |
| Maximum torque 150% 60s [Nm] | | 14.3 | 21.1 | 35.4 | 52.4 | 71.6 | 105 | 143 | 176 | 211 | 287 | 353 | 429 | 525 |
| Rated speed [r/min] | | 1500 | | | | | | | | | | | | |
| Maximum speed [r/min] | | 3000 ② | | | | | | | | | | | | 2400 |
| Frame No. | | 90L | 100L | 112M | 132S | 132M | 160M | 160L | 180M | 180M | 200L | 200L | 200L | 225S |
| Inertia moment J [$\times 10^{-4}$kg$\times$ m$^2$] | | 67.5 | 105 | 175 | 275 | 400 | 750 | 875 | 1725 | 1875 | 3250 | 3625 | 3625 | 6850 |
| Noise ⑤ | | ≤ 75 dB | | | | | | | | | ≤ 80 dB | | | ≤ 85 dB |
| Cooling fan (with thermal protector) ⑦⑧ | Voltage | Single-phase 200 V/50 Hz<br>Single-phase 200 V to 230 V/60 Hz | | | | | Three-phase 200 V/50 Hz<br>Three-phase 200 to 230 V/60 Hz | | | | | | | |
| | Input ③ | 36/55 W<br>(0.26/0.32 A) | | | 22/28 W<br>(0.11/0.13 A) | | 55/71 W<br>(0.39/0.39 A) | | | | 100/156 W<br>(0.47/0.53 A) | | | 85/130W<br>(0.46/0.52A) |
| | Recommended thermal setting | 0.36 A | | | 0.18 A | | 0.51 A | | | | 0.69 A | | | 0.68 A |
| Surrounding air temperature, humidity | | -10 to +40 °C (non-freezing), 90%RH or less (non-condensing) | | | | | | | | | | | | |
| Structure (Protective structure) | | Totally enclosed forced draft system (Motor: IP44, cooling fan: IP23S) ④ | | | | | | | | | | | | |
| Detector | | Encoder 2048P/R, A phase, B phase, Z phase +12 V DC power supply ⑥ | | | | | | | | | | | | |
| Equipment | | Encoder, thermal protector, fan | | | | | | | | | | | | |
| Heat resistance class | | F | | | | | | | | | | | | |
| Vibration rank | | V10 | | | | | | | | | | | | |
| Approx. mass [kg] | | 24 | 33 | 41 | 52 | 62 | 99 | 113 | 138 | 160 | 238 | 255 | 255 | 320 |

***Tab. 8-4:*** *Motor rating SF-V5RU (200 V)*

For footnotes ① to ⑧ refer to page 8-6.

### 400 V class

| Motor type SF-V5RUH□K | | 1 | 2 | 3 | 5 | 7 | 11 | 15 | 18 | 22 | 30 | 37 | 45 | 55 |
|---|---|---|---|---|---|---|---|---|---|---|---|---|---|---|
| Applicable inverter model FR-A840-□K (ND rating) | | 2.2 | 2.2 | 3.7 | 7.5 | 11 | 15 | 18.5 | 22 | 30 | 37 | 45 | 55 | 75 |
| Rated output [kW] | | 1.5 | 2.2 | 3.7 | 5.5 | 7.5 | 11 | 15 | 18.5 | 22 | 30 ① | 37 ① | 45 ① | 55 |
| Rated current [A] | | 4.2 | 5.8 | 8.8 | 14.5 | 18.5 | 27.5 | 35.5 | 44 | 51 | 67 | 84 | 99 | 132 |
| Rated torque [Nm] | | 9.55 | 14.1 | 23.6 | 35.0 | 47.7 | 70.0 | 95.5 | 118 | 140 | 191 | 235 | 286 | 350 |
| Maximum torque 150% 60s [Nm] | | 14.3 | 21.1 | 35.4 | 52.4 | 71.6 | 105 | 143 | 176 | 211 | 287 | 353 | 429 | 525 |
| Rated speed [r/min] | | 1500 | | | | | | | | | | | | |
| Maximum speed [r/min] | | 3000 ② | | | | | | | | | | | | 2400 |
| Frame No. | | 90L | 100L | 112M | 132S | 132M | 160M | 160L | 180M | 180M | 200L | 200L | 200L | 225S |
| Inertia moment J [$\times 10^{-4}$kg$\times$ m$^2$] | | 67.5 | 105 | 175 | 275 | 400 | 750 | 875 | 1725 | 1875 | 3250 | 3625 | 3625 | 6850 |
| Noise ⑤ | | ≤ 75 dB | | | | | | | | | ≤ 80 dB | | | ≤ 85 dB |
| Cooling fan (with thermal protector) ⑦⑧ | Voltage | Single-phase 200 V/50 Hz<br>Single-phase 200 V to 230 V/60 Hz | | | | | Three-phase 380 to 400 V/50 Hz<br>Three-phase 400 to 460 V/60 Hz | | | | | | | |
| | Input ③ | 36/55 W<br>(0.26/0.32 A) | | | 22/28 W<br>(0.11/0.13 A) | | 55/71 W<br>(0.19/0.19 A) | | | | 100/156 W<br>(0.27/0.30 A) | | | 85/130 W<br>(0.23/0.26 A) |
| | Recommended thermal setting | 0.36 A | | | 0.18 A | | 0.25 A | | | | 0.39 A | | | 0.34 A |
| Surrounding air temperature, humidity | | -10 to +40 °C (non-freezing), 90% RH or less (non-condensing) | | | | | | | | | | | | |
| Structure (Protective structure) | | Totally enclosed forced draft system (Motor: IP44, cooling fan: IP23S) ④ | | | | | | | | | | | | |
| Detector | | Encoder 2048P/R, A phase, B phase, Z phase +12 V DC power supply ⑥ | | | | | | | | | | | | |
| Equipment | | Encoder, thermal protector, fan | | | | | | | | | | | | |
| Heat resistance class | | F | | | | | | | | | | | | |
| Vibration rank | | V10 | | | | | | | | | | | | |
| Approx. mass [kg] | | 24 | 33 | 41 | 52 | 62 | 99 | 113 | 138 | 160 | 238 | 255 | 255 | 320 |

***Tab. 8-5:*** *Motor rating SF-V5RU (400 V)*

① 80% output in the high-speed range. (The output is reduced when the speed is 2400 r/min or more. Contact us separately for details.)

② A dedicated motor of 3.7 kW or less can be run at the maximum speed of 3600 r/min. Consult our sales office when using the motor at the maximum speed.

③ Power (current) at 50 Hz/60 Hz.

④ Since a motor with brake has a window for gap check, the protective structure of both the cooling fan section and brake section is IP20. S of IP23S is an additional code indicating the condition that protection from water intrusion is established only when a cooling fan is not operating.

⑤ The value when high carrier frequency is set (Pr. 72 = 6, Pr. 240 = 0).

⑥ The 12V power supply is required as the power supply for the encoder.

⑦ The cooling fan is equipped with a thermal protector. The cooling fan stops when the coil temperature exceeds the specified value in order to protect the fan motor. A restrained cooling fan or degraded fan motor insulation could be causes for the rise in coil temperature.The cooling fan re-starts when the coil temperature drops to normal.

⑧ The cooling fan voltage and input values are the basic specifications of the cooling fan alone and free air values. The input value becomes slightly larger when it is rotated by this motor due to an increased workload, but the cooling fan can be used as it is.When preparing a thermal relay at the user side, use the recommended thermal setting.

## 8.2.2 Vector control dedicated motor SF-THY

| Motor type | | | SF-THY | | | | | | | |
|---|---|---|---|---|---|---|---|---|---|---|
| Applicable inverter (ND rating) | | | FR-A820-□K | FR-A840-□K | | | | | | |
| | | | 90 | 90 | 110 | 132 | 160 | 185 | 220 | 280 |
| Rated output [kW] | | | 75 | 75 | 90 | 110 | 132 | 160 | 200 | 250 |
| Rated torque [Nm] | | | 477 | 477 | 572 | 700 | 840 | 1018 | 1273 | 1591 |
| Maximum torque 150%60s [Nm] | | | 715 | 715 | 858 | 1050 | 1260 | 1527 | 1909 | 2386 |
| Rated speed [r/min] | | | 1500 | 1500 | | | | | | |
| Maximum speed [r/min] | | | 2400 | 2400 | 1800 | | | | | |
| Frame No. | | | 250MD | 250MD | 250MD | 280MD | 280MD | 280MD | 280L | 315H |
| Inertia moment J [kg× $m^2$] | | | 1.1 | 1.1 | 1.7 | 2.3 | 2.3 | 4.0 | 3.8 | 5.0 |
| Noise | | | 90 dB | 90 dB | | | 95 dB | | | |
| Cooling fan | Voltage | | Three-phase, 200 V/50 Hz, 200 V/60 Hz, 220 V/60 Hz (400 V class cooling fan is available upon order) | | | | | | | |
| | Input [W] | 50 Hz | 750 | 400 | 400 | 400 | 400 | 400 | 750 | 750 |
| | | 60 Hz | | 750 | 750 | 750 | 750 | 750 | 1500 | 1500 |
| Approx. mass [kg] | | | 610 | 610 | 660 | 870 | 890 | 920 | 1170 | 1630 |
| Common specifications | Surrounding air temperature, humidity | | –10 to +40 °C (non-freezing), 90%RH or less (non-condensing) | | | | | | | |
| | Structure | | Totally enclosed forced draft system | | | | | | | |
| | Detector | | Encoder 2048P/R, A phase, B phase, Z phase +12 V DC power supply ① | | | | | | | |
| | Equipment | | Encoder, thermal protector ②, fan | | | | | | | |
| | Insulation | | Class F | | | | | | | |
| | Vibration rank | | V10 | | | | | | | |
| | Dedicated encoder | Resolution | 2048 pulse/rev | | | | | | | |
| | | Power supply voltage | 12 V DC±10% | | | | | | | |
| | | Current consumption | 90 mA | | | | | | | |
| | | Output signal form | A, B phases (90° phase shift) Z phase: 1 pulse/rev | | | | | | | |
| | | Output circuit | Complementary (constant voltage output matched by emitter follow) | | | | | | | |
| | | Output voltage | "H" level: Power supply voltage 9 V or more ($I_{OH}$: -20 mA)<br>"L" level: Power supply voltage 3 V or less ($I_{OL}$: 20 mA) | | | | | | | |

***Tab. 8-6:*** *Motor rating SF-THY*

① The 12 V power supply or the control terminal option (FR-A7PS) is required as the power supply for the encoder.

② A motor with a thermal protector is also available. Contact your sales representative.

### IPM motor MM-CF (2000r/min series)

| Motor type MM-CF□ | | 52(C)(B) | 102(C)(B) | 152(C)(B) | 202(C)(B) | 352(C)(B) | 502(C) | 702(C) |
|---|---|---|---|---|---|---|---|---|
| Applicable inverter FR-A820□K | SLD | 0.4 | 0.4 | 0.75 | 1.5 | 2.2 | 3.7 | 5.5 |
| | LD | 0.4 | 0.4 | 0.75 | 1.5 | 2.2 | 3.7 | 5.5 |
| | ND (initial setting) | 0.4 | 0.75 | 1.5 | 2.2 | 3.7 | 5.5 | 7.5 |
| | HD | 0.75 ⑥ | 1.5 ⑥ | 2.2 ⑥ | 3.7 ⑥ | 5.5 ⑥ | 7.5 ⑥ | 11 ⑥ |
| Continuous characteristics ① | Rated output [kW] | 0.5 | 1.0 | 1.5 | 2.0 | 3.5 | 5.0 | 7.0 |
| | Rated torque [Nm] | 2.39 | 4.78 | 7.16 | 9.55 | 16.70 | 23.86 | 33.41 |
| Rated speed ①[r/min] | | 2000 | | | | | | |
| Max. speed [r/min] | | 3000 | | | | | | |
| Instantaneous permissible speed [r/min] | | 3450 | | | | | | |
| Maximum torque [Nm] | | 4.78 | 9.56 | 14.32 | 19.09 | 33.41 | 47.73 | 66.82 |
| Inertia moment J ⑤ [$\times 10^{-4}$ kg × $m^2$] | | 6.6 (7.0) | 13.7 (14.9) | 20.0 (21.2) | 45.5 (48.9) | 85.6 (89.0) | 120.0 | 160.0 |
| Recommended ratio of load inertia moment to motor shaft inertia moment ② | | 100 times max. | | | 50 times max. | | | |
| Rated current [A] | | 1.81 | 3.70 | 5.22 | 7.70 | 12.5 | 20.5 | 27.0 |
| Insulation rank | | Class F | | | | | | |
| Structure | | Totally-enclosed, self-cooling (protective system: IP44 ③, IP65 ③④) | | | | | | |
| Surrounding air temperature, humidity | | -10 °C to +40 °C (non-freezing), 90% RH or less (non-condensing) | | | | | | |
| Storage temperature and humidity | | -20 °C to +70 °C (non-freezing), 90% RH or less (non-condensing) | | | | | | |
| Ambience | | Indoors (no direct sunlight), free from corrosive gas, flammable gas, oil mist, dust and dirt | | | | | | |
| Altitude | | Max. 1000 m above sea level | | | | | | |
| Vibration | | X: 9.8 $m/s^2$, Y: 24.5 $m/s^2$ | | | | | | |
| Mass [kg] ⑤ | | 5.1 (7.8) | 7.2 (11) | 9.3 (13) | 13 (20) | 19 (28) | 27 | 36 |

***Tab. 8-7:*** *Motor rating MM-CF*

① When the power supply voltage drops, we cannot guarantee the above output and rated speed.

② When the load torque is 20% of the motor rating. The permissible load inertia moment ratio is smaller when the load torque is larger.
Consult us if the load inertia moment ratio exceeds the above value.

③ This does not apply to the shaft through portion.

④ Value for MM-CF□2C.

⑤ The value for MM-CF□2B is indicated in parentheses.

⑥ Applicable one-rank higher inverters for the lifted low-speed range torque operation. PM sensor-less vector control specification

## 8.2.3 Torque characteristics

- Under high frequency superposition control

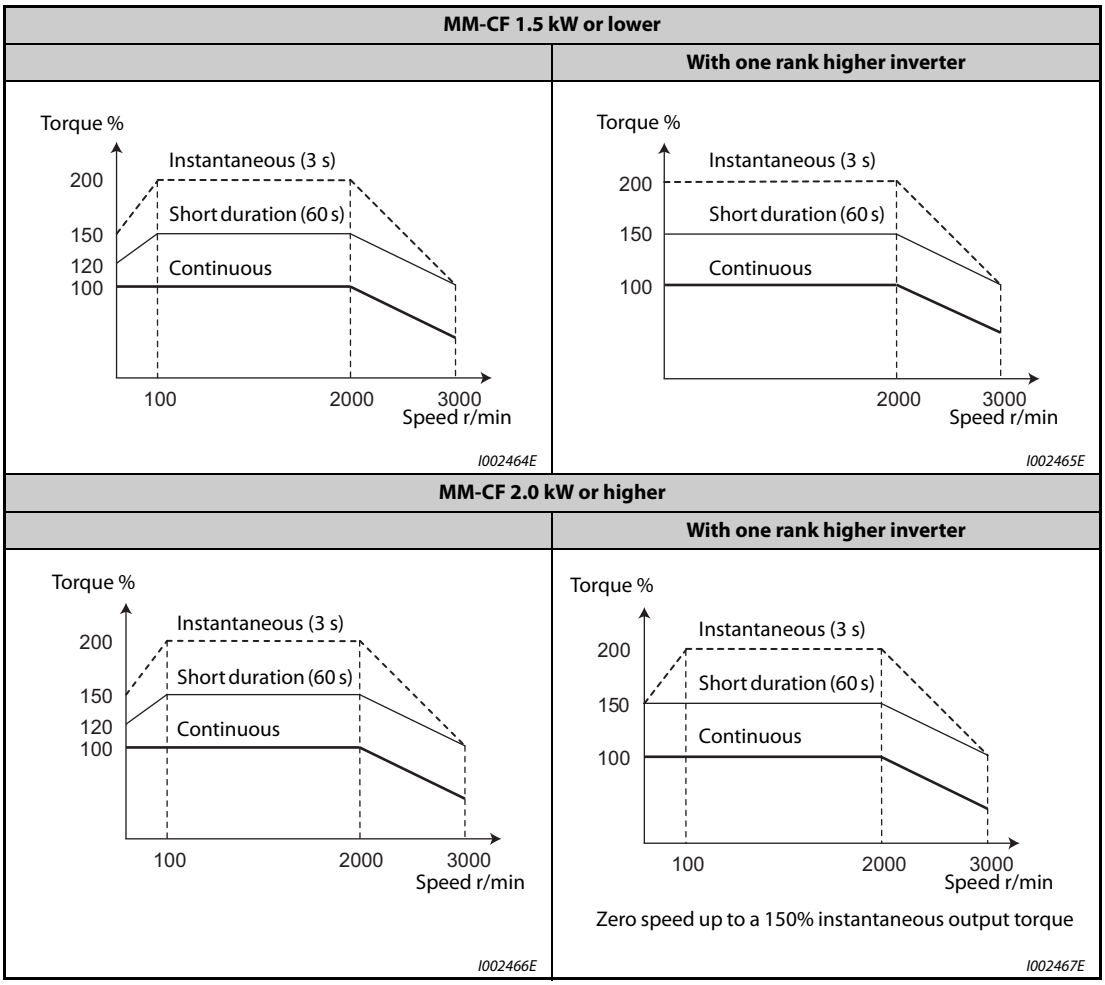


***Tab. 8-8:*** *Torque characteristics under high frequency superposition control*

- During current synchronization operation

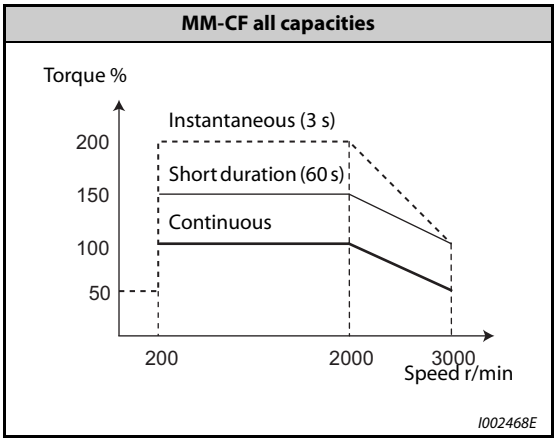


***Tab. 8-9:*** *Torque characteristics during current synchronization operation*

# 8.3 Common specifications

| | | | |
|---|---|---|---|
| Control specifications | **Control method** | | Soft-PWM control, high carrier frequency PWM control (selectable among V/F control, Advanced magnetic flux vector control, Real sensorless vector control), vector control ①, and PM sensorless vector control |
| | **Output frequency range** | | 0.2 to 590 Hz (Up to 400 Hz under Advanced magnetic flux vector control, Real sensorless vector control, vector control ①, and PM sensorless vector control.) |
| | **Frequency setting resolution** | **Analog input** | 0.015 Hz/60 Hz (0 to 10 V/12 bits for terminals 2 and 4)<br>0.03 Hz/60 Hz (0 to 5 V/11 bits or 0 to 20 mA/<br>approx. 11 bits for terminals 2 and 4, 0 to ±10 V/12 bits for terminal 1)<br>0.06 Hz/60 Hz (0 to ±5 V/11 bits for terminal 1) |
| | | **Digital input** | 0.01 Hz |
| | **Frequency accuracy** | **Analog input** | Within ±0.2% of the max. output frequency (25 °C ± 10 °C) |
| | | **Digital input** | Within 0.01% of the set output frequency |
| | **Voltage/frequency characteristics** | | Base frequency can be set from 0 to 590 Hz.<br>Constant-torque/variable-torque pattern or adjustable 5 points V/F can be selected. |
| | **Starting torque ⑤** | | SLD rating: 120% 0.3 Hz, LD rating: 150% 0.3 Hz, ND rating: 200% ⑥ 0.3 Hz, HD rating: 250% 0.3 Hz<br>(under Real sensorless vector control, vector control ①) |
| | **Torque boost** | | Manual torque boost |
| | **Acceleration/deceleration time setting** | | 0 to 3600 s (acceleration and deceleration can be set individually), linear or S-pattern acceleration/deceleration mode, backlash countermeasures acceleration/deceleration can be selected. |
| | **DC injection brake (induction motor)** | | Operation frequency (0 to 120 Hz), operation time (0 to 10 s), operation voltage (0 to 30%) variable |
| | **Stall prevention operation level** | | Activation range of stall prevention operation (SLD rating: 0 to 120%, LD rating: 0 to 150%, ND rating: 0 to 220%, HD rating: 0 to 280%). Whether to use the stall prevention or not can be selected |
| | **Torque limit level** | | Torque limit value can be set (0 to 400% variable). |
| Operation specifications | **Frequency setting signal** | **Analog input** | Terminals 2 and 4: 0 to 5 V, 0 to 10 V, 4 to 20 mA (0 to 20 mA) are available.<br>Terminal 1: -5 to +5 V, -10 to +10 V are available. |
| | | **Digital input** | Input using the setting dial of the operation panel or parameter unit<br>Four-digit BCD or 16-bit binary (when used with option FR-A8AX) |
| | **Start signal** | | Forward and reverse rotation or start signal automatic self-holding input (3-wire input) can be selected. |
| | **Input signals (twelve terminals)** | | Low-speed operation command, Middle-speed operation command, High-speed operation command, Second function selection, Terminal 4 input selection, Jog operation selection, Electronic bypass function, Output stop, Start self-holding selection, Forward rotation command, Reverse rotation command, Inverter reset |
| | | **Pulse train input** | 100 kpps |
| | **Operational functions** | | Maximum and minimum frequency settings, multi-speed operation, acceleration/deceleration pattern, thermal protection, DC injection brake, starting frequency, JOG operation, output stop (MRS), stall prevention, regeneration avoidance, increased magnetic excitation deceleration, DC feeding ⑧, frequency jump, rotation display, automatic restart after instantaneous power failure, electronic bypass sequence, remote setting, automatic acceleration/deceleration, intelligent mode, retry function, carrier frequency selection, fast-response current limit, forward/reverse rotation prevention, operation mode selection, slip compensation, droop control, load torque high-speed frequency control, speed smoothing control, traverse, auto tuning, applied motor selection, gain tuning, machine analyzer ①, RS-485 communication, PID control, PID pre-charge function, easy dancer control, cooling fan operation selection, stop selection (deceleration stop/coasting), power-failure deceleration stop function ⑧, stop-on-contact control, PLC function, life diagnosis, maintenance timer, current average monitor, multiple rating, orientation control ①, speed control, torque control, position control, pre-excitation, torque limit, test run, 24 V power supply input for control circuit, safety stop function, swingi ng suppression control |
| | **Output signal<br>Open collector output (five terminals)<br>Relay output (two terminals)** | | Inverter running, Up to frequency, Instantaneous power failure/undervoltage ⑧, Overload warning, Output frequency detection, Fault<br>Fault codes of the inverter can be output (4 bits) from the open collector. |
| | | **Pulse train output** | 50 kpps |

***Tab. 8-10:*** *Common specifications (1)*

| | | | |
|---|---|---|---|
| Indication | For meter | Pulse train output (FM type) | Max. 2.4 kHz: one terminal (output frequency)<br>The monitored item can be changed using Pr. 54 "FM/CA terminal function selection". |
| | | Current output (CA type) | Max. 20 mA DC: one terminal (output current)<br>The monitored item can be changed using Pr. 54 "FM/CA terminal function selection". |
| | | Voltage output | Max. 10 V DC: one terminal (output voltage)<br>The monitored item can be changed using Pr. 158 "AM terminal function selection". |
| | Operation panel (FR-DU08) | Operating status | Output frequency, Output current, Output voltage, Frequency setting value<br>The monitored item can be changed using Pr. 52 "Operation panel main monitor selection". |
| | | Fault record | Fault record is displayed when a fault occurs. Past 8 fault records and the conditions immediately before the fault (output voltage/current/frequency/cumulative energization time/year/month/date/time) are stored. |
| Protective/ warning function | | Protective function | Overcurrent trip during acceleration, Overcurrent trip during constant speed, Overcurrent trip during deceleration or stop, Regenerative overvoltage trip during acceleration, Regenerative overvoltage trip during constant speed, Regenerative overvoltage trip during deceleration or stop, Inverter overload trip, Motor overload trip, Heatsink overheat, Instantaneous power failure ⑧, Undervoltage ⑧, Input phase loss ④⑧, Stall prevention stop, Loss of synchronism detection ④, Brake transistor alarm detection, Output side earth (ground) fault overcurrent, Output phase loss, External thermal relay operation ④, PTC thermistor operation ④, Option fault, Communication option fault, Parameter storage device fault, PU disconnection, Retry count excess ④, Parameter storage device fault, CPU fault, Operation power supply short circuit/ RS-485 terminal power supply short circuit, 24 V DC power fault, Abnormal output current detection, ④, Inrush current limit circuit fault ⑧, Communication fault (inverter), Analog input fault, USB communication fault, Safety circuit fault, Overspeed occurrence ④, Speed deviation excess detection ① ④, Signal loss detection ① ④, Excessive position fault ① ④, Brake sequence fault ④, Encoder phase fault ① ④, 4 mA input fault ④, Pre-charge fault ④, PID signal fault ④, Option fault, Opposite rotation deceleration fault ④, Internal circuit fault, abnormal internal temperature ⑦ |
| | | Warning function | Fan alarm, Stall prevention (overcurrent), Stall prevention (overvoltage), Regenerative brake pre-alarm ④⑨, Electronic thermal relay function pre-alarm, PU stop, Speed limit indication ④, Parameter copy, Safety stop, Maintenance signal output ④, USB host error, Home position return setting error ④, Home position return uncompleted ④, Home position return parameter setting error ④, Operation panel lock ④, Password locked ④, Parameter write error, Copy operation error, 24 V external power supply operation, Internal fan alarm ⑦ |
| Environment | Surrounding air temperature | | -10 °C to +50 °C (non-freezing) (LD, ND, HD ratings)<br>-10 °C to +40 °C (non-freezing) (SLD rating, IP55 compatible models) |
| | Surrounding air humidity | | With circuit board coating, IP55 compatible models: 95% RH or less (non-condensing),<br>Without circuit board coating: 90% RH or less (non-condensing) |
| | Storage temperature ② | | -20 °C to +65 °C |
| | Atmosphere | | Indoors (without corrosive gas, flammable gas, oil mist, dust and dirt, etc.) |
| | Altitude/vibration | | Maximum 1000 m above sea level ③, 5.9 m/s$^2$ or less (2.9 m/s$^2$ for the FR-A840-04320(160K) or higher) at 10 to 55 Hz (directions of X, Y, Z axes) |

***Tab. 8-10:*** *Common specifications (2)*

① Available only when the option (FR-A8AP) is mounted.

② Temperature applicable for a short time, e.g. in transit.

③ For the installation at an altitude above 1,000 m up to 2,500 m, derate the rated current 3% per 500 m.

④ This protective function is not available in the initial status.

⑤ For PM sensorless vector control, refer to page A-4.

⑥ In the initial setting for the FR-A820-00340(5.5K) or higher and the FR-A840-00170(5.5.K) or higher, the starting torque is limited to 150% by the torque in level.

⑦ Available only for the IP55 compatible model.

⑧ Available only for the standard model and the IP55 compatible model.

⑨ Available only for the standard model.

# 8.4 Outline dimension drawings

## 8.4.1 Inverter outline dimension drawings

**FR-A820-00046(0.4K), FR-A820-00077(0.75K)**

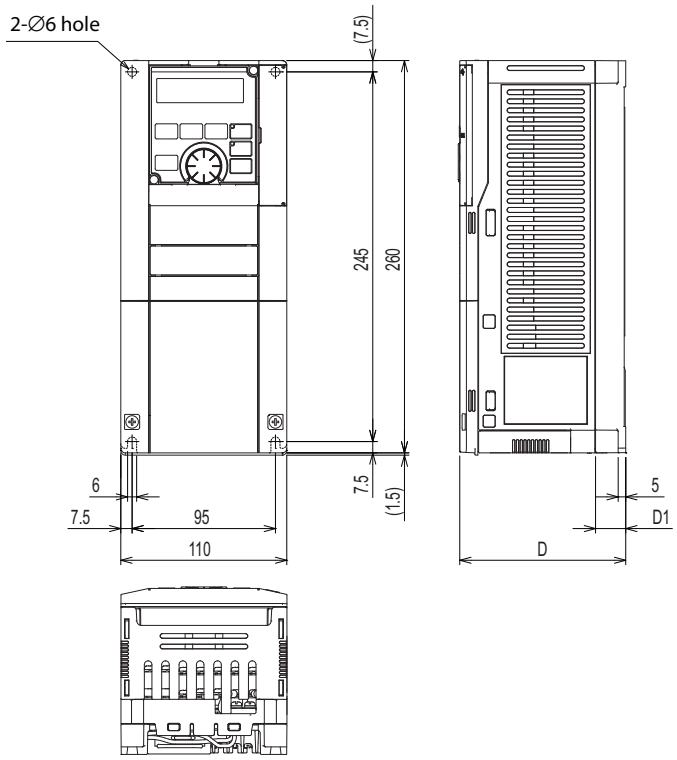


| Inverter model | D | D1 |
|---|---|---|
| FR-A820-00046(0.4K) | 110 | 20 |
| FR-A820-00077(0.75K) | 125 | 35 |

(Unit: mm)

I002469E

***Fig. 8-1:*** *Dimensions FR-A820-00046(0.4K), FR-A820-00077(0.75K)*

**FR-A820-00105(1.5K), 00167(2.2K), 00250(3.7K)**
**FR-A840-00023(0.4K), 00038(0.75K), 00052(1.5K), 00083(2.2K), 00126(3.7K)**

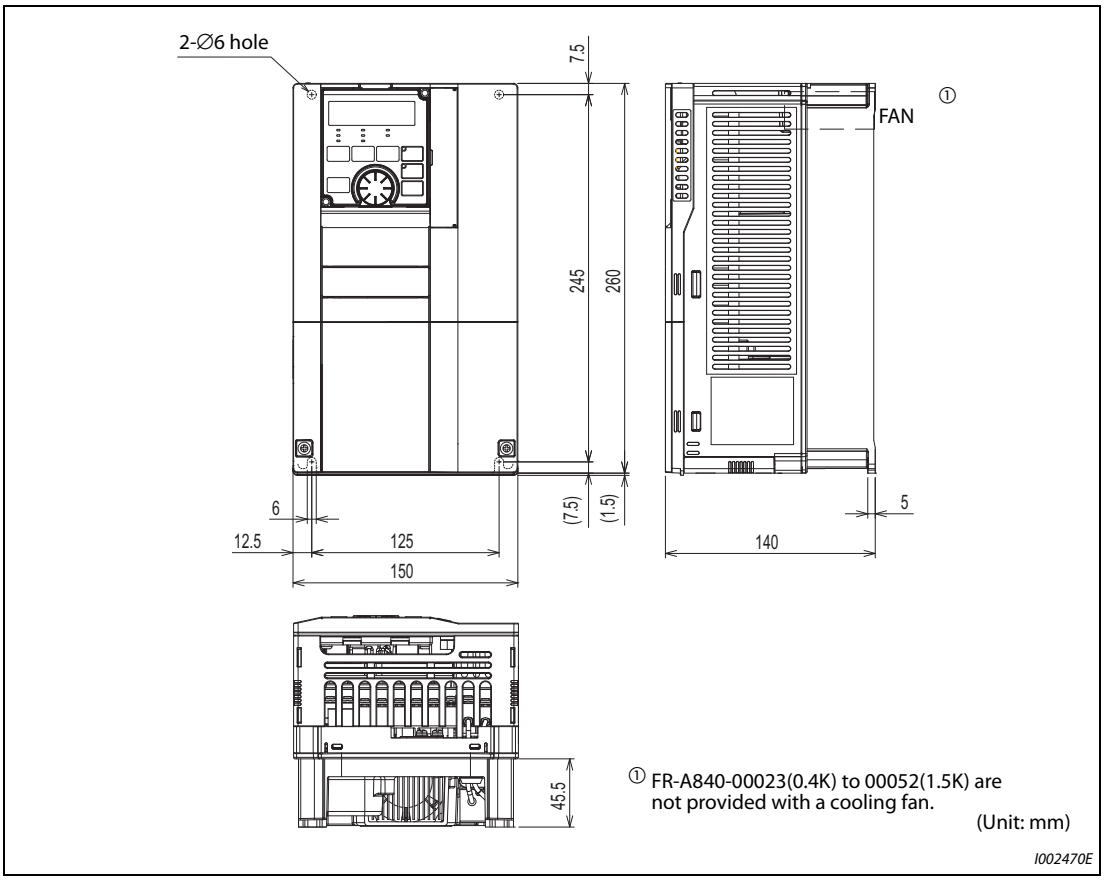


***Fig. 8-2:*** *Dimensions FR-A820-00105(1.5K), 00167(2.2K), 00250(3.7K), FR-A840-00023(0.4K), 00038(0.75K), 00052(1.5K), 00083(2.2K), 00126(3.7K)*

**FR-A820-00340(5.5K), 00490(7.5K), 00630(11K)**
**FR-A840-00170(5.5K), 00250(7.5K), 00310(11K), 00380(15K)**

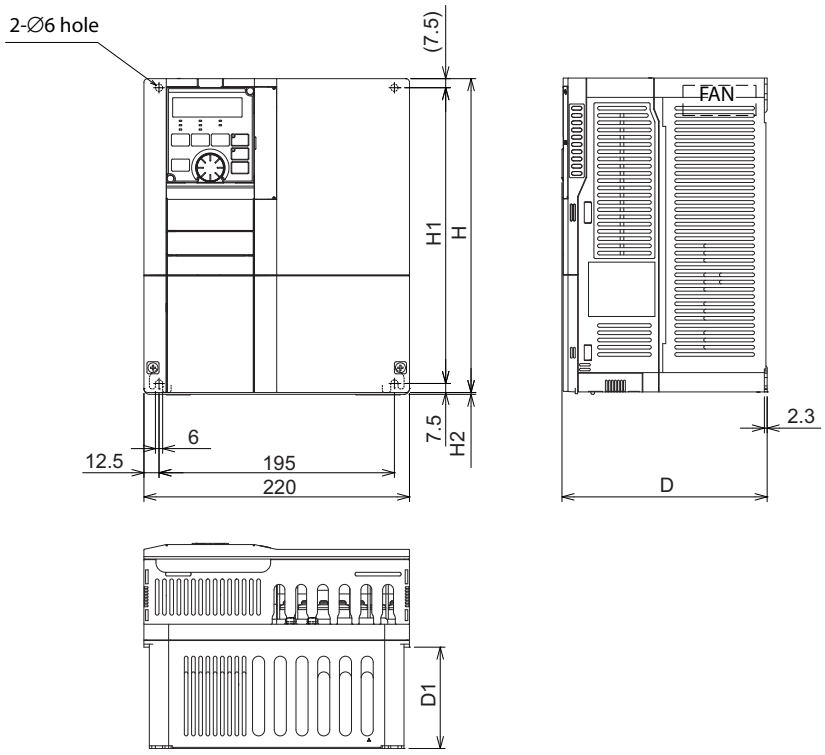


| Inverter model | H | H1 | H2 | D | D1 |
|---|---|---|---|---|---|
| FR-A820-00340(5.5K), 00490(7.5K)<br>FR-A840-00170(5.5K), 00250(7.5K) | 260 | 245 | 1.5 | 170 | 84 |
| FR-A820-00630(11K)<br>FR-A840-00310(11K), 00380(15K) | 300 | 285 | 3 | 190 | 101.5 |

(Unit: mm)

I002471E_B

***Fig. 8-3:*** *Dimensions FR-A820-00340(5.5K), 00490(7.5K), 00630(11K), FR-A840-00170(5.5K), 00250(7.5K), 00310(11K), 00380(15K)*

**FR-A820-00770(15K), 00930(18.5K), 01250(22K)**
**FR-A840-00470(18.5K), 00620(22K)**

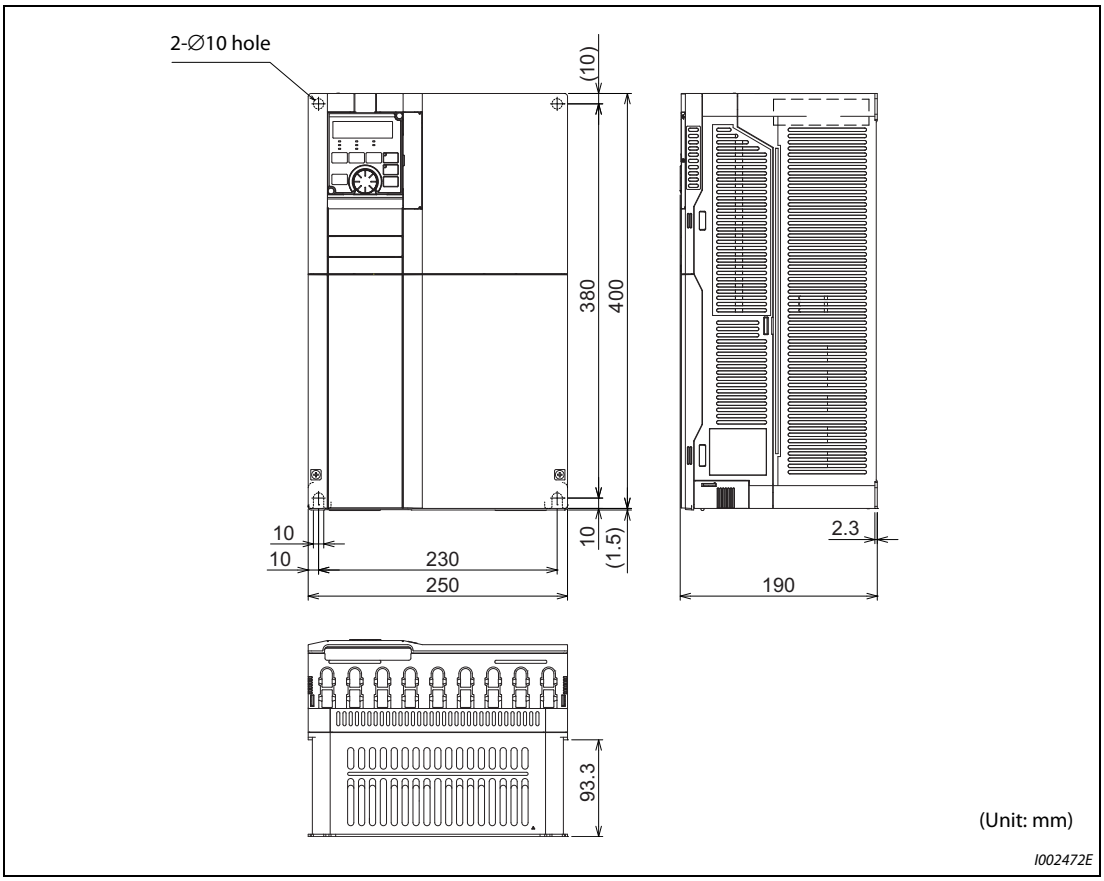


***Fig. 8-4:*** *Dimensions FR-A820-00770(15K), 00930(18.5K), 01250(22K), FR-A840-00470(18.5K), 00620(22K)*

**FR-A820-01540(30K), FR-A840-00770(30K)**

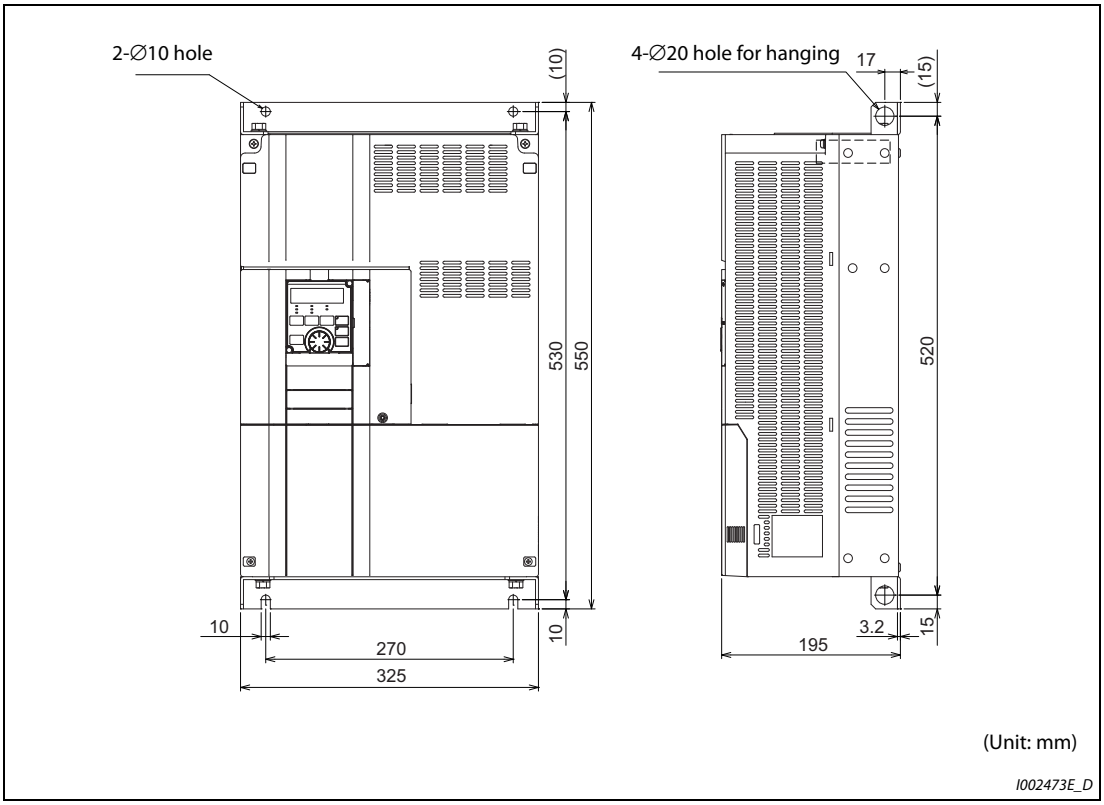


***Fig. 8-5:*** *Dimensions FR-A820-01540(30K), FR-A840-00770(30K)*

**FR-A820-01870(37K), 02330(45K), 03160(55K), 03800(75K), 04750(90K), FR-A840-00930(37K), 01160(45K), 01800(55K), 02160(75K), 02600(90K), 03250(110K), 03610(132K)**

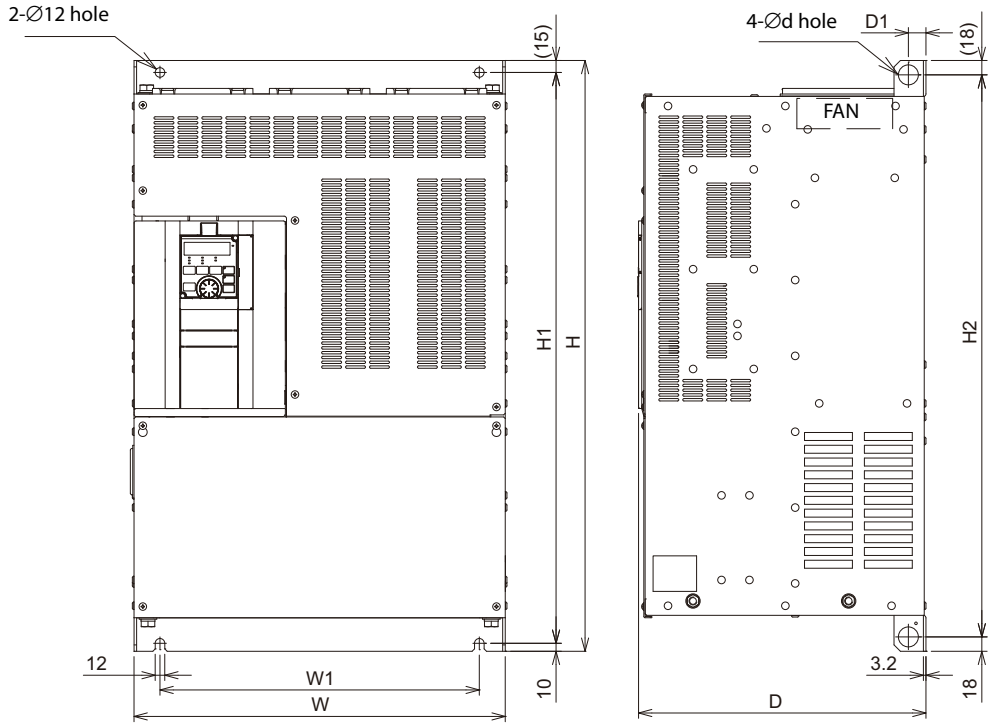


| Inverter model | W | W1 | H | H1 | H2 | d | D | D1 |
|---|---|---|---|---|---|---|---|---|
| FR-A820-01870(37K), 02330(45K)<br>FR-A840-00930(37K), 01160(45K), 01800(55K)① | 435 | 380 | 550 | 525 | 514 | 25 | 250 | 24 |
| FR-A820-03160(55K) ① | 465 | 410 | 700 | 675 | 664 | 25 | 250 | 22 |
| FR-A820-03800(75K) ①, 04750(90K) ① | 465 | 400 | 740 | 715 | 704 | 24 | 360 | 22 |
| FR-A840-02160(75K) ①, 02600(90K) ① | 465 | 400 | 620 | 595 | 584 | 24 | 300 | 22 |
| FR-A840-03250(110K) ① , 03610(132K) ① | 465 | 400 | 740 | 715 | 704 | 25 | 360 | 22 |

① When using a motor with a capacity of 75 kW or higher, always connect a DC reactor (FR-HEL), which is available as an option.

(Unit: mm)

I002810E_D

***Fig. 8-6:*** *Dimensions FR-A820-01870(37K), 02330(45K), 03160(55K), 03800(75K), 04750(90K), FR-A840-00930(37K), 01160(45K), 01800(55K), 02160(75K), 02600(90K), 03250(110K), 03610(132K)*

**FR-A840-04320(160K), 04810(185K)**

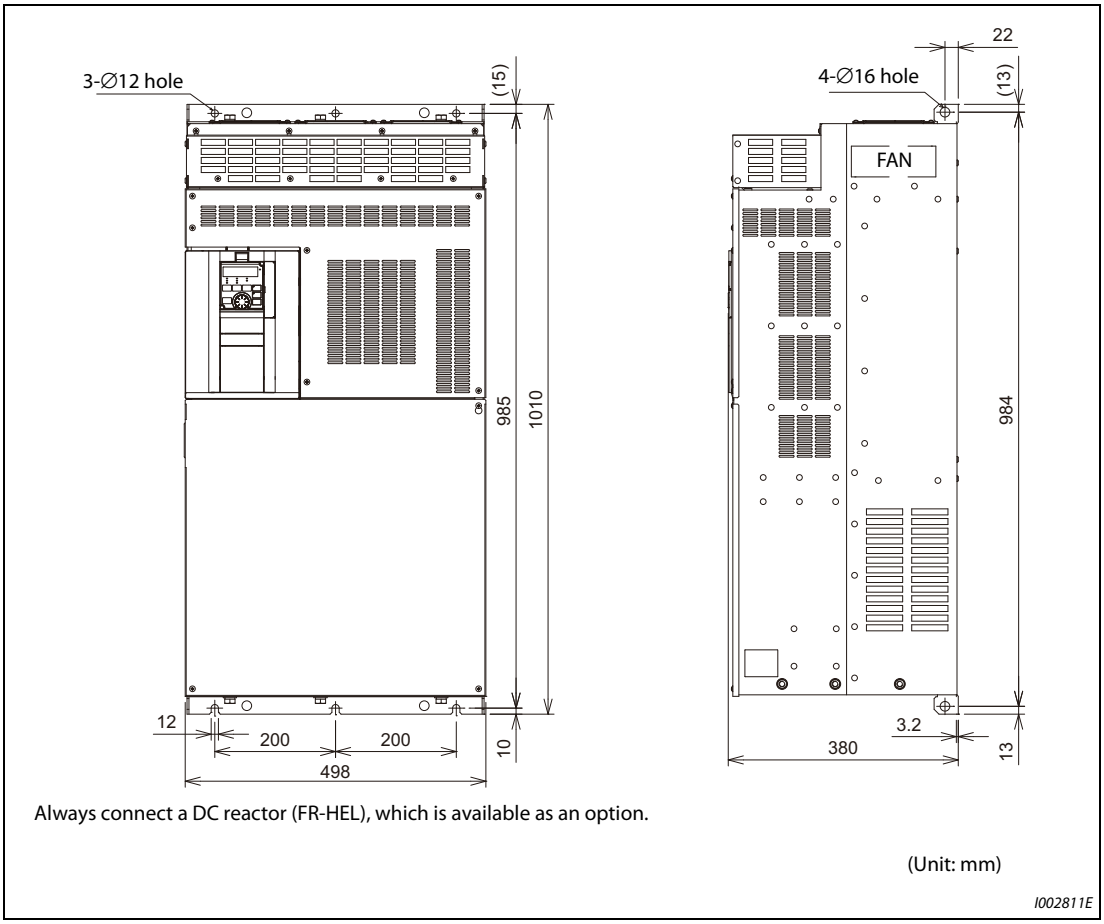


***Fig. 8-7:*** *Dimensions FR-A840-04320(160K), 04810(185K)*

**FR-A840-05470(220K), 06100(250K), 06830(280K)**

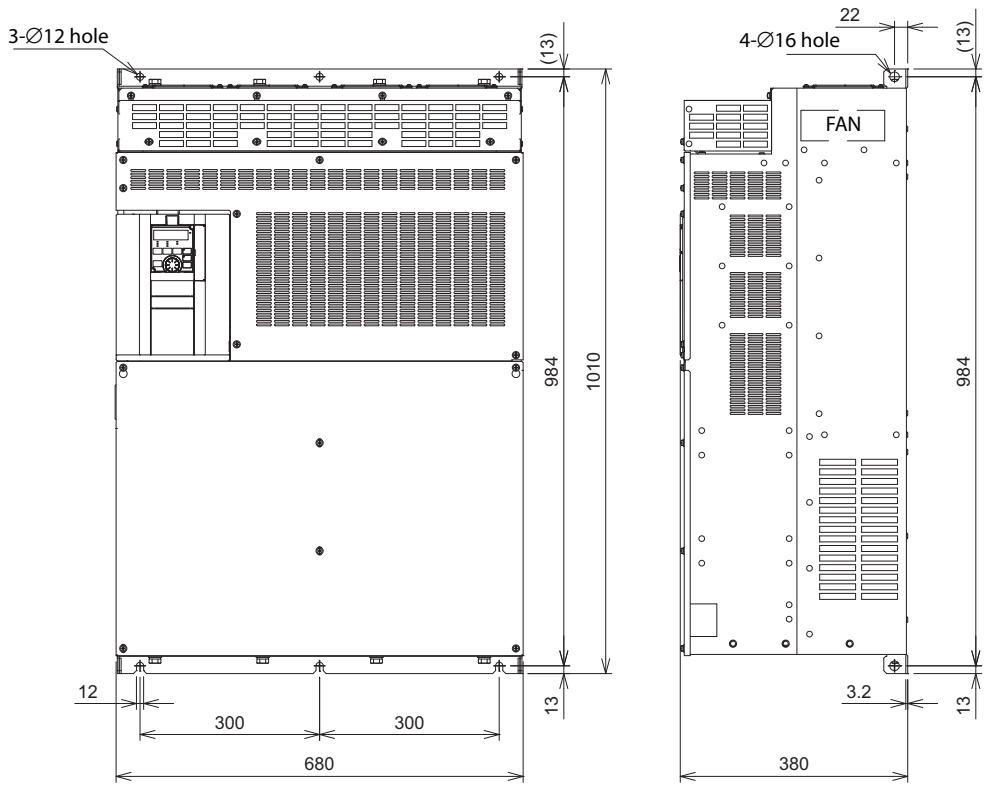


Always connect a DC reactor (FR-HEL), which is available as an option.

(Unit: mm)

I002812E

***Fig. 8-8:*** *Dimensions FR-A840-05470(220K), 06100(250K), 06830(280K)*

### Operation panel (FR-DU08)

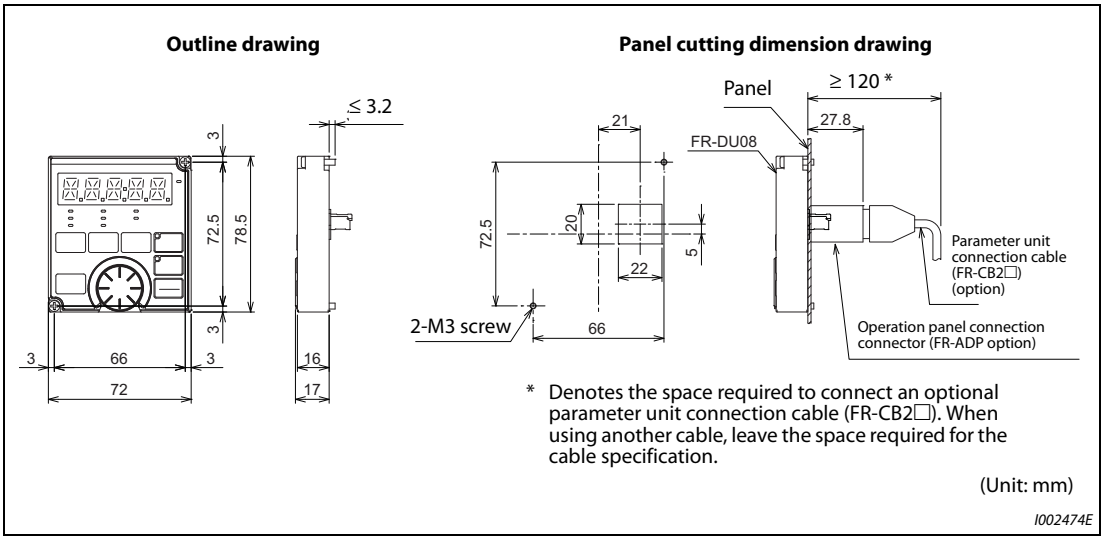


***Fig. 8-9:*** *Operation panel (FR-DU08)*

## 8.4.2 Dedicated motor outline dimension drawings

### Dedicated motor (SF-V5RU(H)) outline dimension drawings (standard horizontal type)

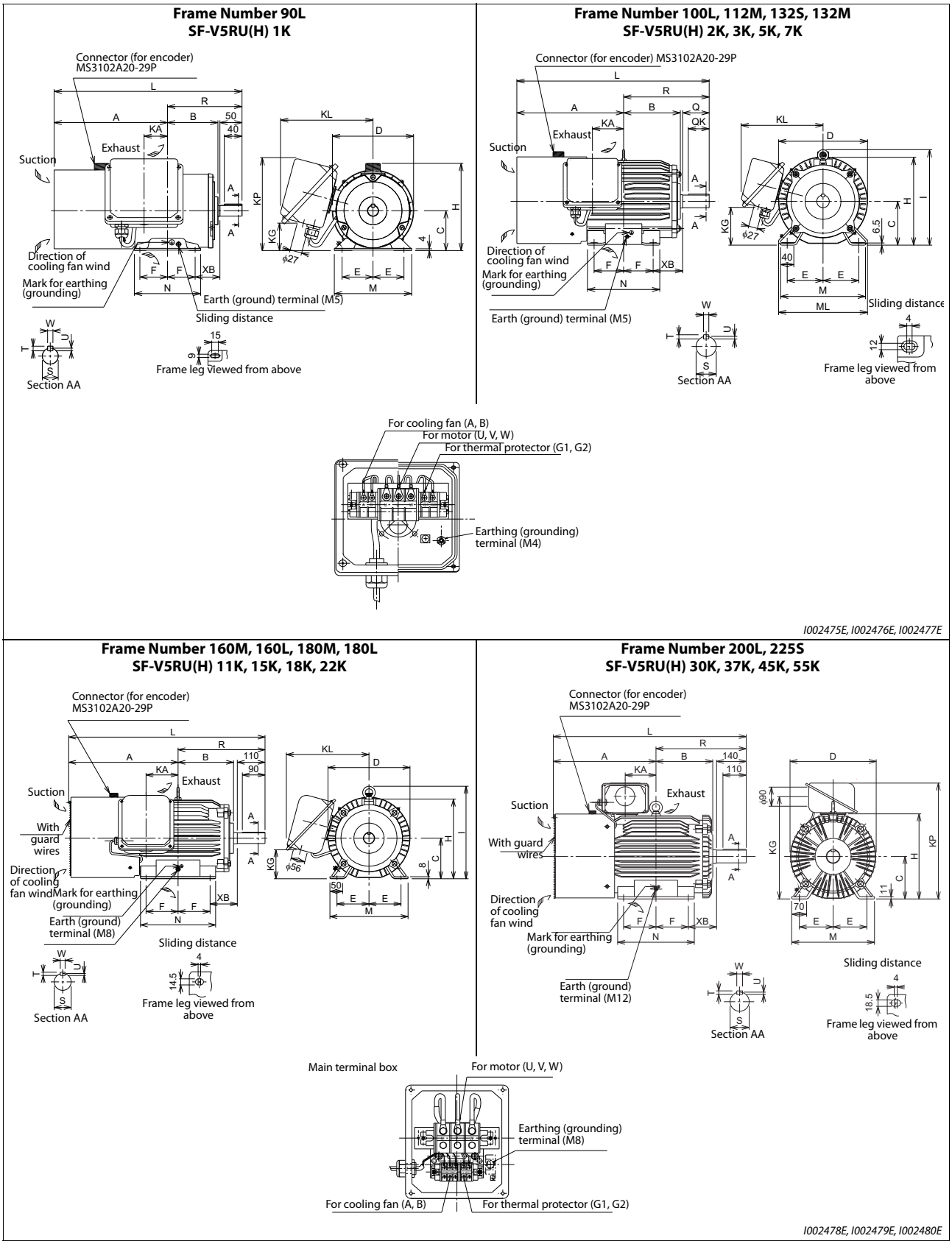


***Fig. 8-10:*** *Dedicated motor (SF-V5RU(H)) outline dimension drawings (standard horizontal type)*

**NOTE**

Make sure to earth the earth terminal of the frame installation foot as well as the earth terminal in the terminal box.

### Dimensions table

| SF-V5RU□K | | 1 | 2 | 3 | 5 | 7 | 11 | 15 | 18 | 22 | — | 30 | 37, 45 | 55 |
|---|---|---|---|---|---|---|---|---|---|---|---|---|---|---|
| SF-V5RU□K1 | | — | 1 | 2 | 3 | 5 | 7 | 11 | — | 15 | 18 | — | 22, 30 | 37 |
| SF-V5RU□K3 | | — | — | 1 | 2 | 3 | 5 | 7 | — | 11 | 15 | — | 18, 22 | 30 |
| SF-V5RU□K4 | | — | — | — | — | 1 | 2 | 3 | — | — | 5 | 7 | — | 11, 15 |
| Frame No. | | 90L | 100L | 112M | 132S | 132M | 160M | 160L | 180M | | 180L | 200L | | 225S |
| Mass [kg] | | 24 | 33 | 41 | 52 | 62 | 99 | 113 | 138 | 160 | 200 | 238 | 255 | 320 |
| Motor | A | 256.5 | 284 | 278 | 303 | 322 | 412 | 434 | 438.5 | | 457.5 | 483.5 | | 500 |
| | B | 114 | 128 | 135 | 152 | 171 | 198 | 220 | 225.5 | | 242.5 | 267.5 | | 277 |
| | C | 90 | 100 | 112 | 132 | 132 | 160 | 160 | 180 | | 180 | 200 | | 225 |
| | D | 183.6 | 207 | 228 | 266 | 266 | 318 | 318 | 363 | | 363 | 406 | | 446 |
| | E | 70 | 80 | 95 | 108 | 108 | 127 | 127 | 139.5 | | 139.5 | 159 | | 178 |
| | F | 62.5 | 70 | 70 | 70 | 89 | 105 | 127 | 120.5 | | 139.5 | 152.5 | | 143 |
| | H | 198 | 203.5 | 226 | 265 | 265 | 316 | 316 | 359 | | 359 | 401 | | 446 |
| | I | — | 230 | 253 | 288 | 288 | 367 | 367 | 410 | | 410 | — | | — |
| | KA | 53 | 65 | 69 | 75 | 94 | 105 | 127 | 127 | | 146 | 145 | | 145 |
| | KG | 65 | 78 | 93 | 117 | 117 | 115 | 115 | 139 | | 139 | 487 | | 533 |
| | KL(KP) | 220 (210) | 231 | 242 | 256 | 256 | 330 | 330 | 352 | | 352 | (546) | | (592) |
| | L | 425 | 477 | 478 | 542 | 580 | 735 | 779 | 790 | | 828 | 909 | | 932 |
| | M | 175 | 200 | 230 | 256 | 256 | 310 | 310 | 335 | | 335 | 390 | | 428 |
| | ML | — | 212 | 242 | 268 | 268 | — | — | — | | — | — | | — |
| | N | 150 | 180 | 180 | 180 | 218 | 254 | 298 | 285 | | 323 | 361 | | 342 |
| | XB | 56 | 63 | 70 | 89 | 89 | 108 | 108 | 121 | | 121 | 133 | | 149 |
| | Q | — | 60 | 60 | 80 | 80 | — | — | — | | — | — | | — |
| | QK | — | 45 | 45 | 63 | 63 | — | — | — | | — | — | | — |
| | R | 168.5 | 193 | 200 | 239 | 258 | 323 | 345 | 351.5 | | 370.5 | 425.5 | | 432 |
| | S | 24j6 | 28j6 | 28j6 | 38k6 | 38k6 | 42k6 | 42k6 | 48k6 | | 55m6 | 60m6 | | 65m6 |
| | T | 7 | 7 | 7 | 8 | 8 | 8 | 8 | 9 | | 10 | 11 | | 11 |
| | U | 4 | 4 | 4 | 5 | 5 | 5 | 5 | 5.5 | | 6 | 7 | | 7 |
| | W | 8 | 8 | 8 | 10 | 10 | 12 | 12 | 14 | | 16 | 18 | | 18 |
| Terminal screw size | U, V, W | M6 | M6 | M6 | M6 | M6 | M8 | M8 | M8 | | M8 | M10 | | M10 |
| | A, B, (C) | M4 | M4 | M4 | M4 | M4 | M4 | M4 | M4 | | M4 | M4 | | M4 |
| | G1, G2 | M4 | M4 | M4 | M4 | M4 | M4 | M4 | M4 | | M4 | M4 | | M4 |

***Tab. 8-11:*** *Dimensions table (Unit: mm)*

**NOTES**

Install the motor on the floor and use it with the shaft horizontal.

Leave an enough clearance between the fan suction port and wall to ensure adequate cooling. Also, check that the ventilation direction of a fan is from the opposite load side to the load side.

The size difference of top and bottom of the shaft center height is $^{0}_{-0.5}$

The 400 V class motor has -H at the end of its type name.

## Dedicated motor (SF-V5RU(H)) outline dimension drawings (standard horizontal type with brake)

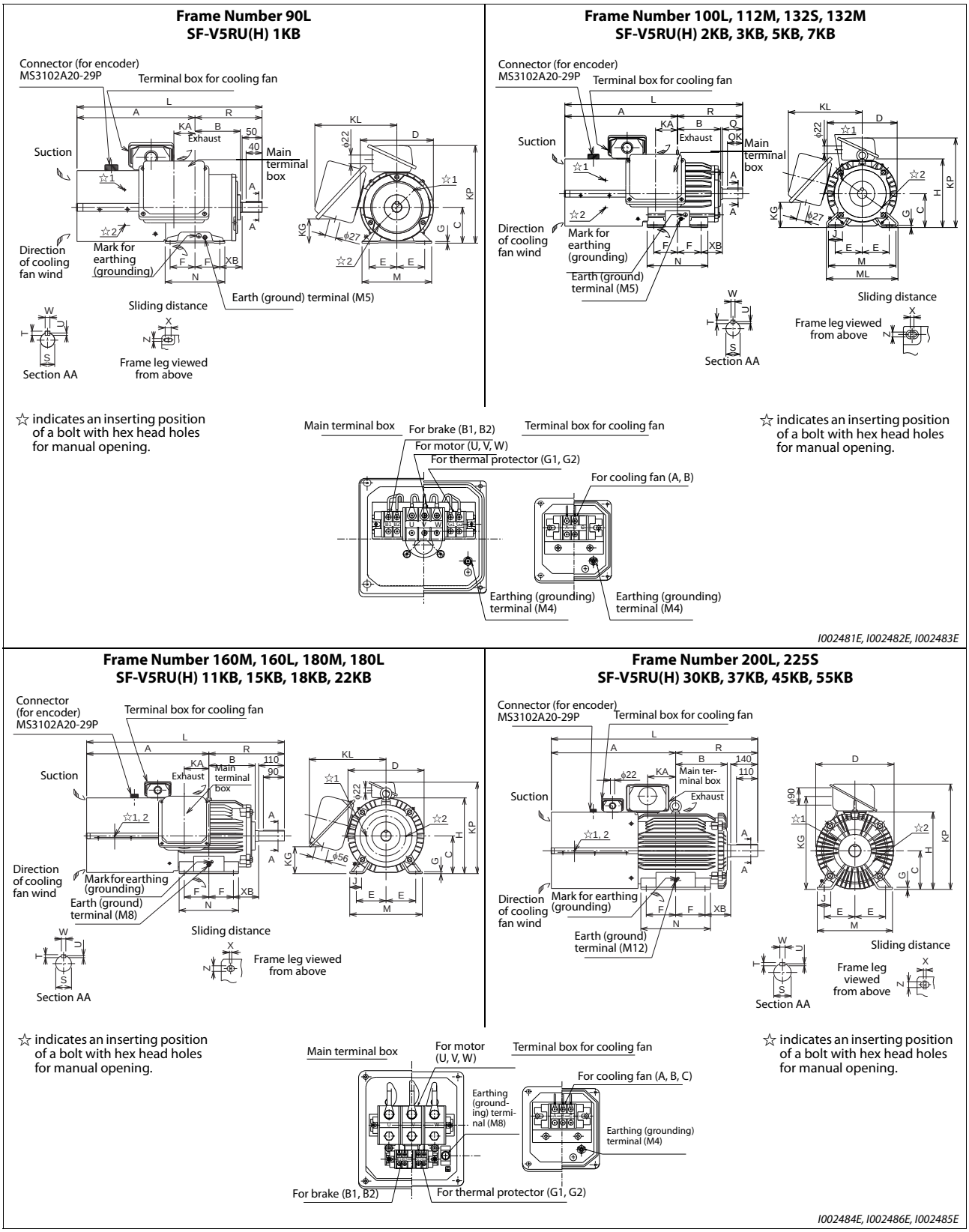


***Fig. 8-11:*** *Dedicated motor (SF-V5RU(H)) outline dimension drawings (standard horizontal type with brake)*

**NOTE** Make sure to earth the earth terminal of the frame installation foot as well as the earth terminal in the terminal box.

### Dimensions table

| SF-V5RU□KB | | 1 | 2 | 3 | 5 | 7 | 11 | 15 | 18 | 22 | — | 30 | 37, 45 | 55 |
|---|---|---|---|---|---|---|---|---|---|---|---|---|---|---|
| SF-V5RU□K1B | | — | 1 | 2 | 3 | 5 | 7 | 11 | — | 15 | 18 | — | 22, 30 | 37 |
| SF-V5RU□K3B | | — | — | 1 | 2 | 3 | 5 | 7 | — | 11 | 15 | — | 18, 22 | 30 |
| SF-V5RU□K4B | | — | — | — | — | 1 | 2 | 3 | — | — | 5 | 7 | — | 11, 15 |
| Frame No. | | 90L | 100L | 112M | 132S | 132M | 160M | 160L | 180M | | 180L | 200L | | 225S |
| Mass [kg] | | 29 | 46 | 53 | 70 | 80 | 140 | 155 | 185 | 215 | 255 | 305 | 330 | 395 |
| Motor | A | 296.5 | 333.5 | 355 | 416 | 435 | 522.5 | 544.5 | 568.5 | | 587.5 | 644.5 | | 659 |
| | B | 114 | 128 | 135 | 152 | 171 | 198 | 220 | 225.5 | | 242.5 | 267.5 | | 277 |
| | C | 90 | 100 | 112 | 132 | 132 | 160 | 160 | 180 | | 180 | 200 | | 225 |
| | D | 183.6 | 207 | 228 | 266 | 266 | 318 | 318 | 363 | | 363 | 406 | | 446 |
| | E | 70 | 80 | 95 | 108 | 108 | 127 | 127 | 139.5 | | 139.5 | 159 | | 178 |
| | F | 62.5 | 70 | 70 | 70 | 89 | 105 | 127 | 120.5 | | 139.5 | 152.5 | | 143 |
| | G | 4 | 6.5 | 6.5 | 6.5 | 6.5 | 8 | 8 | 8 | | 8 | 11 | | 11 |
| | H | — | — | — | — | — | — | — | — | | — | — | | — |
| | I | — | — | — | — | — | — | — | — | | — | — | | — |
| | J | — | 40 | 40 | 40 | 40 | 50 | 50 | 50 | | 50 | 70 | | 70 |
| | KA | 53 | 65 | 69 | 75 | 94 | 105 | 127 | 127 | | 146 | 145 | | 145 |
| | KD | 27 | 27 | 27 | 27 | 27 | 56 | 56 | 56 | | 56 | 90 | | 90 |
| | KG | 65 | 78 | 93 | 117 | 117 | 115 | 115 | 139 | | 139 | 487 | | 533 |
| | KL | 220 | 231 | 242 | 256 | 256 | 330 | 330 | 352 | | 352 | — | | — |
| | KP | 245 | 265 | 290 | 329 | 329 | 391 | 391 | 428 | | 428 | 546 | | 592 |
| | L | 465 | 526.5 | 555 | 655 | 693 | 845.5 | 889.5 | 920 | | 958 | 1070 | | 1091 |
| | M | 175 | 200 | 230 | 256 | 256 | 310 | 310 | 335 | | 335 | 390 | | 428 |
| | ML | — | 212 | 242 | 268 | 268 | — | — | — | | — | — | | — |
| | N | 150 | 180 | 180 | 180 | 218 | 254 | 298 | 285 | | 323 | 361 | | 342 |
| | X | 15 | 4 | 4 | 4 | 4 | 4 | 4 | 4 | | 4 | 4 | | 4 |
| | XB | 56 | 63 | 70 | 89 | 89 | 108 | 108 | 121 | | 121 | 133 | | 149 |
| | Z | 9 | 12 | 12 | 12 | 12 | 14.5 | 14.5 | 14.5 | | 14.5 | 18.5 | | 18.5 |
| Shaft end | Q | 50 | 60 | 60 | 80 | 80 | 110 | 110 | 110 | | 110 | 140 | | 140 |
| | QK | 40 | 45 | 45 | 63 | 63 | 90 | 90 | 90 | | 90 | 110 | | 110 |
| | R | 168.5 | 193 | 200 | 239 | 258 | 323 | 345 | 351.5 | | 370.5 | 425.5 | | 432 |
| | S | 24j6 | 28j6 | 28j6 | 38k6 | 38k6 | 42k6 | 42k6 | 48k6 | | 55m6 | 60m6 | | 65m6 |
| | T | 7 | 7 | 7 | 8 | 8 | 8 | 8 | 9 | | 10 | 11 | | 11 |
| | U | 4 | 4 | 4 | 5 | 5 | 5 | 5 | 5.5 | | 6 | 7 | | 7 |
| | W | 8 | 8 | 8 | 10 | 10 | 12 | 12 | 14 | | 16 | 18 | | 18 |
| Terminal screw size | U, V, W | M6 | M6 | M6 | M6 | M6 | M8 | M8 | M8 | | M8 | M10 | | M10 |
| | A, B, (C) | M4 | M4 | M4 | M4 | M4 | M4 | M4 | M4 | | M4 | M4 | | M4 |
| | G1, G2 | M4 | M4 | M4 | M4 | M4 | M4 | M4 | M4 | | M4 | M4 | | M4 |
| | B1, B2 | M4 | M4 | M4 | M4 | M4 | M4 | M4 | M4 | | M4 | M4 | | M4 |

***Tab. 8-12:*** *Dimensions table (Unit: mm)*

**NOTES**

Install the motor on the floor and use it with the shaft horizontal.

Leave an enough clearance between the fan suction port and wall to ensure adequate cooling. Also, check that the ventilation direction of a fan is from the opposite load side to the load side.

The size difference of top and bottom of the shaft center height is $^{0}_{0.5}$

The 400V class motor has -H at the end of its type name.

Since a brake power device is a stand-alone, install it inside the enclosure.
(This device should be arranged at the customer side. Refer to the FR-A800 catalog.)

## Dedicated motor (SF-V5RU(H)) outline dimension drawings (flange type)

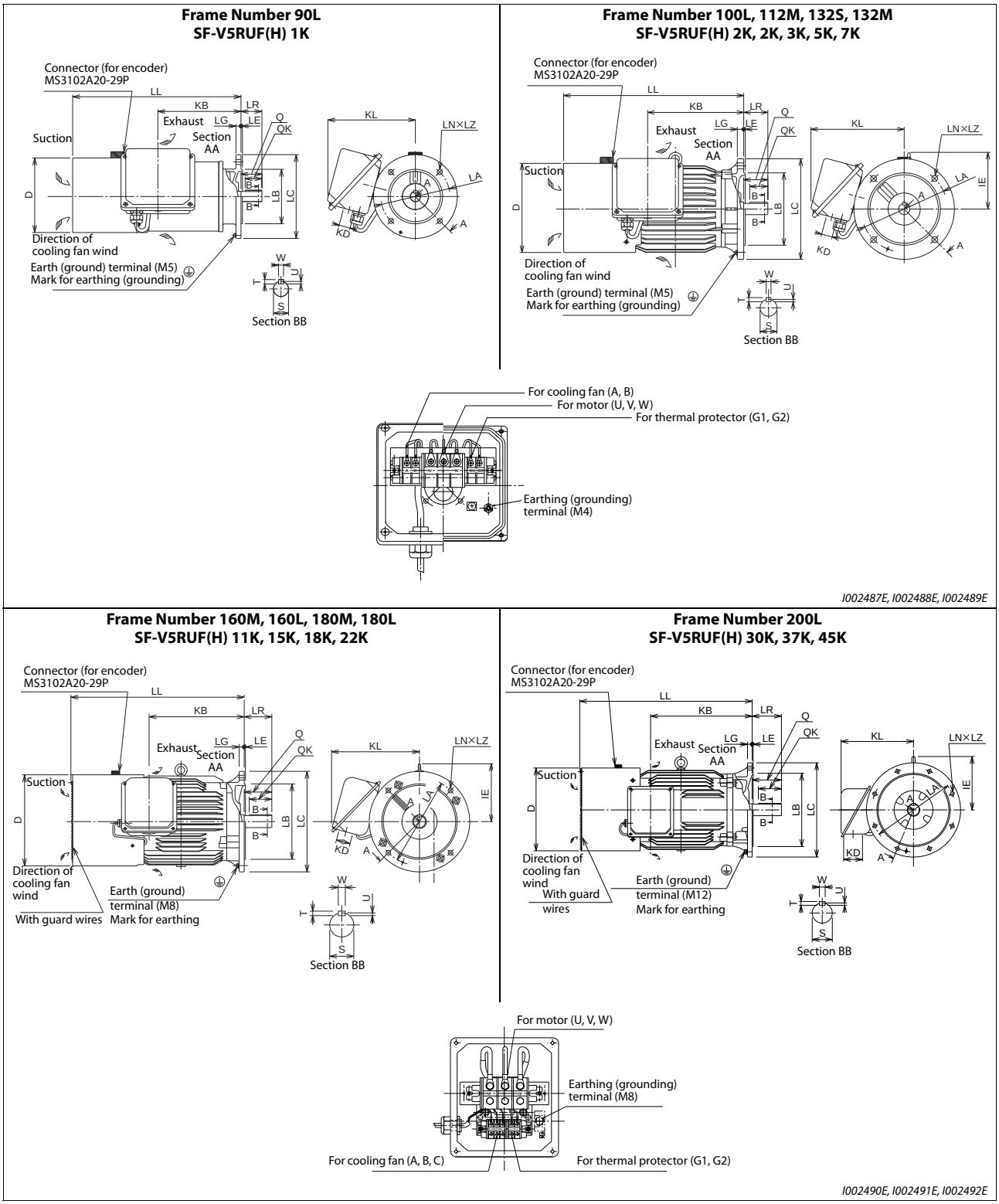


***Fig. 8-12:*** *Dedicated motor (SF-V5RU(H)) outline dimension drawings (flange type)*

**NOTE** Make sure to earth the earth terminal of the flange section as well as the earth terminal in the terminal box.

### Dimensions table

| SF-V5RUF□K | | 1 | 2 | 3 | 5 | 7 | 11 | 15 | 18 | 22 | — | 30 | 37, 45 |
|---|---|---|---|---|---|---|---|---|---|---|---|---|---|
| SF-V5RUF□K1 | | — | 1 | 2 | 3 | 5 | 7 | 11 | — | 15 | 18 | — | 22, 30 |
| SF-V5RUF□K3 | | — | — | 1 | 2 | 3 | 5 | 7 | — | 11 | 15 | — | 18, 22 |
| SF-V5RUF□K4 | | — | — | — | — | 1 | 2 | 3 | — | — | 5 | 7 | — |
| Flange No. | | FF165 | FF215 | FF215 | FF265 | FF265 | FF300 | FF300 | FF350 | | FF350 | FF400 | |
| Frame No. | | 90L | 100L | 112M | 132S | 132M | 160M | 160L | 180M | | 180L | 200L | |
| Mass [kg] | | 26.5 | 37 | 46 | 65 | 70 | 110 | 125 | 160 | 185 | 225 | 270 | 290 |
| Motor | D | 183.6 | 207 | 228 | 266 | 266 | 318 | 318 | 363 | | 363 | 406 | |
| | IE | — | 130 | 141 | 156 | 156 | 207 | 207 | 230 | | 230 | 255 | |
| | KB | 198.5 | 213 | 239 | 256 | 294 | 318 | 362 | 378.5 | | 416.5 | 485 | |
| | KD | 27 | 27 | 27 | 27 | 27 | 56 | 56 | 56 | | 56 | 90 | |
| | KL | 220 | 231 | 242 | 256 | 256 | 330 | 330 | 352 | | 352 | 346 | |
| | LA | 165 | 215 | 215 | 265 | 265 | 300 | 300 | 350 | | 350 | 400 | |
| | LB | 130j6 | 180j6 | 180j6 | 230j6 | 230j6 | 250j6 | 250j6 | 300j6 | | 300j6 | 350j6 | |
| | LC | 200 | 250 | 250 | 300 | 300 | 350 | 350 | 400 | | 400 | 450 | |
| | LE | 3.5 | 4 | 4 | 4 | 4 | 5 | 5 | 5 | | 5 | 5 | |
| | LG | 12 | 16 | 16 | 20 | 20 | 20 | 20 | 20 | | 20 | 22 | |
| | LL | 402 | 432 | 448 | 484 | 522 | 625 | 669 | 690 | | 728 | 823.5 | |
| | LN | 4 | 4 | 4 | 4 | 4 | 4 | 4 | 4 | | 4 | 8 | |
| | LZ | 12 | 14.5 | 14.5 | 14.5 | 14.5 | 18.5 | 18.5 | 18.5 | | 18.5 | 18.5 | |
| Shaft end | LR | 50 | 60 | 60 | 80 | 80 | 110 | 110 | 110 | | 110 | 140 | |
| | Q | 50 | 60 | 60 | 80 | 80 | 110 | 110 | 110 | | 110 | 140 | |
| | QK | 40 | 45 | 45 | 63 | 63 | 90 | 90 | 90 | | 90 | 110 | |
| | S | 24j6 | 28j6 | 28j6 | 38k6 | 38k6 | 42k6 | 42k6 | 48k6 | | 55m6 | 60m6 | |
| | T | 7 | 7 | 7 | 8 | 8 | 8 | 8 | 9 | | 10 | 11 | |
| | U | 4 | 4 | 4 | 5 | 5 | 5 | 5 | 5.5 | | 6 | 7 | |
| | W | 8 | 8 | 8 | 10 | 10 | 12 | 12 | 14 | | 16 | 18 | |
| Terminal screw size | U, V, W | M6 | M6 | M6 | M6 | M6 | M8 | M8 | M8 | | M8 | M10 | |
| | A, B, (C) | M4 | M4 | M4 | M4 | M4 | M4 | M4 | M4 | | M4 | M4 | |
| | G1, G2 | M4 | M4 | M4 | M4 | M4 | M4 | M4 | M4 | | M4 | M4 | |

***Tab. 8-13:*** *Dimensions table (Unit: mm)*

**NOTES**

Install the motor on the floor and use it with the shaft horizontal.
For use under the shaft, the protection structure of the cooling fan is IP20.

Leave an enough clearance between the fan suction port and wall to ensure adequate cooling.
Also, check that the ventilation direction of a fan is from the opposite load side to the load side.

The size difference of top and bottom of the shaft center height is $^{0}_{0.5}$

The 400 V class motor has -H at the end of its type name.

## Dedicated motor (SF-V5RU(H)) outline dimension drawings (flange type with brake)

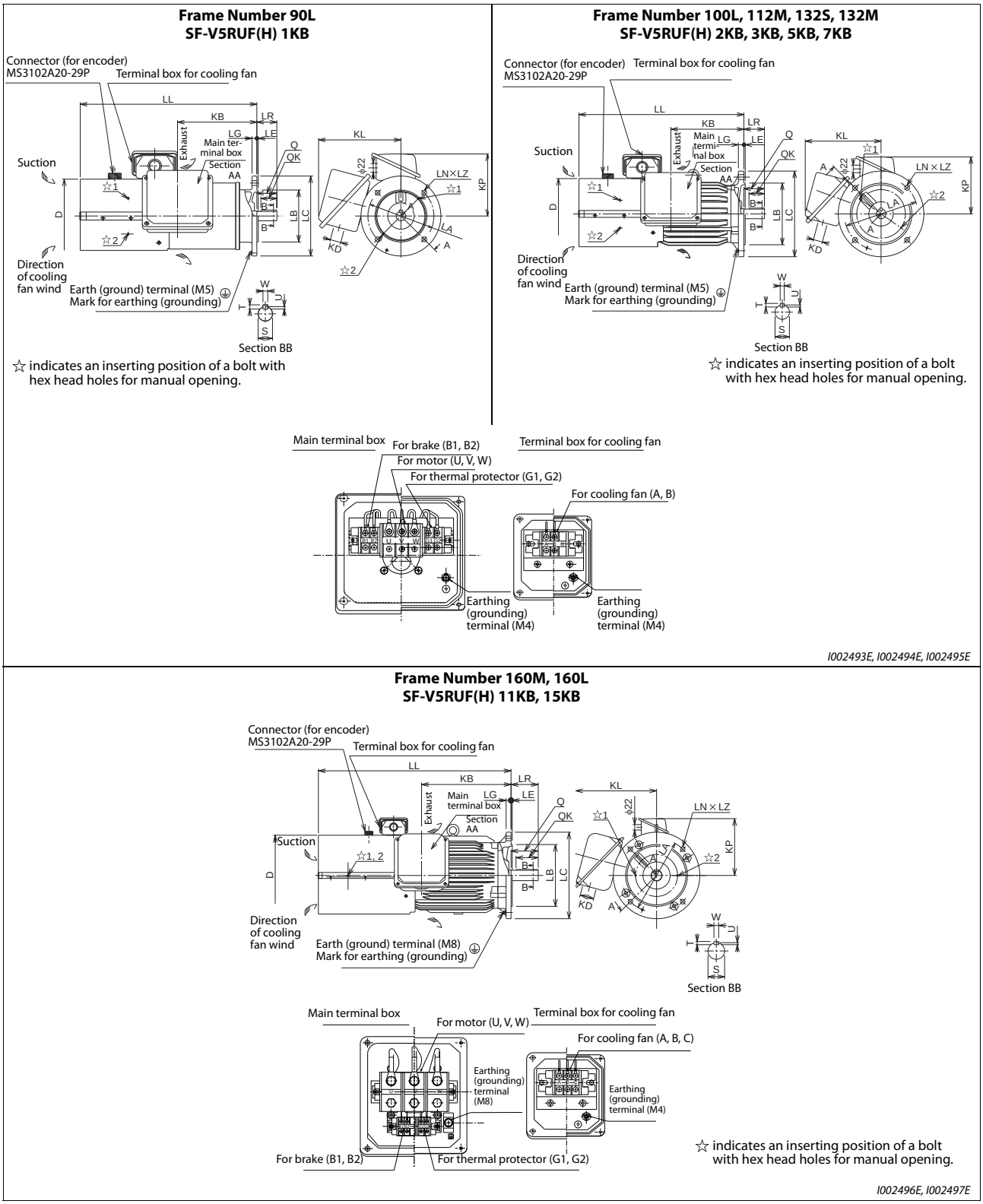


***Fig. 8-13:*** *Dedicated motor (SF-V5RU(H)) outline dimension drawings (flange type with brake)*

**NOTE** Make sure to earth the earth terminal of the flange section as well as the earth terminal in the terminal box.

### Dimensions table

| SF-V5RUF□KB | | 1 | 2 | 3 | 5 | 7 | 11 | 15 |
|---|---|---|---|---|---|---|---|---|
| SF-V5RUF□K1B | | — | 1 | 2 | 3 | 5 | 7 | 11 |
| SF-V5RUF□K3B | | — | — | 1 | 2 | 3 | 5 | 7 |
| SF-V5RUF□K4B | | — | — | — | — | 1 | 2 | 3 |
| Flange No. | | FF165 | FF215 | FF215 | FF265 | FF265 | FF300 | FF300 |
| Frame No. | | 90L | 100L | 112M | 132S | 132M | 160M | 160L |
| Mass [kg] | | 31.5 | 50 | 58 | 83 | 88 | 151 | 167 |
| Motor | D | 183.6 | 207 | 228 | 266 | 266 | 318 | 318 |
| | KB | 198.5 | 213 | 239 | 256 | 294 | 318 | 362 |
| | KD | 27 | 27 | 27 | 27 | 27 | 56 | 56 |
| | KL | 220 | 231 | 242 | 256 | 256 | 330 | 330 |
| | KP | 155 | 165 | 178 | 197 | 197 | 231 | 231 |
| | LA | 165 | 215 | 215 | 265 | 265 | 300 | 300 |
| | LB | 130j6 | 180j6 | 180j6 | 230j6 | 230j6 | 250j6 | 250j6 |
| | LC | 200 | 250 | 250 | 300 | 300 | 350 | 350 |
| | LE | 3.5 | 4 | 4 | 4 | 4 | 5 | 5 |
| | LG | 12 | 16 | 16 | 20 | 20 | 20 | 20 |
| | LL | 442 | 481.5 | 525 | 597 | 635 | 735.5 | 779.5 |
| | LN | 4 | 4 | 4 | 4 | 4 | 4 | 4 |
| | LZ | 12 | 14.5 | 14.5 | 14.5 | 14.5 | 18.5 | 18.5 |
| Shaft end | LR | 50 | 60 | 60 | 80 | 80 | 110 | 110 |
| | Q | 50 | 60 | 60 | 80 | 80 | 110 | 110 |
| | QK | 40 | 45 | 45 | 63 | 63 | 90 | 90 |
| | S | 24j6 | 28j6 | 28j6 | 38k6 | 38k6 | 42k6 | 42k6 |
| | T | 7 | 7 | 7 | 8 | 8 | 8 | 8 |
| | U | 4 | 4 | 4 | 5 | 5 | 5 | 5 |
| | W | 8 | 8 | 8 | 10 | 10 | 12 | 12 |
| Terminal screw size | U, V, W | M6 | M6 | M6 | M6 | M6 | M8 | M8 |
| | A, B, (C) | M4 | M4 | M4 | M4 | M4 | M4 | M4 |
| | B1, B2 | M4 | M4 | M4 | M4 | M4 | M4 | M4 |
| | G1, G2 | M4 | M4 | M4 | M4 | M4 | M4 | M4 |

***Tab. 8-14:*** *Dimensions table (Unit: mm)*

**NOTES**

Install the motor on the floor and use it with the shaft horizontal.

Leave an enough clearance between the fan suction port and wall to ensure adequate cooling. Also, check that the ventilation direction of a fan is from the opposite load side to the load side.

The size difference of top and bottom of the shaft center height is $^{0}_{-0.5}$

The 400 V class motor has -H at the end of its type name.

Since a brake power device is a stand-alone, install it inside the enclosure.
(This device should be arranged at the customer side. Refer to the FR-A800 catalog.)

## Dedicated motor (SF-THY) outline dimension drawings (1500r/min series)

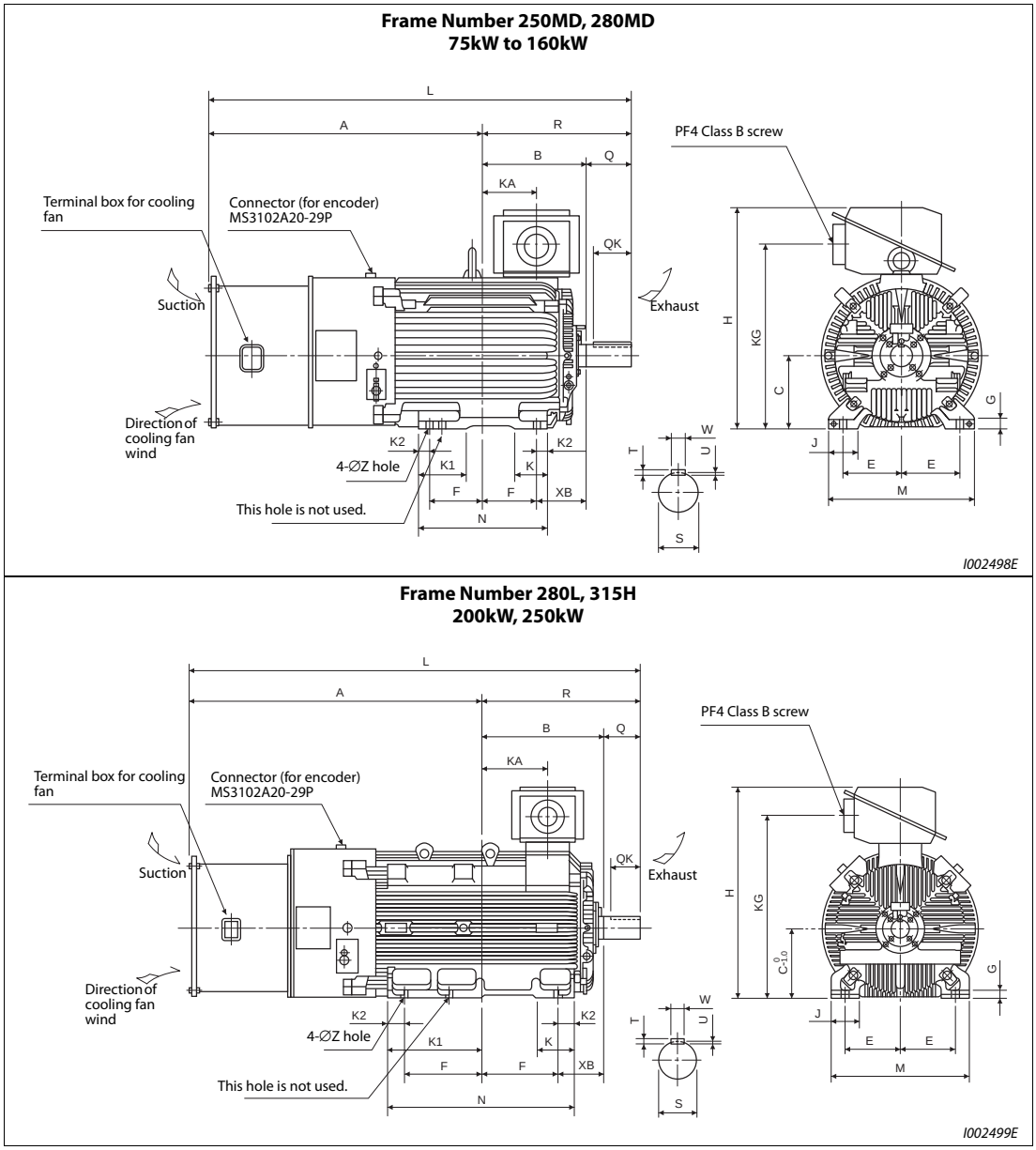


***Fig. 8-14:*** *Dedicated motor (SF-THY) outline dimension drawings (1500r/min series)*

### Dimensions table

| Output [kW] | | 75 | 90 | 110 | 132 | 160 | 200 | 250 |
|---|---|---|---|---|---|---|---|---|
| Frame No. | | 250MD | 250MD | 280MD | 280MD | 280MD | 280L | 315H |
| Mass [kg] | | 610 | 660 | 870 | 890 | 920 | 1170 | 1630 |
| Motor | A | 988.5 | 988.5 | 1049.5 | 1049.5 | 1049.5 | 1210.5 | 1343 |
| | B | 340.5 | 340.5 | 397.5 | 397.5 | 397.5 | 416.5 | 565 |
| | C | 250 | 250 | 280 | 280 | 280 | 280 | 315 |
| | D | 557 | 557 | 607 | 607 | 607 | 652 | 717 |
| | E | 203 | 203 | 228.5 | 228.5 | 228.5 | 228.5 | 254 |
| | F | 174.5 | 174.5 | 209.5 | 209.5 | 209.5 | 228.5 | 355 |
| | G | 30 | 30s | 30 | 30 | 30 | 30 | 35 |
| | H | 775 | 775 | 845 | 845 | 845 | 885 | 965 |
| | J | 100 | 100 | 110 | 110 | 110 | 110 | 130 |
| | K | 130 | 130 | 130 | 130 | 130 | 160 | 175 |
| | K1 | 168 | 168 | 181 | 181 | 181 | 160 | 428 |
| | K2 | 50 | 50 | 40 | 40 | 40 | 75 | 80 |
| | L | 1471 | 1471 | 1619 | 1619 | 1619 | 1799 | 2084 |
| | M | 486 | 486 | 560 | 560 | 560 | 560 | 636 |
| | N | 449 | 449 | 449 | 449 | 499 | 607 | 870 |
| | R | 482.5 | 482.5 | 569.5 | 569.5 | 569.5 | 588.5 | 741 |
| | Z | 24 | 24 | 24 | 24 | 24 | 24 | 28 |
| | XB | 168 | 168 | 190 | 190 | 190 | 190 | 216 |
| | KA | 157.5 | 157.5 | 210.5 | 210.5 | 210.5 | 214.5 | 306 |
| | KG | 635 | 635 | 705 | 705 | 705 | 745 | 825 |
| Shaft end size | Q | 140 | 140 | 170 | 170 | 170 | 170 | 170 |
| | QK | 110 | 110 | 140 | 140 | 140 | 140 | 140 |
| | S | ϕ75m6 | ϕ75m6 | ϕ85m6 | ϕ85m6 | ϕ85m6 | ϕ85m6 | ϕ95m6 |
| | W | 20 | 20 | 22 | 22 | 22 | 22 | 25 |
| | T | 12 | 12 | 14 | 14 | 14 | 14 | 14 |
| | U | 7.5 | 7.5 | 9 | 9 | 9 | 9 | 9 |

***Tab. 8-15:*** *Dimensions table (Unit: mm)*

**NOTE**

The tolerance of the top and bottom of the center shaft height *C is $^{0}_{-0.5}$ for the 250 frame and $^{0}_{-1.0}$ for the 280 frame or more.

# A Appendix

## A.1 For customers replacing the conventional model with this inverter

### A.1.1 Replacement of the FR-A700 series

#### Differences and compatibility with the FR-A700 series

| Item | | FR-A700 | FR-A800 |
|---|---|---|---|
| Control method | | • V/F control<br>• Advanced magnetic flux vector control<br>• Real sensorless vector control<br>• Vector control (with plug-in option)<br>• PM sensorless vector control (IPM motor) | • V/F control<br>• Advanced magnetic flux vector control<br>• Real sensorless vector control<br>• Vector control (with plug-in option)<br>• PM sensorless vector control (IPM motor/SPM motor) |
| Added functions | | — | USB host function<br>Safety stop function<br>etc. |
| Brake transistor (brake resistor usable) | | • Built in for the FR-A720-0.4K to 22K<br>• Built in for the FR-A740-0.4K to 22K | • Built in for the FR-A820-00046(0.4K) to 01250(22K)<br>• Built in for the FR-A840-00023(0.4K) to 03160(55K) |
| Maximum output frequency | V/F control | 400 Hz | 590 Hz |
| | Advanced magnetic flux vector control | 120 Hz | 400 Hz |
| | Real sensorless vector control | 120 Hz | 400 Hz |
| | Vector control | 120 Hz | 400 Hz |
| | PM sensorless vector control (MM-CF) | 300 Hz | 400 Hz |
| PID control | | Turn the X14 signal ON to enable PID control. | The X14 signal does not need to be assigned. (PID control is available by the Pr. 128 setting.)<br>The PID pre-charge function and dancer control are added. |
| Automatic restart after instantaneous power failure | | Turn the CS signal ON to restart. | CS signal assignment not required. (Restart is enabled with the Pr. 57 setting only.) |
| Number of motor poles V/F control switching | | The V/F switching signal (X18) is valid when Pr. 81 = "12 to 20 (2 to 10 poles)". | Pr. 81 = "12 (12 poles)"<br>X18 is valid regardless of the Pr. 81 setting. (The Pr. 81 settings "14 to 20" are not available.) |
| PTC thermistor input | | Input from the terminal AU (the function of the terminal AU is switched by a switch.) | Input from the terminal 2. (The function of the<br>terminal 2 is switched by the Pr. 561 setting.) |
| USB connector | | B connector | Mini B connector |
| Control circuit terminal block | | Removable terminal block (screw type) | Removable terminal block (spring clamp type) |
| Terminal response level | | The FR-A800's I/O terminals have better response level than the FR-A700's terminals. By setting Pr. 289 "Inverter output terminal filter" and Pr. 699 "Input terminal filter," the terminal response level can be compatible with that of FR-A700. Set to approximately 5 to 8 ms and adjust the setting according to the system. | |

***Tab. A-1:*** *Differences between FR-A700 and FR-A800 (1)*

| Item | FR-A700 | FR-A800 |
|---|---|---|
| PU | • FR-DU07 (4-digit LED)<br>• FR-PU07 | • FR-DU08 (5-digit LED)<br>• FR-PU07 (Some functions, such as parameter copy, are unavailable.)<br>• FR-DU07 is not supported. |
| Plug-in option | Dedicated plug-in options (not interchangeable) | |
| Communication option | Connected to the connector 3 | Connected to the connector 1 |
| Installation size | • For standard models, installation size is compatible for all capacities. (Replacement between the same capacities does not require new mounting holes.)<br>• For separated converter types, installation size is not compatible. (New mounting holes are required.) | |
| Converter | Built-in for all capacities | An optional converter unit (FR-CC2) is required for separated converter types. |
| DC reactor | The 75K or higher comes with a DC reactor (FR-HEL). | For the FR-A820-03800(75K) or higher, the FRA840-02160(75K) or higher, and when a 75 kW or higher motor is used, select a DC reactor suitable for the applicable motor capacity. (A DC reactor is not included.)<br>Separated converter types (converter unit FR-CC2) and IP55 compatible models have a built-in DC reactor. |

***Tab. A-1:*** *Differences between FR-A700 and FR-A800 (2)*

**Installation precautions**

- Removal procedure of the front cover is different. (Refer to page 2-7.)
- Plug-in options of the FR-A700 series are not compatible.
- Operation panel (FR-DU07) cannot be used.

**Wiring precautions**

The spring clamp type terminal block has changed to the screw type. Use of blade terminals is recommended.

**Instructions for continuous use of the FR-PU07 (parameter unit)**

- For the FR-A800 series, many functions (parameters) have been added. When setting these parameters, the parameter names and setting ranges are not displayed.
- Only the parameter with the numbers up to "999" can be read and set. The parameters with the numbers after "999" cannot be read or set.
- Many protective functions have been added for the FR-A800 series. These functions are available, but all faults are displayed as "Fault". When the faults history is checked, "ERR" appears. Added faults will not appear on the parameter unit. (However, MT1 to MT3 are displayed as MT.)
- Parameter copy/verification function are not available.

**Copying parameter settings**

The FR-A700 series' parameter settings can be easily copied to the FR-A800 series by using the setup software (FR Configurator2). (Not supported by the setup software FR-SW3-SETUP or older.)

## A.1.2 Replacement of the FR-A500(L) series

**Installation precautions**

- Installation size is compatible for replacing the FR-A520(L)-0.4K to 90K, FR-A540(L)-0.4K to 7.5K, 18.5K to 55K, 110K, 160K, or 220K. New mounting holes are required for replacing models with other capacities.
- To use the same mounting holes of the FR-A540-11K or 15K for the A800 series, the optional installation interchange attachment (FR-AAT) is necessary.
- The heatsink protrusion attachment is not interchangeable.

  The enclosure cut dimensions of the FR-A520-3.7K or lower, FR-A520-30K, FR-A520-55K or higher, FR-A540-3.7K or lower, FR-A540-11K and 15K, and FR-A540-75K or higher are not compatible.

**NOTE**

For the installation size and the outline dimensions of the separated converter type, refer to the FR-A802 (Separated Converter Type) Instruction Manual (Hardware).

# A.2 Specification comparison between PM sensorless vector control and induction motor control

| Item | PM sensorless vector control (MM-CF) | | Induction motor control |
|---|---|---|---|
| Applicable motor | • IPM motor MM-CF series (0.5 to 7.0 kW) (Refer to page 8-8.)<br>• IPM motors other than MM-CF (tuning required) ① | | Induction motor ① |
| Starting torque | High frequency superposition control | 200% (200% for the 1.5 kW or lower with MM-CF, 150% for the 2.0 kW or higher) | 200% (FR-A820-00250(3.7K) or lower and FR-A840-00126(3.7K) or lower)<br>150% (5.5K or higher)<br>under Real sensorless vector control and vector control |
| | Current synchronization operation | 50% | |
| Zero speed | High frequency superposition control | Available (Select the HD rating for zero-speed 200%.) | Available under Real sensorless vector control and vector control |
| | Current synchronization operation | Not available | |
| Carrier frequency | High frequency superposition control | 6 kHz (Pr. 72 = "0 to 9 "),<br>10 kHz (Pr. 72 = "10 to 13"),<br>14 kHz (Pr. 72 = "14 or 15")<br>(6 kHz in a low-speed range of 10 kHz or higher.<br>2 kHz is not selectable.) | • Any value in the range of 0.75 kHz to 14.5 kHz (FR-A820-03160(55K) or lower and FR-A840-01800(55K) or lower)<br>• 0.75 kHz to 6 kHz (FR-A820-03800(75K) or higher and FR-A840-02160(75K) or higher) |
| | Current synchronization operation | 2 kHz (Pr. 72 = "0 to 5"),<br>6 kHz (Pr. 72 = "6 to 9"),<br>10 kHz (Pr. 72 = "10 to 13"),<br>14 kHz (Pr. 72 = "14 or 15")<br>(6 kHz in a low-speed range of 10 kHz or higher.) | |
| Automatic restart after instantaneous power failure | No startup waiting time.<br>Using the regeneration avoidance function or retry function together is recommended. | | Startup waiting time exists. |
| Startup delay | Startup delay of about 0.1 s for magnetic pole position detection. | | No startup delay (when online auto tuning is not performed at startup). |
| Driving by the commercial power supply | Cannot be driven by the commercial power supply. | | Can be driven by the commercial power supply. (Other than vector control dedicated motor.) |
| Operation during coasting | While the motor is coasting, potential is generated across motor terminals. | | While the motor is coasting, potential is not generated across motor terminals. |
| Torque control | Not available | | Available under Real sensorless vector control and vector control. |
| Position control | High frequency superposition control | Available (sensorless) | Available under vector control. |
| | Current synchronization operation | Not available | |

***Tab. A-2:*** *Differences between PM sensorless vector control and induction motor control*

① For the motor capacity, the rated motor current should be equal to or less than the rated inverter current. (It must be 0.4 kW or higher.)
If a motor with substantially low rated current compared with the rated inverter current is used, speed and torque accuracies may deteriorate due to torque ripples, etc. Set the rated motor current to about 40% or higher of the rated inverter current.

**NOTES**

Before wiring, make sure that the motor is stopped. Otherwise you may get an electric shock.

Never connect an IPM motor to the commercial power supply.

No slippage occurs with an IPM motor because of its characteristic. If an IPM motor, which took over an induction motor, is driven at the same speed as for the general-purpose motor, the running speed of the IPM motor becomes faster by the amount of the general-purpose motor's slippage. Adjust the speed command to run the IPM motor at the same speed as the induction motor, as required.

# A.3 Parameters (function codes) and instruction codes under different control methods

① Instruction codes are used to read and write parameters in accordance with the Mitsubishi inverter protocol of RS-485 communication.
(For RS-485 communication, refer to page 5-587.)

② Function availability under each control method is shown as below:
O: Available
×: Not available
Δ: Available only during position control set by parameter

③ For "parameter copy", "parameter clear", and "all parameter clear", "O" indicates the function is available, and "×" indicates the function is not available.

④ These parameters are not cleared by the parameter clear (all parameter clear) command, which are sent through RS-485 communication. (For RS-485 communication, refer to page 5-587.)

⑤ Reading and writing via the PU connector are available.

Symbols in the table indicate parameters that operate when the options are connected.

AP FR-A8AP, AR FR-A8AR, AX FR-A8AX, AY FR-A8AY,
NC FR-A8NC, NCE FR-A8NCE, ND FR-A8ND, NP FR-A8NP

**NOTE** When a communication option is installed, parameter clear (lock release) during password lock (Pr. 297 ≠ "9999") can be performed only from the communication option.

| Pr. | Name | Instruction code ① | | | Control method ② | | | | | | | | | Parameter | | |
|---|---|---|---|---|---|---|---|---|---|---|---|---|---|---|---|---|
| | | Read | Write | Extended | V/F | Magnetic flux | Vector Spped control | Vector Torque control | Vector Position control | Sensorless Spped control | Sensorless Torque control | PM Spped control | PM Position control | Copy ③ | Clear ③ | All clear ③ |
| 0 | Torque boost | 00 | 80 | 0 | O | x | x | x | x | x | x | x | x | O | O | O |
| 1 | Maximum frequency | 01 | 81 | 0 | O | O | O | O | O | O | O | O | O | O | O | O |
| 2 | Minimum frequency | 02 | 82 | 0 | O | O | O | O | x | O | O | O | x | O | O | O |
| 3 | Base frequency | 03 | 83 | 0 | O | x | x | x | x | x | x | x | x | O | O | O |
| 4 | Multi-speed setting (high speed) | 04 | 84 | 0 | O | O | O | O | Δ | O | O | O | Δ | O | O | O |
| 5 | Multi-speed setting (middle speed) | 05 | 85 | 0 | O | O | O | O | Δ | O | O | O | Δ | O | O | O |
| 6 | Multi-speed setting (low speed) | 06 | 86 | 0 | O | O | O | O | Δ | O | O | O | Δ | O | O | O |
| 7 | Acceleration time | 07 | 87 | 0 | O | O | O | O | Δ | O | O | O | Δ | O | O | O |
| 8 | Deceleration time | 08 | 88 | 0 | O | O | O | O | Δ | O | O | O | Δ | O | O | O |
| 9 | Electronic thermal O/L relay | 09 | 89 | 0 | O | O | O | O | O | O | O | O | O | O | O | O |
| 10 | DC injection brake operation frequency | 0A | 8A | 0 | O | O | O | O | x | O | O | O | x | O | O | O |
| 11 | DC injection brake operation time | 0B | 8B | 0 | O | O | O | O | x | O | O | O | x | O | O | O |
| 12 | DC injection brake operation voltage | 0C | 8C | 0 | O | O | x | x | x | x | x | x | x | O | O | O |
| 13 | Starting frequency | 0D | 8D | 0 | O | O | O | O | x | O | O | O | x | O | O | O |
| 14 | Load pattern selection | 0E | 8E | 0 | O | x | x | x | x | x | x | x | x | O | O | O |
| 15 | Jog frequency | 0F | 8F | 0 | O | O | O | O | x | O | O | O | x | O | O | O |

***Tab. A-3:*** *Parameter list with instruction codes (1)*

| Pr. | Name | Instruction code ① | | | Control method ② | | | | | | | | | Parameter | | |
|---|---|---|---|---|---|---|---|---|---|---|---|---|---|---|---|---|
| | | | | | | | Vector | | | Sensorless | | PM | | | | |
| | | Read | Write | Extended | V/F | Magnetic flux | Spped control | Torque control | Position control | Spped control | Torque control | Spped control | Position control | Copy ③ | Clear ③ | All clear ③ |
| 16 | Jog acceleration/deceleration time | 10 | 90 | 0 | O | O | O | O | x | O | O | O | x | O | O | O |
| 17 | MRS input selection | 11 | 91 | 0 | O | O | O | O | O | O | O | O | O | O | O | O |
| 18 | High speed maximum frequency | 12 | 92 | 0 | O | O | x | x | x | x | x | O | x | O | O | O |
| 19 | Base frequency voltage | 13 | 93 | 0 | O | x | x | x | x | x | x | x | x | O | O | O |
| 20 | Acceleration/deceleration reference frequency | 14 | 94 | 0 | O | O | O | O | Δ | O | O | O | Δ | O | O | O |
| 21 | Acceleration/deceleration time increments | 15 | 95 | 0 | O | O | O | O | Δ | O | O | O | Δ | O | O | O |
| 22 | Stall prevention operation level (Torque limit level) | 16 | 96 | 0 | O | O | O | x | O | O | x | O | O | O | O | O |
| 23 | Stall prevention operation level compensation factor at double speed | 17 | 97 | 0 | O | O | x | x | x | x | x | x | x | O | O | O |
| 24 | Multi-speed setting (speed 4) | 18 | 98 | 0 | O | O | O | O | Δ | O | O | O | Δ | O | O | O |
| 25 | Multi-speed setting (speed 5) | 19 | 99 | 0 | O | O | O | O | Δ | O | O | O | Δ | O | O | O |
| 26 | Multi-speed setting (speed 6) | 1A | 9A | 0 | O | O | O | O | Δ | O | O | O | Δ | O | O | O |
| 27 | Multi-speed setting (speed 7) | 1B | 9B | 0 | O | O | O | O | Δ | O | O | O | Δ | O | O | O |
| 28 | Multi-speed input compensation selection | 1C | 9C | 0 | O | O | O | O | x | O | O | O | x | O | O | O |
| 29 | Acceleration/deceleration pattern selection | 1D | 9D | 0 | O | O | O | O | x | O | O | O | x | O | O | O |
| 30 | Regenerative function selection | 1E | 9E | 0 | O | O | O | O | O | O | O | O | O | O | O | O |
| 31 | Frequency jump 1A | 1F | 9F | 0 | O | O | O | O | x | O | O | O | x | O | O | O |
| 32 | Frequency jump 1B | 20 | A0 | 0 | O | O | O | O | x | O | O | O | x | O | O | O |
| 33 | Frequency jump 2A | 21 | A1 | 0 | O | O | O | O | x | O | O | O | x | O | O | O |
| 34 | Frequency jump 2B | 22 | A2 | 0 | O | O | O | O | x | O | O | O | x | O | O | O |
| 35 | Frequency jump 3A | 23 | A3 | 0 | O | O | O | O | x | O | O | O | x | O | O | O |
| 36 | Frequency jump 3B | 24 | A4 | 0 | O | O | O | O | x | O | O | O | x | O | O | O |
| 37 | Speed display | 25 | A5 | 0 | O | O | O | O | O | O | O | O | O | O | O | O |
| 41 | Up-to-frequency sensitivity | 29 | A9 | 0 | O | O | O | x | x | O | x | O | x | O | O | O |
| 42 | Output frequency detection | 2A | AA | 0 | O | O | O | O | O | O | O | O | O | O | O | O |
| 43 | Output frequency detection for reverse rotation | 2B | AB | 0 | O | O | O | O | O | O | O | O | O | O | O | O |
| 44 | Second acceleration/ deceleration time | 2C | AC | 0 | O | O | O | O | Δ | O | O | O | Δ | O | O | O |
| 45 | Second deceleration time | 2D | AD | 0 | O | O | O | O | Δ | O | O | O | Δ | O | O | O |
| 46 | Second torque boost | 2E | AE | 0 | O | x | x | x | x | x | x | x | x | O | O | O |
| 47 | Second V/F (base frequency) | 2F | AF | 0 | O | x | x | x | x | x | x | x | x | O | O | O |
| 48 | Second stall prevention operation level | 30 | B0 | 0 | O | O | x | x | x | x | x | x | x | O | O | O |

***Tab. A-3:*** *Parameter list with instruction codes (2)*

| Pr. | Name | Instruction code ① | | | Control method ② | | | | | | | | | Parameter | | |
|---|---|---|---|---|---|---|---|---|---|---|---|---|---|---|---|---|
| | | Read | Write | Extended | V/F | Magnetic flux | Vector | | | Sensorless | | PM | | Copy ③ | Clear ③ | All clear ③ |
| | | | | | | | Spped control | Torque control | Position control | Spped control | Torque control | Spped control | Position control | | | |
| 49 | Second stall prevention operation frequency | 31 | B1 | 0 | O | O | x | x | x | x | x | x | x | O | O | O |
| 50 | Second output frequency detection | 32 | B2 | 0 | O | O | O | O | O | O | O | O | O | O | O | O |
| 51 | Second electronic thermal O/L relay | 33 | B3 | 0 | O | O | O | O | O | O | O | O | O | O | O | O |
| 52 | Operation panel main monitor selection | 34 | B4 | 0 | O | O | O | O | O | O | O | O | O | O | O | O |
| 54 | FM/CA terminal function selection | 36 | B6 | 0 | O | O | O | O | O | O | O | O | O | O | O | O |
| 55 | Frequency monitoring reference | 37 | B7 | 0 | O | O | O | O | O | O | O | O | O | O | O | O |
| 56 | Current monitoring reference | 38 | B8 | 0 | O | O | O | O | O | O | O | O | O | O | O | O |
| 57 | Restart coasting time | 39 | B9 | 0 | O | O | O | O | x | O | O | O | x | O | O | O |
| 58 | Restart cushion time | 3A | BA | 0 | O | O | x | x | x | x | x | x | x | O | O | O |
| 59 | Remote function selection | 3B | BB | 0 | O | O | O | O | x | O | O | O | x | O | O | O |
| 60 | Energy saving control selection | 3C | BC | 0 | O | O | x | x | x | x | x | x | x | O | O | O |
| 61 | Reference current | 3D | BD | 0 | O | O | O | x | x | O | x | x | x | O | O | O |
| 62 | Reference value at acceleration | 3E | BE | 0 | O | O | O | x | x | O | x | x | x | O | O | O |
| 63 | Reference value at deceleration | 3F | BF | 0 | O | O | O | x | x | O | x | x | x | O | O | O |
| 64 | Starting frequency for elevator mode | 40 | C0 | 0 | O | x | x | x | x | x | x | x | x | O | O | O |
| 65 | Retry selection | 41 | C1 | 0 | O | O | O | O | x | O | O | O | x | O | O | O |
| 66 | Stall prevention operation reduction starting frequency | 42 | C2 | 0 | O | O | x | x | x | x | x | x | x | O | O | O |
| 67 | Number of retries at fault occurrence | 43 | C3 | 0 | O | O | O | O | x | O | O | O | x | O | O | O |
| 68 | Retry waiting time | 44 | C4 | 0 | O | O | O | O | x | O | O | O | x | O | O | O |
| 69 | Retry count display erase | 45 | C5 | 0 | O | O | O | O | x | O | O | O | x | O | O | O |
| 70 | Special regenerative brake duty | 46 | C6 | 0 | O | O | O | O | O | O | O | O | O | O | O | O |
| 71 | Applied motor | 47 | C7 | 0 | O | O | O | O | O | O | O | O | O | O | O | O |
| 72 | PWM frequency selection | 48 | C8 | 0 | O | O | O | O | O | O | O | O | O | O | O | O |
| 73 | Analog input selection | 49 | C9 | 0 | O | O | O | O | x | O | O | O | x | O | O | O |
| 74 | Input filter time constant | 4A | CA | 0 | O | O | O | O | x | O | O | O | x | O | O | O |
| 75 | Reset selection/disconnected PU detection/PU stop selection | 4B | CB | 0 | O | O | O | O | O | O | O | O | O | O | x | x |
| 76 | Fault code output selection | 4C | CC | 0 | O | O | O | O | O | O | O | O | O | O | O | O |
| 77 ⑤ | Parameter write selection | 4D | CD | 0 | O | O | O | O | O | O | O | O | O | O | O | O |
| 78 | Reverse rotation prevention selection | 4E | CE | 0 | O | O | O | O | O | O | O | O | O | O | O | O |
| 79 ⑤ | Operation mode selection | 4F | CF | 0 | O | O | O | O | O | O | O | O | O | O | O | O |

***Tab. A-3:*** *Parameter list with instruction codes (3)*

| Pr. | Name | Instruction code ① | | | Control method ② | | | | | | | | | Parameter | | |
|---|---|---|---|---|---|---|---|---|---|---|---|---|---|---|---|---|
| | | Read | Write | Extended | V/F | Magnetic flux | Vector | | | Sensorless | | PM | | Copy ③ | Clear ③ | All clear ③ |
| | | | | | | | Spped control | Torque control | Position control | Spped control | Torque control | Spped control | Position control | | | |
| 80 | Motor capacity | 50 | D0 | 0 | x | O | O | O | O | O | O | O | O | O | O | O |
| 81 | Number of motor poles | 51 | D1 | 0 | x | O | O | O | O | O | O | O | O | O | O | O |
| 82 | Motor excitation current | 52 | D2 | 0 | x | O | O | O | O | O | O | x | O | O | x | O |
| 83 | Rated motor voltage | 53 | D3 | 0 | x | O | O | O | O | O | O | O | O | O | O | O |
| 84 | Rated motor frequency | 54 | D4 | 0 | x | O | O | O | O | O | O | O | O | O | O | O |
| 89 | Speed control gain (Advanced magnetic flux vector) | 59 | D9 | 0 | x | O | x | x | x | x | x | x | x | O | x | O |
| 90 | Motor constant (R1) | 5A | DA | 0 | x | O | O | O | O | O | O | O | O | O | x | O |
| 91 | Motor constant (R2) | 5B | DB | 0 | x | O | O | O | O | O | O | x | O | O | x | O |
| 92 | Motor constant (L1)/d-shaft inductance (Ld) | 5C | DC | 0 | x | O | O | O | O | O | O | O | O | O | x | O |
| 93 | Motor constant (L2)/q-shaft inductance (Lq) | 5D | DD | 0 | x | O | O | O | O | O | O | O | O | O | x | O |
| 94 | Motor constant (X) | 5E | DE | 0 | x | O | O | O | O | O | O | x | O | O | x | O |
| 95 | Online auto tuning selection | 5F | DF | 0 | x | O | O | O | O | O | O | x | O | O | O | O |
| 96 | Auto tuning setting/status | 60 | E0 | 0 | x | O | O | O | O | O | O | O | O | O | x | O |
| 100 | V/F1(first frequency) | 00 | 80 | 1 | O | x | x | x | x | x | x | x | x | O | O | O |
| 101 | V/F1(first frequency voltage) | 01 | 81 | 1 | O | x | x | x | x | x | x | x | x | O | O | O |
| 102 | V/F2(second frequency) | 02 | 82 | 1 | O | x | x | x | x | x | x | x | x | O | O | O |
| 103 | V/F2(second frequency voltage) | 03 | 83 | 1 | O | x | x | x | x | x | x | x | x | O | O | O |
| 104 | V/F3(third frequency) | 04 | 84 | 1 | O | x | x | x | x | x | x | x | x | O | O | O |
| 105 | V/F3(third frequency voltage) | 05 | 85 | 1 | O | x | x | x | x | x | x | x | x | O | O | O |
| 106 | V/F4(fourth frequency) | 06 | 86 | 1 | O | x | x | x | x | x | x | x | x | O | O | O |
| 107 | V/F4(fourth frequency voltage) | 07 | 87 | 1 | O | x | x | x | x | x | x | x | x | O | O | O |
| 108 | V/F5(fifth frequency) | 08 | 88 | 1 | O | x | x | x | x | x | x | x | x | O | O | O |
| 109 | V/F5(fifth frequency voltage) | 09 | 89 | 1 | O | x | x | x | x | x | x | x | x | O | O | O |
| 110 | Third acceleration/deceleration time | 0A | 8A | 1 | O | O | O | O | Δ | O | O | O | Δ | O | O | O |
| 111 | Third deceleration time | 0B | 8B | 1 | O | O | O | O | Δ | O | O | O | Δ | O | O | O |
| 112 | Third torque boost | 0C | 8C | 1 | O | x | x | x | x | x | x | x | x | O | O | O |
| 113 | Third V/F (base frequency) | 0D | 8D | 1 | O | x | x | x | x | x | x | x | x | O | O | O |
| 114 | Third stall prevention operation level | 0E | 8E | 1 | O | O | x | x | x | x | x | x | x | O | O | O |
| 115 | Third stall prevention operation frequency | 0F | 8F | 1 | O | O | x | x | x | x | x | x | x | O | O | O |
| 116 | Third output frequency detection | 10 | 90 | 1 | O | O | O | O | O | O | O | O | O | O | O | O |
| 117 | PU communication station number | 11 | 91 | 1 | O | O | O | O | O | O | O | O | O | O | O④ | O④ |
| 118 | PU communication speed | 12 | 92 | 1 | O | O | O | O | O | O | O | O | O | O | O④ | O④ |
| 119 | PU communication stop bit length /data length | 13 | 93 | 1 | O | O | O | O | O | O | O | O | O | O | O④ | O④ |
| 120 | PU communication parity check | 14 | 94 | 1 | O | O | O | O | O | O | O | O | O | O | O④ | O④ |

***Tab. A-3:*** *Parameter list with instruction codes (4)*

| Pr. | Name | Instruction code ① | | | Control method ② | | | | | | | | | Parameter | | |
|---|---|---|---|---|---|---|---|---|---|---|---|---|---|---|---|---|
| | | Read | Write | Extended | V/F | Magnetic flux | Vector | | | Sensorless | | PM | | Copy ③ | Clear ③ | All clear ③ |
| | | | | | | | Spped control | Torque control | Position control | Spped control | Torque control | Spped control | Position control | | | |
| 121 | Number of PU communication retries | 15 | 95 | 1 | O | O | O | O | O | O | O | O | O | O | O④ | O④ |
| 122 | PU communication check time interval | 16 | 96 | 1 | O | O | O | O | O | O | O | O | O | O | O④ | O④ |
| 123 | PU communication waiting time setting | 17 | 97 | 1 | O | O | O | O | O | O | O | O | O | O | O④ | O④ |
| 124 | PU communication CR/LF selection | 18 | 98 | 1 | O | O | O | O | O | O | O | O | O | O | O④ | O④ |
| 125 | Terminal 2 frequency setting gain frequency | 19 | 99 | 1 | O | O | O | O | x | O | O | O | x | O | x | O |
| 126 | Terminal 4 frequency setting gain frequency | 1A | 9A | 1 | O | O | O | O | x | O | O | O | x | O | x | O |
| 127 | PID control automatic switchover frequency | 1B | 9B | 1 | O | O | O | x | x | O | x | O | x | O | O | O |
| 128 | PID action selection | 1C | 9C | 1 | O | O | O | x | x | O | x | O | x | O | O | O |
| 129 | PID proportional band | 1D | 9D | 1 | O | O | O | x | x | O | x | O | x | O | O | O |
| 130 | PID integral time | 1E | 9E | 1 | O | O | O | x | x | O | x | O | x | O | O | O |
| 131 | PID upper limit | 1F | 9F | 1 | O | O | O | x | x | O | x | O | x | O | O | O |
| 132 | PID lower limit | 20 | A0 | 1 | O | O | O | x | x | O | x | O | x | O | O | O |
| 133 | PID action set point | 21 | A1 | 1 | O | O | O | x | x | O | x | O | x | O | O | O |
| 134 | PID differential time | 22 | A2 | 1 | O | O | O | x | x | O | x | O | x | O | O | O |
| 135 | Electronic bypass sequence selection | 23 | A3 | 1 | O | O | O | x | x | O | x | x | x | O | O | O |
| 136 | MC switchover interlock time | 24 | A4 | 1 | O | O | O | x | x | O | x | x | x | O | O | O |
| 137 | Start waiting time | 25 | A5 | 1 | O | O | O | x | x | O | x | x | x | O | O | O |
| 138 | Bypass selection at a fault | 26 | A6 | 1 | O | O | O | x | x | O | x | x | x | O | O | O |
| 139 | Automatic switchover frequency from inverter to bypass operation | 27 | A7 | 1 | O | O | O | x | x | O | x | x | x | O | O | O |
| 140 | Backlash acceleration stopping frequency | 28 | A8 | 1 | O | O | O | O | x | O | O | O | x | O | O | O |
| 141 | Backlash acceleration stopping time | 29 | A9 | 1 | O | O | O | O | x | O | O | O | x | O | O | O |
| 142 | Backlash deceleration stopping frequency | 2A | AA | 1 | O | O | O | O | x | O | O | O | x | O | O | O |
| 143 | Backlash deceleration stopping time | 2B | AB | 1 | O | O | O | O | x | O | O | O | x | O | O | O |
| 144 | Speed setting switchover | 2C | AC | 1 | O | O | O | O | O | O | O | O | O | O | O | O |
| 145 | PU display language selection | 2D | AD | 1 | O | O | O | O | O | O | O | O | O | O | x | x |
| 147 | Acceleration/deceleration time switching frequency | 2F | AF | 1 | O | O | O | O | Δ | O | O | O | Δ | O | O | O |
| 148 | Stall prevention level at 0 V input | 30 | B0 | 1 | O | O | x | x | x | x | x | x | x | O | O | O |
| 149 | Stall prevention level at 10 V input | 31 | B1 | 1 | O | O | x | x | x | x | x | x | x | O | O | O |
| 150 | Output current detection level | 32 | B2 | 1 | O | O | O | O | O | O | O | O | O | O | O | O |

***Tab. A-3:*** *Parameter list with instruction codes (5)*

| Pr. | Name | Instruction code ① | | | Control method ② | | | | | | | | | Parameter | | |
|---|---|---|---|---|---|---|---|---|---|---|---|---|---|---|---|---|
| | | Read | Write | Extended | V/F | Magnetic flux | Vector Spped control | Vector Torque control | Vector Position control | Sensorless Spped control | Sensorless Torque control | PM Spped control | PM Position control | Copy ③ | Clear ③ | All clear ③ |
| 151 | Output current detection signal delay time | 33 | B3 | 1 | O | O | O | O | O | O | O | O | O | O | O | O |
| 152 | Zero current detection level | 34 | B4 | 1 | O | O | O | O | O | O | O | O | O | O | O | O |
| 153 | Zero current detection time | 35 | B5 | 1 | O | O | O | O | O | O | O | O | O | O | O | O |
| 154 | Voltage reduction selection during stall prevention operation | 36 | B6 | 1 | O | O | x | x | x | x | x | x | x | O | O | O |
| 155 | RT signal function validity condition selection | 37 | B7 | 1 | O | O | O | x | x | O | x | O | x | O | O | O |
| 156 | Stall prevention operation selection | 38 | B8 | 1 | O | O | O | x | x | O | x | O | x | O | O | O |
| 157 | OL signal output timer | 39 | B9 | 1 | O | O | O | O | O | O | O | O | O | O | O | O |
| 158 | AM terminal function selection | 3A | BA | 1 | O | O | O | O | O | O | O | O | O | O | O | O |
| 159 | Automatic switchover frequency range from bypass to inverter operation | 3B | BB | 1 | O | O | O | x | x | O | x | x | x | O | O | O |
| 160 | User group read selection | 00 | 80 | 2 | O | O | O | O | O | O | O | O | O | O | O | O |
| 161 | Frequency setting/key lock operation selection | 01 | 81 | 2 | O | O | O | O | O | O | O | O | O | O | x | O |
| 162 | Automatic restart after instantaneous power failure selection | 02 | 82 | 2 | O | O | O | O | x | O | O | O | x | O | O | O |
| 163 | First cushion time for restart | 03 | 83 | 2 | O | O | x | x | x | x | x | x | x | O | O | O |
| 164 | First cushion voltage for restart | 04 | 84 | 2 | O | O | x | x | x | x | x | x | x | O | O | O |
| 165 | Stall prevention operation level for restart | 05 | 85 | 2 | O | O | x | x | x | x | x | x | x | O | O | O |
| 166 | Output current detection signal retention time | 06 | 86 | 2 | O | O | O | O | O | O | O | O | O | O | O | O |
| 167 | Output current detection operation selection | 07 | 87 | 2 | O | O | O | O | O | O | O | O | O | O | O | O |
| 168 | Parameter for manufacturer setting. Do not set. | | | | | | | | | | | | | | | |
| 169 | | | | | | | | | | | | | | | | |
| 170 | Watt-hour meter clear | 0A | 8A | 2 | O | O | O | O | O | O | O | O | O | O | x | O |
| 171 | Operation hour meter clear | 0B | 8B | 2 | O | O | O | O | O | O | O | O | O | x | x | x |
| 172 | User group registered display/ batch clear | 0C | 8C | 2 | O | O | O | O | O | O | O | O | O | x | x | x |
| 173 | User group registration | 0D | 8D | 2 | O | O | O | O | O | O | O | O | O | x | x | x |
| 174 | User group clear | 0E | 8E | 2 | O | O | O | O | O | O | O | O | O | x | x | x |
| 178 | STF terminal function selection | 12 | 92 | 2 | O | O | O | O | O | O | O | O | O | O | x | O |
| 179 | STR terminal function selection | 13 | 93 | 2 | O | O | O | O | O | O | O | O | O | O | x | O |
| 180 | RL terminal function selection | 14 | 94 | 2 | O | O | O | O | O | O | O | O | O | O | x | O |
| 181 | RM terminal function selection | 15 | 95 | 2 | O | O | O | O | O | O | O | O | O | O | x | O |
| 182 | RH terminal function selection | 16 | 96 | 2 | O | O | O | O | O | O | O | O | O | O | x | O |
| 183 | RT terminal function selection | 17 | 97 | 2 | O | O | O | O | O | O | O | O | O | O | x | O |
| 184 | AU terminal function selection | 18 | 98 | 2 | O | O | O | O | O | O | O | O | O | O | x | O |

***Tab. A-3:*** *Parameter list with instruction codes (6)*

| Pr. | Name | Instruction code ① | | | Control method ② | | | | | | | | | Parameter | | |
|---|---|---|---|---|---|---|---|---|---|---|---|---|---|---|---|---|
| | | Read | Write | Extended | V/F | Magnetic flux | Vector | | | Sensorless | | PM | | Copy ③ | Clear ③ | All clear ③ |
| | | | | | | | Spped control | Torque control | Position control | Spped control | Torque control | Spped control | Position control | | | |
| 185 | JOG terminal function selection | 19 | 99 | 2 | O | O | O | O | O | O | O | O | O | O | x | O |
| 186 | CS terminal function selection | 1A | 9A | 2 | O | O | O | O | O | O | O | O | O | O | x | O |
| 187 | MRS terminal function selection | 1B | 9B | 2 | O | O | O | O | O | O | O | O | O | O | x | O |
| 188 | STOP terminal function selection | 1C | 9C | 2 | O | O | O | O | O | O | O | O | O | O | x | O |
| 189 | RES terminal function selection | 1D | 9D | 2 | O | O | O | O | O | O | O | O | O | O | x | O |
| 190 | RUN terminal function selection | 1E | 9E | 2 | O | O | O | O | O | O | O | O | O | O | x | O |
| 191 | SU terminal function selection | 1F | 9F | 2 | O | O | O | O | O | O | O | O | O | O | x | O |
| 192 | IPF terminal function selection | 20 | A0 | 2 | O | O | O | O | O | O | O | O | O | O | x | O |
| 193 | OL terminal function selection | 21 | A1 | 2 | O | O | O | O | O | O | O | O | O | O | x | O |
| 194 | FU terminal function selection | 22 | A2 | 2 | O | O | O | O | O | O | O | O | O | O | x | O |
| 195 | ABC1 terminal function selection | 23 | A3 | 2 | O | O | O | O | O | O | O | O | O | O | x | O |
| 196 | ABC2 terminal function selection | 24 | A4 | 2 | O | O | O | O | O | O | O | O | O | O | x | O |
| 232 | Multi-speed setting (speed 8) | 28 | A8 | 2 | O | O | O | O | Δ | O | O | O | Δ | O | O | O |
| 233 | Multi-speed setting (speed 9) | 29 | A9 | 2 | O | O | O | O | Δ | O | O | O | Δ | O | O | O |
| 234 | Multi-speed setting (speed 10) | 2A | AA | 2 | O | O | O | O | Δ | O | O | O | Δ | O | O | O |
| 235 | Multi-speed setting (speed 11) | 2B | AB | 2 | O | O | O | O | Δ | O | O | O | Δ | O | O | O |
| 236 | Multi-speed setting (speed 12) | 2C | AC | 2 | O | O | O | O | Δ | O | O | O | Δ | O | O | O |
| 237 | Multi-speed setting (speed 13) | 2D | AD | 2 | O | O | O | O | Δ | O | O | O | Δ | O | O | O |
| 238 | Multi-speed setting (speed 14) | 2E | AE | 2 | O | O | O | O | Δ | O | O | O | Δ | O | O | O |
| 239 | Multi-speed setting (speed 15) | 2F | AF | 2 | O | O | O | O | Δ | O | O | O | Δ | O | O | O |
| 240 | Soft-PWM operation selection | 30 | B0 | 2 | O | O | O | O | O | O | O | O | O | O | O | O |
| 241 | Analog input display unit switchover | 31 | B1 | 2 | O | O | O | O | O | O | O | O | O | O | O | O |
| 242 | Terminal 1 added compensation amount (terminal 2) | 32 | B2 | 2 | O | O | O | O | x | O | O | O | x | O | O | O |
| 243 | Terminal 1 added compensation amount (terminal 4) | 33 | B3 | 2 | O | O | O | O | x | O | O | O | x | O | O | O |
| 244 | Cooling fan operation selection | 34 | B4 | 2 | O | O | O | O | O | O | O | O | O | O | O | O |
| 245 | Rated slip | 35 | B5 | 2 | O | x | x | x | x | x | x | x | x | O | O | O |
| 246 | Slip compensation time constant | 36 | B6 | 2 | O | x | x | x | x | x | x | x | x | O | O | O |
| 247 | Constant-power range slip compensation selection | 37 | B7 | 2 | O | x | x | x | x | x | x | x | x | O | O | O |

***Tab. A-3:*** *Parameter list with instruction codes (7)*

| Pr. | Name | Instruction code ① | | | Control method ② | | | | | | | | | Parameter | | |
|---|---|---|---|---|---|---|---|---|---|---|---|---|---|---|---|---|
| | | Read | Write | Extended | V/F | Magnetic flux | Vector | | | Sensorless | | PM | | Copy ③ | Clear ③ | All clear ③ |
| | | | | | | | Spped control | Torque control | Position control | Spped control | Torque control | Spped control | Position control | | | |
| 248 | Self power management selection | 38 | B8 | 2 | O | O | x | x | x | x | x | O | x | O | O | O |
| 249 | Earth (ground) fault detection at start | 39 | B9 | 2 | O | O | x | x | x | x | x | x | x | O | O | O |
| 250 | Stop selection | 3A | BA | 2 | O | O | O | O | x | O | O | O | x | O | O | O |
| 251 | Output phase loss protection selection | 3B | BB | 2 | O | O | O | O | O | O | O | O | O | O | O | O |
| 252 | Override bias | 3C | BC | 2 | O | O | O | O | x | O | O | O | x | O | O | O |
| 253 | Override gain | 3D | BD | 2 | O | O | O | O | x | O | O | O | x | O | O | O |
| 254 | Main circuit power OFF waiting time | 3E | BE | 2 | O | O | x | x | x | x | x | O | x | O | O | O |
| 255 | Life alarm status display | 3F | BF | 2 | O | O | O | O | O | O | O | O | O | x | x | x |
| 256 | Inrush current limit circuit life display | 40 | C0 | 2 | O | O | O | O | O | O | O | O | O | x | x | x |
| 257 | Control circuit capacitor life display | 41 | C1 | 2 | O | O | O | O | O | O | O | O | O | x | x | x |
| 258 | Main circuit capacitor life display | 42 | C2 | 2 | O | O | O | O | O | O | O | O | O | x | x | x |
| 259 | Main circuit capacitor life measuring | 43 | C3 | 2 | O | O | O | O | O | O | O | O | O | O | O | O |
| 260 | PWM frequency automatic switchover | 44 | C4 | 2 | O | O | O | O | O | O | O | O | O | O | O | O |
| 261 | Power failure stop selection | 45 | C5 | 2 | O | O | O | O | x | O | O | O | x | O | O | O |
| 262 | Subtracted frequency at deceleration start | 46 | C6 | 2 | O | O | O | O | x | O | O | O | x | O | O | O |
| 263 | Subtraction starting frequency | 47 | C7 | 2 | O | O | O | O | x | O | O | O | x | O | O | O |
| 264 | Power-failure deceleration time 1 | 48 | C8 | 2 | O | O | O | O | x | O | O | O | x | O | O | O |
| 265 | Power-failure deceleration time 2 | 49 | C9 | 2 | O | O | O | O | x | O | O | O | x | O | O | O |
| 266 | Power failure deceleration time switchover frequency | 4A | CA | 2 | O | O | O | O | x | O | O | O | x | O | O | O |
| 267 | Terminal 4 input selection | 4B | CB | 2 | O | O | O | O | O | O | O | O | O | O | x | O |
| 268 | Monitor decimal digits selection | 4C | CC | 2 | O | O | O | O | O | O | O | O | O | O | O | O |
| 269 | Parameter for manufacturer setting. Do not set. | | | | | | | | | | | | | | | |
| 270 | Stop-on contact/load torque high-speed frequency control selection | 4E | CE | 2 | O | O | O | x | x | O | x | x | x | O | O | O |
| 271 | High-speed setting maximum current | 4F | CF | 2 | O | O | O | x | x | O | x | x | x | O | O | O |
| 272 | Middle-speed setting minimum current | 50 | D0 | 2 | O | O | O | x | x | O | x | x | x | O | O | O |
| 273 | Current averaging range | 51 | D1 | 2 | O | O | O | x | x | O | x | x | x | O | O | O |
| 274 | Current averaging filter time constant | 52 | D2 | 2 | O | O | O | x | x | O | x | x | x | O | O | O |
| 275 | Stop-on contact excitation current low-speed multiplying factor | 53 | D3 | 2 | x | O | x | x | x | x | x | x | x | O | O | O |
| 276 | PWM carrier frequency at stop-on contact | 54 | D4 | 2 | x | O | x | x | x | O | x | x | x | O | O | O |
| 278 | Brake opening frequency | 56 | D6 | 2 | x | O | O | x | x | O | x | x | x | O | O | O |

***Tab. A-3:*** *Parameter list with instruction codes (8)*

| Pr. | Name | Instruction code ① | | | Control method ② | | | | | | | | | Parameter | | |
|---|---|---|---|---|---|---|---|---|---|---|---|---|---|---|---|---|
| | | Read | Write | Extended | V/F | Magnetic flux | Vector | | | Sensorless | | PM | | Copy ③ | Clear ③ | All clear ③ |
| | | | | | | | Spped control | Torque control | Position control | Spped control | Torque control | Spped control | Position control | | | |
| 279 | Brake opening current | 57 | D7 | 2 | x | O | O | x | x | O | x | x | x | O | O | O |
| 280 | Brake opening current detection time | 58 | D8 | 2 | x | O | O | x | x | O | x | x | x | O | O | O |
| 281 | Brake operation time at start | 59 | D9 | 2 | x | O | O | x | x | O | x | x | x | O | O | O |
| 282 | Brake operation frequency | 5A | DA | 2 | x | O | O | x | x | O | x | x | x | O | O | O |
| 283 | Brake operation time at stop | 5B | DB | 2 | O | O | O | x | x | x | x | x | x | O | O | O |
| 284 | Deceleration detection function selection | 5C | DC | 2 | O | O | O | x | x | O | x | x | x | O | O | O |
| 285 | Overspeed detection frequency (Speed deviation excess detection frequency) | 5D | DD | 2 | x | O | O | x | x | O | x | x | x | O | O | O |
| 286 | Droop gain | 5E | DE | 2 | x | O | O | x | x | O | x | x | x | O | O | O |
| 287 | Droop filter time constant | 5F | DF | 2 | x | x | O | x | x | O | x | x | x | O | O | O |
| 288 | Droop function activation selection | 60 | E0 | 2 | O | O | O | O | O | O | O | O | O | O | O | O |
| 289 | Inverter output terminal filter | 61 | E1 | 2 | O | O | O | O | O | O | O | O | O | O | x | O |
| 290 | Monitor negative output selection | 62 | E2 | 2 | O | O | O | O | O | O | O | O | O | O | O | O |
| 291 | Pulse train I/O selection | 63 | E3 | 2 | O | O | O | O | x | O | O | O | x | O | x | O |
| 292 | Automatic acceleration/ deceleration | 64 | E4 | 2 | O | O | O | x | x | O | x | x | x | O | O | O |
| 293 | Acceleration/deceleration separate selection | 65 | E5 | 2 | O | O | O | x | x | O | x | x | x | O | O | O |
| 294 | UV avoidance voltage gain | 66 | E6 | 2 | O | O | O | O | x | O | O | O | x | O | O | O |
| 295 | Frequency change increment amount setting | 67 | E7 | 2 | O | O | O | O | O | O | O | O | O | O | O | O |
| 296 | Password lock level | 68 | E8 | 2 | O | O | O | O | O | O | O | O | O | O | x | O |
| 297 | Password lock/unlock | 69 | E9 | 2 | O | O | O | O | O | O | O | O | O | O | O | O |
| 298 | Frequency search gain | 6A | EA | 2 | O | O | x | x | x | O | O | x | x | O | x | O |
| 299 | Rotation direction detection selection at restarting | 6B | EB | 2 | O | O | x | x | x | O | x | x | x | O | O | O |
| 300 | BCD input bias AX | 00 | 80 | 3 | O | O | O | O | x | O | O | O | x | O | O | O |
| 301 | BCD input gain AX | 01 | 81 | 3 | O | O | O | O | x | O | O | O | x | O | O | O |
| 302 | BIN input bias AX | 02 | 82 | 3 | O | O | O | O | x | O | O | O | x | O | O | O |
| 303 | BIN input gain AX | 03 | 83 | 3 | O | O | O | O | x | O | O | O | x | O | O | O |
| 304 | Digital input and analog input compensation enable/disable selection AX | 04 | 84 | 3 | O | O | O | O | x | O | O | O | x | O | O | O |
| 305 | Read timing operation selection AX | 05 | 85 | 3 | O | O | O | O | x | O | O | O | x | O | O | O |
| 306 | Analog output signal selection AY | 06 | 86 | 3 | O | O | O | O | O | O | O | O | O | O | O | O |
| 307 | Setting for zero analog output AY | 07 | 87 | 3 | O | O | O | O | O | O | O | O | O | O | O | O |

***Tab. A-3:*** *Parameter list with instruction codes (9)*

| Pr. | Name | Instruction code ① | | | Control method ② | | | | | | | | | Parameter | | |
|---|---|---|---|---|---|---|---|---|---|---|---|---|---|---|---|---|
| | | Read | Write | Extended | V/F | Magnetic flux | Vector Spped control | Vector Torque control | Vector Position control | Sensorless Spped control | Sensorless Torque control | PM Spped control | PM Position control | Copy ③ | Clear ③ | All clear ③ |
| 308 | Setting for maximum analog output AY | 08 | 88 | 3 | o | o | o | o | o | o | o | o | o | o | o | o |
| 309 | Analog output signal voltage/ current switchover AY | 09 | 89 | 3 | o | o | o | o | o | o | o | o | o | o | o | o |
| 310 | Analog meter voltage output selection AY | 0A | 8A | 3 | o | o | o | o | o | o | o | o | o | o | o | o |
| 311 | Setting for zero analog meter voltage output AY | 0B | 8B | 3 | o | o | o | o | o | o | o | o | o | o | o | o |
| 312 | Setting for maximum analog meter voltage output AY | 0C | 8C | 3 | o | o | o | o | o | o | o | o | o | o | o | o |
| 313 | DO0 output selection AY NC | 0D | 8D | 3 | o | o | o | o | o | o | o | o | o | o | x | o |
| 314 | DO1 output selection AY NC | 0E | 8E | 3 | o | o | o | o | o | o | o | o | o | o | x | o |
| 315 | DO2 output selection AY NC | 0F | 8F | 3 | o | o | o | o | o | o | o | o | o | o | x | o |
| 316 | DO3 output selection AY | 10 | 90 | 3 | o | o | o | o | o | o | o | o | o | o | x | o |
| 317 | DO4 output selection AY | 11 | 91 | 3 | o | o | o | o | o | o | o | o | o | o | x | o |
| 318 | DO5 output selection AY | 12 | 92 | 3 | o | o | o | o | o | o | o | o | o | o | x | o |
| 319 | DO6 output selection AY | 13 | 93 | 3 | o | o | o | o | o | o | o | o | o | o | x | o |
| 320 | RA1 output selection AR | 14 | 94 | 3 | o | o | o | o | o | o | o | o | o | o | x | o |
| 321 | RA2 output selection AR | 15 | 95 | 3 | o | o | o | o | o | o | o | o | o | o | x | o |
| 322 | RA3 output selection AR | 16 | 96 | 3 | o | o | o | o | o | o | o | o | o | o | x | o |
| 323 | AM0 0V adjustment AY | 17 | 97 | 3 | o | o | o | o | o | o | o | o | o | o | x | o |
| 324 | AM1 0mA adjustment AY | 18 | 98 | 3 | o | o | o | o | o | o | o | o | o | o | x | o |
| 329 | Digital input unit selection AX | 1D | 9D | 3 | o | o | o | o | x | o | o | o | x | o | x | o |
| 331 | RS-485 communication station number | 1F | 9F | 3 | o | o | o | o | o | o | o | o | o | o | o④ | o④ |
| 332 | RS-485 communication speed | 20 | A0 | 3 | o | o | o | o | o | o | o | o | o | o | o④ | o④ |
| 333 | RS-485 communication stop bit length / data length | 21 | A1 | 3 | o | o | o | o | o | o | o | o | o | o | o④ | o④ |
| 334 | RS-485 communication parity check selection | 22 | A2 | 3 | o | o | o | o | o | o | o | o | o | o | o④ | o④ |
| 335 | RS-485 communication retry count | 23 | A3 | 3 | o | o | o | o | o | o | o | o | o | o | o④ | o④ |
| 336 | RS-485 communication check time interval | 24 | A4 | 3 | o | o | o | o | o | o | o | o | o | o | o④ | o④ |
| 337 | RS-485 communication waiting time setting | 25 | A5 | 3 | o | o | o | o | o | o | o | o | o | o | o④ | o④ |

***Tab. A-3:*** *Parameter list with instruction codes (10)*

| Pr. | Name | Instruction code ① | | | Control method ② | | | | | | | | | Parameter | | |
|---|---|---|---|---|---|---|---|---|---|---|---|---|---|---|---|---|
| | | Read | Write | Extended | V/F | Magnetic flux | Vector Spped control | Vector Torque control | Vector Position control | Sensorless Spped control | Sensorless Torque control | PM Spped control | PM Position control | Copy ③ | Clear ③ | All clear ③ |
| 338 | Communication operation command source | 26 | A6 | 3 | O | O | O | O | O | O | O | O | O | O | O④ | O④ |
| 339 | Communication speed command source | 27 | A7 | 3 | O | O | O | O | O | O | O | O | O | O | O④ | O④ |
| 340 | Communication startup mode selection | 28 | A8 | 3 | O | O | O | O | O | O | O | O | O | O | O④ | O④ |
| 341 | RS-485 communication CR/LF selection | 29 | A9 | 3 | O | O | O | O | O | O | O | O | O | O | O④ | O④ |
| 342 | Communication EEPROM write selection | 2A | AA | 3 | O | O | O | O | O | O | O | O | O | O | O | O |
| 343 | Communication error count | 2B | AB | 3 | O | O | O | O | O | O | O | O | O | x | x | x |
| 345 | DeviceNet address ND | 2D | AD | 3 | O | O | O | O | O | O | O | O | O | O | O④ | O④ |
| 346 | DeviceNet baud rate ND | 2E | AE | 3 | O | O | O | O | O | O | O | O | O | O | O④ | O④ |
| 349 | Communication reset selection NC ND | 31 | B1 | 3 | O | O | O | O | O | O | O | O | O | O | O④ | O④ |
| 350 | Stop position command selection AP | 32 | B2 | 3 | O | O | O | x | x | x | x | x | x | O | O | O |
| 351 | Orientation speed AP | 33 | B3 | 3 | O | O | O | x | x | x | x | x | x | O | O | O |
| 352 | Creep speed AP | 34 | B4 | 3 | O | O | O | x | x | x | x | x | x | O | O | O |
| 353 | Creep switchover position AP | 35 | B5 | 3 | O | O | O | x | x | x | x | x | x | O | O | O |
| 354 | Position loop switchover position AP | 36 | B6 | 3 | O | O | O | x | x | x | x | x | x | O | O | O |
| 355 | DC injection brake start position AP | 37 | B7 | 3 | O | O | O | x | x | x | x | x | x | O | O | O |
| 356 | Internal stop position command AP | 38 | B8 | 3 | O | O | O | x | x | x | x | x | x | O | O | O |
| 357 | Orientation in-position zone AP | 39 | B9 | 3 | O | O | O | x | x | x | x | x | x | O | O | O |
| 358 | Servo torque selection AP | 3A | BA | 3 | O | O | O | x | x | x | x | x | x | O | O | O |
| 359 | Encoder rotation direction AP | 3B | BB | 3 | O | O | O | O | O | x | x | x | O | O | O | O |
| 360 | 16-bit data selection AP | 3C | BC | 3 | O | O | O | x | x | x | x | x | x | O | O | O |
| 361 | Position shift AP | 3D | BD | 3 | O | O | O | x | x | x | x | x | x | O | O | O |
| 362 | Orientation position loop gain AP | 3E | BE | 3 | O | O | O | x | x | x | x | x | x | O | O | O |
| 363 | Completion signal output delay time AP | 3F | BF | 3 | O | O | O | x | x | x | x | x | x | O | O | O |
| 364 | Encoder stop check time AP | 40 | C0 | 3 | O | O | O | x | x | x | x | x | x | O | O | O |
| 365 | Orientation limit AP | 41 | C1 | 3 | O | O | O | x | x | x | x | x | x | O | O | O |
| 366 | Recheck time AP | 42 | C2 | 3 | O | O | O | x | x | x | x | x | x | O | O | O |
| 367 | Speed feedback range AP | 43 | C3 | 3 | O | O | O | x | x | x | x | x | x | O | O | O |
| 368 | Feedback gain AP | 44 | C4 | 3 | O | O | x | x | x | x | x | x | x | O | O | O |

***Tab. A-3:*** *Parameter list with instruction codes (11)*

| Pr. | Name | Instruction code ① | | | Control method ② | | | | | | | | | Parameter | | |
|---|---|---|---|---|---|---|---|---|---|---|---|---|---|---|---|---|
| | | Read | Write | Extended | V/F | Magnetic flux | Vector | | | Sensorless | | PM | | Copy ③ | Clear ③ | All clear ③ |
| | | | | | | | Spped control | Torque control | Position control | Spped control | Torque control | Spped control | Position control | | | |
| 369 | Number of encoder pulses AP | 45 | C5 | 3 | O | O | O | O | O | x | x | x | O | O | O | O |
| 374 | Overspeed detection level | 4A | CA | 3 | x | x | O | O | O | O | O | O | O | O | O | O |
| 376 | Encoder signal loss detection enable/disable selection AP | 4C | CC | 3 | x | x | O | O | O | x | x | x | O | O | O | O |
| 380 | Acceleration S-pattern 1 | 50 | D0 | 3 | O | O | O | O | x | O | O | O | x | O | O | O |
| 381 | Deceleration S-pattern 1 | 51 | D1 | 3 | O | O | O | O | x | O | O | O | x | O | O | O |
| 382 | Acceleration S-pattern 2 | 52 | D2 | 3 | O | O | O | O | x | O | O | O | x | O | O | O |
| 383 | Deceleration S-pattern 2 | 53 | D3 | 3 | O | O | O | O | x | O | O | O | x | O | O | O |
| 384 | Input pulse division scaling factor | 54 | D4 | 3 | O | O | O | O | x | O | O | O | x | O | O | O |
| 385 | Frequency for zero input pulse | 55 | D5 | 3 | O | O | O | O | x | O | O | O | x | O | O | O |
| 386 | Frequency for maximum input pulse | 56 | D6 | 3 | O | O | O | O | x | O | O | O | x | O | O | O |
| 393 | Orientation selection AP | 5D | DD | 3 | x | x | O | x | x | x | x | x | x | O | O | O |
| 396 | Orientation speed gain (P term) AP | 60 | E0 | 3 | x | x | O | x | x | x | x | x | x | O | O | O |
| 397 | Orientation speed integral time AP | 61 | E1 | 3 | x | x | O | x | x | x | x | x | x | O | O | O |
| 398 | Orientation speed gain (D term) AP | 62 | E2 | 3 | x | x | O | x | x | x | x | x | x | O | O | O |
| 399 | Orientation deceleration ratio AP | 63 | E3 | 3 | x | x | O | x | x | x | x | x | x | O | O | O |
| 414 | PLC function operation selection | 0E | 8E | 4 | O | O | O | O | O | O | O | x | O | O | x | x |
| 415 | Inverter operation lock mode setting | 0F | 8F | 4 | O | O | O | O | O | O | O | x | O | O | O | O |
| 416 | Pre-scale function selection | 10 | 90 | 4 | O | O | O | O | O | O | O | x | O | O | O | O |
| 417 | Pre-scale setting value | 11 | 91 | 4 | O | O | O | O | O | O | O | x | O | O | O | O |
| 418 | Extension output terminal filter AY AR | 12 | 92 | 4 | O | O | O | O | O | O | O | O | O | O | x | O |
| 419 | Position command source selection | 13 | 93 | 4 | x | x | x | x | O | x | x | x | O | O | O | O |
| 420 | Command pulse scaling factor numerator (electronic gear numerator) | 14 | 94 | 4 | x | x | x | x | O | x | x | x | O | O | O | O |
| 421 | Command pulse scaling factor denominator multiplication denominator (electronic gear denominator) | 15 | 95 | 4 | x | x | x | x | O | x | x | x | O | O | O | O |
| 422 | Position control gain | 16 | 96 | 4 | x | x | x | x | O | x | x | x | O | O | O | O |
| 423 | Position feed forward gain | 17 | 97 | 4 | x | x | x | x | O | x | x | x | O | O | O | O |
| 424 | Position command acceleration/ deceleration time constant | 18 | 98 | 4 | x | x | x | x | O | x | x | x | O | O | O | O |
| 425 | Position feed forward command filter | 19 | 99 | 4 | x | x | x | x | O | x | x | x | O | O | O | O |
| 426 | In-position width | 1A | 9A | 4 | x | x | x | x | O | x | x | x | O | O | O | O |
| 427 | Excessive level error | 1B | 9B | 4 | x | x | x | x | O | x | x | x | O | O | O | O |
| 428 | Command pulse selection | 1C | 9C | 4 | x | x | x | x | O | x | x | x | O | O | O | O |
| 429 | Clear signal selection | 1D | 9D | 4 | x | x | x | x | O | x | x | x | O | O | O | O |

***Tab. A-3:*** *Parameter list with instruction codes (12)*

| Pr. | Name | Instruction code ① | | | Control method ② | | | | | | | | | Parameter | | |
|---|---|---|---|---|---|---|---|---|---|---|---|---|---|---|---|---|
| | | Read | Write | Extended | V/F | Magnetic flux | Vector | | | Sensorless | | PM | | Copy ③ | Clear ③ | All clear ③ |
| | | | | | | | Spped control | Torque control | Position control | Spped control | Torque control | Spped control | Position control | | | |
| 430 | Pulse monitor selection | 1E | 9E | 4 | x | x | x | x | O | x | x | x | O | O | O | O |
| 434 | IP address 1 NCE | 22 | A2 | 4 | O | O | O | O | O | O | O | O | O | O | O④ | O④ |
| 435 | IP address 2 NCE | 23 | A3 | 4 | O | O | O | O | O | O | O | O | O | O | O④ | O④ |
| 446 | Model position control gain | 2E | AE | 4 | x | x | x | x | O | x | x | x | O | O | O | O |
| 447 | Digital torque command bias AX | 2F | AF | 4 | x | x | x | O | x | x | O | x | x | O | O | O |
| 448 | Digital torque command gain AX | 30 | B0 | 4 | x | x | x | O | x | x | O | x | x | O | O | O |
| 450 | Second applied motor | 32 | B2 | 4 | O | O | x | x | x | O | O | O | x | O | O | O |
| 451 | Second motor control method selection | 33 | B3 | 4 | O | O | x | x | x | O | O | O | x | O | O | O |
| 453 | Second motor capacity | 35 | B5 | 4 | x | O | x | x | x | O | O | O | x | O | O | O |
| 454 | Number of second motor poles | 36 | B6 | 4 | x | O | x | x | x | O | O | O | x | O | O | O |
| 455 | Second motor excitation current | 37 | B7 | 4 | x | O | x | x | x | O | O | x | x | O | x | O |
| 456 | Rated second motor voltage | 38 | B8 | 4 | x | O | x | x | x | O | O | O | x | O | O | O |
| 457 | Rated second motor frequency | 39 | B9 | 4 | x | O | x | x | x | O | O | O | x | O | O | O |
| 458 | Second motor constant (R1) | 3A | BA | 4 | x | O | x | x | x | O | O | O | x | O | x | O |
| 459 | Second motor constant (R2) | 3B | BB | 4 | x | O | x | x | x | O | O | O | x | O | x | O |
| 460 | Second motor constant (L1)/ d-shaft inductance (Ld) | 3C | BC | 4 | x | O | x | x | x | O | O | O | x | O | x | O |
| 461 | Second motor constant (L2)/ q-shaft inductance (Lq) | 3D | BD | 4 | x | O | x | x | x | O | O | O | x | O | x | O |
| 462 | Second motor constant (X) | 3E | BE | 4 | x | O | x | x | x | O | O | x | x | O | x | O |
| 463 | Second motor auto tuning setting/status | 3F | BF | 4 | x | O | x | x | x | O | O | O | x | O | x | O |
| 464 | Digital position control sudden stop deceleration time | 40 | C0 | 4 | x | x | x | x | O | x | x | x | O | O | O | O |
| 465 | First target position lower 4 digits | 41 | C1 | 4 | x | x | x | x | O | x | x | x | O | O | O | O |
| 466 | First target position upper 4 digits | 42 | C2 | 4 | x | x | x | x | O | x | x | x | O | O | O | O |
| 467 | Second target position lower 4 digits | 43 | C3 | 4 | x | x | x | x | O | x | x | x | O | O | O | O |
| 468 | Second target position upper 4 digits | 44 | C4 | 4 | x | x | x | x | O | x | x | x | O | O | O | O |
| 469 | Third target position lower 4 digits | 45 | C5 | 4 | x | x | x | x | O | x | x | x | O | O | O | O |
| 470 | Third target position upper 4 digits | 46 | C6 | 4 | x | x | x | x | O | x | x | x | O | O | O | O |
| 471 | Fourth target position lower 4 digits | 47 | C7 | 4 | x | x | x | x | O | x | x | x | O | O | O | O |
| 472 | Fourth target position upper 4 digits | 48 | C8 | 4 | x | x | x | x | O | x | x | x | O | O | O | O |

***Tab. A-3:*** *Parameter list with instruction codes (13)*

| Pr. | Name | Instruction code ① | | | Control method ② | | | | | | | | | Parameter | | |
|---|---|---|---|---|---|---|---|---|---|---|---|---|---|---|---|---|
| | | Read | Write | Extended | V/F | Magnetic flux | Vector | | | Sensorless | | PM | | Copy ③ | Clear ③ | All clear ③ |
| | | | | | | | Spped control | Torque control | Position control | Spped control | Torque control | Spped control | Position control | | | |
| 473 | Fifth target position lower 4 digits | 49 | C9 | 4 | x | x | x | x | O | x | x | x | O | O | O | O |
| 474 | Fifth target position upper 4 digits | 4A | CA | 4 | x | x | x | x | O | x | x | x | O | O | O | O |
| 475 | Sixth target position lower 4 digits | 4B | CB | 4 | x | x | x | x | O | x | x | x | O | O | O | O |
| 476 | Sixth target position upper 4 digits | 4C | CC | 4 | x | x | x | x | O | x | x | x | O | O | O | O |
| 477 | Seventh target position lower 4 digits | 4D | CD | 4 | x | x | x | x | O | x | x | x | O | O | O | O |
| 478 | Seventh target position upper 4 digits | 4E | CE | 4 | x | x | x | x | O | x | x | x | O | O | O | O |
| 479 | Eighth target position lower 4 digits | 4F | CF | 4 | x | x | x | x | O | x | x | x | O | O | O | O |
| 480 | Eighth target position upper 4 digits | 50 | D0 | 4 | x | x | x | x | O | x | x | x | O | O | O | O |
| 481 | Ninth target position lower 4 digits | 51 | D1 | 4 | x | x | x | x | O | x | x | x | O | O | O | O |
| 482 | Ninth target position upper 4 digits | 52 | D2 | 4 | x | x | x | x | O | x | x | x | O | O | O | O |
| 483 | Tenth target position lower 4 digits | 53 | D3 | 4 | x | x | x | x | O | x | x | x | O | O | O | O |
| 484 | Tenth target position upper 4 digits | 54 | D4 | 4 | x | x | x | x | O | x | x | x | O | O | O | O |
| 485 | Eleventh target position lower 4 digits | 55 | D5 | 4 | x | x | x | x | O | x | x | x | O | O | O | O |
| 486 | Eleventh target position upper 4 digits | 56 | D6 | 4 | x | x | x | x | O | x | x | x | O | O | O | O |
| 487 | Twelfth target position lower 4 digits | 57 | D7 | 4 | x | x | x | x | O | x | x | x | O | O | O | O |
| 488 | Twelfth target position upper 4 digits | 58 | D8 | 4 | x | x | x | x | O | x | x | x | O | O | O | O |
| 489 | Thirteenth target position lower 4 digits | 59 | D9 | 4 | x | x | x | x | O | x | x | x | O | O | O | O |
| 490 | Thirteenth target position upper 4 digits | 5A | DA | 4 | x | x | x | x | O | x | x | x | O | O | O | O |
| 491 | Fourteenth target position lower 4 digits | 5B | DB | 4 | x | x | x | x | O | x | x | x | O | O | O | O |
| 492 | Fourteenth target position upper 4 digits | 5C | DC | 4 | x | x | x | x | O | x | x | x | O | O | O | O |
| 493 | Fifteenth target position lower 4 digits | 5D | DD | 4 | x | x | x | x | O | x | x | x | O | O | O | O |
| 494 | Fifteenth target position upper 4 digits | 5E | DE | 4 | x | x | x | x | O | x | x | x | O | O | O | O |
| 495 | Remote output selection | 5F | DF | 4 | O | O | O | O | O | O | O | O | O | O | O | O |
| 496 | Remote output data 1 | 60 | E0 | 4 | O | O | O | O | O | O | O | O | O | x | x | x |
| 497 | Remote output data 2 | 61 | E1 | 4 | O | O | O | O | O | O | O | O | O | x | x | x |
| 498 | PLC function flash memory clear | 62 | E2 | 4 | O | O | O | O | O | O | O | x | O | x | x | x |
| 500 | Communication error execution waiting time NC ND | 00 | 80 | 5 | O | O | O | O | O | O | O | O | O | O | O | O |

***Tab. A-3:*** *Parameter list with instruction codes (14)*

| Pr. | Name | Instruction code ① | | | Control method ② | | | | | | | | | Parameter | | |
|---|---|---|---|---|---|---|---|---|---|---|---|---|---|---|---|---|
| | | Read | Write | Extended | V/F | Magnetic flux | Vector | | | Sensorless | | PM | | Copy ③ | Clear ③ | All clear ③ |
| | | | | | | | Spped control | Torque control | Position control | Spped control | Torque control | Spped control | Position control | | | |
| 501 | Communication error occurrence count display NC ND | 01 | 81 | 5 | O | O | O | O | O | O | O | O | O | x | O | O |
| 502 | Stop mode selection at communication error NC ND | 02 | 82 | 5 | O | O | O | O | O | O | O | O | O | O | O | O |
| 503 | Maintenance timer 1 | 03 | 83 | 5 | O | O | O | O | O | O | O | O | O | x | x | x |
| 504 | Maintenance timer 1 warning output set time | 04 | 84 | 5 | O | O | O | O | O | O | O | O | O | O | x | O |
| 505 | Speed setting reference | 05 | 85 | 5 | O | O | O | O | O | O | O | O | O | O | O | O |
| 516 | S-pattern time at a start of acceleration | 10 | 90 | 5 | O | O | O | O | O | O | O | O | x | O | O | O |
| 517 | S-pattern time at a completion of acceleration | 11 | 91 | 5 | O | O | O | O | x | O | O | O | x | O | O | O |
| 518 | S-pattern time at a start of deceleration | 12 | 92 | 5 | O | O | O | O | x | O | O | O | x | O | O | O |
| 519 | S-pattern time at a completion of deceleration | 13 | 93 | 5 | O | O | O | O | x | O | O | O | x | O | O | O |
| 522 | Output stop frequency | 16 | 96 | 5 | O | O | O | O | O | O | O | O | O | O | O | O |
| 539 | Modbus-RTU communication check time interval | 27 | A7 | 5 | O | O | O | O | O | O | O | O | O | O | O④ | O④ |
| 541 | Frequency command sign selection NC NCE | 29 | A9 | 5 | O | O | O | x | x | O | x | O | x | O | O④ | O④ |
| 542 | Communication station number (CC-Link) NC | 2A | AA | 5 | O | O | O | O | O | O | O | O | O | O | O④ | O④ |
| 543 | Baud rate selection (CC-Link) NC | 2B | AB | 5 | O | O | O | O | O | O | O | O | O | O | O④ | O④ |
| 544 | CC-Link extended setting NC | 2C | AC | 5 | O | O | O | O | O | O | O | O | O | O | O④ | O④ |
| 547 | USB communication station number | 2F | AF | 5 | O | O | O | O | O | O | O | O | O | O | O④ | O④ |
| 548 | USB communication check time interval | 30 | B0 | 5 | O | O | O | O | O | O | O | O | O | O | O④ | O④ |
| 549 | Protocol selection | 31 | B1 | 5 | O | O | O | O | O | O | O | O | O | O | O④ | O④ |
| 550 | NET mode operation command source selection | 32 | B2 | 5 | O | O | O | O | O | O | O | O | O | O | O④ | O④ |
| 551 | PU mode operation command source selection | 33 | B3 | 5 | O | O | O | O | O | O | O | O | O | O | O④ | O④ |
| 552 | Frequency jump range | 34 | B4 | 5 | O | O | O | O | x | O | O | O | x | O | O | O |
| 553 | PID deviation limit | 35 | B5 | 5 | O | O | O | x | x | O | x | O | x | O | O | O |
| 554 | PID signal operation selection | 36 | B6 | 5 | O | O | O | x | x | O | x | O | x | O | O | O |
| 555 | Current average time | 37 | B7 | 5 | O | O | O | O | O | O | O | O | O | O | O | O |
| 556 | Data output mask time | 38 | B8 | 5 | O | O | O | O | O | O | O | O | O | O | O | O |
| 557 | Current average value monitor signal output reference current | 39 | B9 | 5 | O | O | O | O | O | O | O | O | O | O | O | O |
| 560 | Second frequency search gain | 3C | BC | 5 | O | O | x | x | x | O | O | x | x | O | x | O |
| 561 | PTC thermistor protection level | 3D | BD | 5 | O | O | O | O | O | O | O | O | O | O | x | O |

***Tab. A-3:*** *Parameter list with instruction codes (15)*

| Pr. | Name | Instruction code ① | | | Control method ② | | | | | | | | | Parameter | | |
|---|---|---|---|---|---|---|---|---|---|---|---|---|---|---|---|---|
| | | Read | Write | Extended | V/F | Magnetic flux | Vector | | | Sensorless | | PM | | Copy ③ | Clear ③ | All clear ③ |
| | | | | | | | Spped control | Torque control | Position control | Spped control | Torque control | Spped control | Position control | | | |
| 563 | Energization time carrying-over times | 3F | BF | 5 | O | O | O | O | O | O | O | O | O | x | x | x |
| 564 | Operating time carrying-over times | 40 | C0 | 5 | O | O | O | O | O | O | O | O | O | x | x | x |
| 569 | Second motor speed control gain | 45 | C5 | 5 | x | O | x | x | x | x | x | x | x | O | x | O |
| 570 | Multiple rating setting | 46 | C6 | 5 | O | O | O | O | O | O | O | O | O | O | x | x |
| 571 | Holding time at a start | 47 | C7 | 5 | O | O | O | O | x | O | O | x | x | O | O | O |
| 573 | 4 mA input check selection | 49 | C9 | 5 | O | O | O | O | x | O | O | x | x | O | O | O |
| 574 | Second motor online auto tuning | 4A | CA | 5 | x | O | x | x | x | O | O | x | x | O | O | O |
| 575 | Output interruption detection time | 4B | CB | 5 | O | O | O | x | x | O | x | O | x | O | O | O |
| 576 | Output interruption detection level | 4C | CC | 5 | O | O | O | x | x | O | x | O | x | O | O | O |
| 577 | Output interruption cancel level | 4D | CD | 5 | O | O | O | x | x | O | x | O | x | O | O | O |
| 592 | Traverse function selection | 5C | DC | 5 | O | O | O | x | x | O | x | x | x | O | O | O |
| 593 | Maximum amplitude amount | 5D | DD | 5 | O | O | O | x | x | O | x | x | x | O | O | O |
| 594 | Amplitude compensation amount during deceleration | 5E | DE | 5 | O | O | O | x | x | O | x | x | x | O | O | O |
| 595 | Amplitude compensation amount during acceleration | 5F | DF | 5 | O | O | O | x | x | O | x | x | x | O | O | O |
| 596 | Amplitude acceleration time | 60 | E0 | 5 | O | O | O | x | x | O | x | x | x | O | O | O |
| 597 | Amplitude deceleration time | 61 | E1 | 5 | O | O | O | x | x | O | x | x | x | O | O | O |
| 598 | Undervoltage level | 62 | E2 | 5 | O | O | O | O | O | O | O | x | O | O | O | O |
| 599 | X10 terminal input selection | 63 | E3 | 5 | O | O | O | O | O | O | O | O | O | O | O | O |
| 600 | First free thermal reduction frequency 1 | 00 | 80 | 6 | O | O | O | O | O | O | O | O | O | O | O | O |
| 601 | First free thermal reduction ratio 1 | 01 | 81 | 6 | O | O | O | O | O | O | O | O | O | O | O | O |
| 602 | First free thermal reduction frequency 2 | 02 | 82 | 6 | O | O | O | O | O | O | O | O | O | O | O | O |
| 603 | First free thermal reduction ratio 2 | 03 | 83 | 6 | O | O | O | O | O | O | O | O | O | O | O | O |
| 604 | First free thermal reduction frequency 3 | 04 | 84 | 6 | O | O | O | O | O | O | O | O | O | O | O | O |
| 607 | Motor permissible load level | 07 | 87 | 6 | O | O | O | O | O | O | O | O | O | O | O | O |
| 608 | Second motor permissible load level | 08 | 88 | 6 | O | O | O | O | O | O | O | O | O | O | O | O |
| 609 | PID set point/deviation input selection | 09 | 89 | 6 | O | O | O | x | x | O | x | O | x | O | O | O |
| 610 | PID measured value input selection | 0A | 8A | 6 | O | O | O | x | x | O | x | O | x | O | O | O |
| 611 | Acceleration time at a restart | 0B | 8B | 6 | O | O | O | x | x | O | x | O | x | O | O | O |

***Tab. A-3:*** *Parameter list with instruction codes (16)*

| Pr. | Name | Instruction code ① | | | Control method ② | | | | | | | | | Parameter | | |
|---|---|---|---|---|---|---|---|---|---|---|---|---|---|---|---|---|
| | | Read | Write | Extended | V/F | Magnetic flux | Vector | | | Sensorless | | PM | | Copy ③ | Clear ③ | All clear ③ |
| | | | | | | | Spped control | Torque control | Position control | Spped control | Torque control | Spped control | Position control | | | |
| 639 | Brake opening current selection | 27 | A7 | 6 | x | O | O | x | x | O | x | O | x | O | O | O |
| 640 | Brake operation frequency selection | 28 | A8 | 6 | x | x | O | x | x | O | x | O | x | O | O | O |
| 641 | Second brake sequence operation selection | 29 | A9 | 6 | x | O | O | x | x | O | x | O | x | O | O | O |
| 642 | Second brake opening frequency | 2A | AA | 6 | x | O | O | x | x | O | x | O | x | O | O | O |
| 643 | Second brake opening current | 2B | AB | 6 | x | O | O | x | x | O | x | O | x | O | O | O |
| 644 | Second brake opening current detection time | 2C | AC | 6 | x | O | O | x | x | O | x | O | x | O | O | O |
| 645 | Second brake operation time at start | 2D | AD | 6 | x | O | O | x | x | O | x | O | x | O | O | O |
| 646 | Second brake operation frequency | 2E | AE | 6 | x | O | O | x | x | O | x | O | x | O | O | O |
| 647 | Second brake operation time at stop | 2F | AF | 6 | x | O | O | x | x | O | x | O | x | O | O | O |
| 648 | Second deceleration detection function selection | 30 | B0 | 6 | x | O | O | x | x | O | x | O | x | O | O | O |
| 650 | Second brake opening current selection | 32 | B2 | 6 | x | O | O | x | x | O | x | O | x | O | O | O |
| 651 | Second brake operation frequency selection | 33 | B3 | 6 | x | x | O | x | x | O | x | O | x | O | O | O |
| 653 | Speed smoothing control | 35 | B5 | 6 | O | O | x | x | x | x | x | x | x | O | O | O |
| 654 | Speed smoothing cutoff frequency | 36 | B6 | 6 | O | O | x | x | x | x | x | x | x | O | O | O |
| 655 | Analog remote output selection | 37 | B7 | 6 | O | O | O | O | O | O | O | O | O | O | O | O |
| 656 | Analog remote output 1 | 38 | B8 | 6 | O | O | O | O | O | O | O | O | O | x | x | x |
| 657 | Analog remote output 2 | 39 | B9 | 6 | O | O | O | O | O | O | O | O | O | x | x | x |
| 658 | Analog remote output 3 | 3A | BA | 6 | O | O | O | O | O | O | O | O | O | x | x | x |
| 659 | Analog remote output 4 | 3B | BB | 6 | O | O | O | O | O | O | O | O | O | x | x | x |
| 660 | Increased magnetic excitation deceleration operation selection | 3C | BC | 6 | O | O | O | x | x | O | x | x | x | O | O | O |
| 661 | Magnetic excitation increase rate | 3D | BD | 6 | O | O | O | x | x | O | x | x | x | O | O | O |
| 662 | Increased magnetic excitation current level | 3E | BE | 6 | O | O | x | x | x | x | x | x | x | O | O | O |
| 663 | Control circuit temperature signal output level | 3F | BF | 6 | O | O | O | O | O | O | O | O | O | O | O | O |
| 665 | Regeneration avoidance frequency gain | 41 | C1 | 6 | O | O | O | x | x | O | x | O | x | O | O | O |
| 668 | Power failure stop frequency gain | 44 | C4 | 6 | O | O | O | O | O | O | O | O | O | O | O | O |
| 684 | Tuning data unit switchover | 54 | D4 | 6 | x | O | O | O | O | O | O | x | O | O | O | O |
| 686 | Maintenance timer 2 | 56 | D6 | 6 | O | O | O | O | O | O | O | O | O | x | x | x |

***Tab. A-3:*** *Parameter list with instruction codes (17)*

| Pr. | Name | Instruction code ① | | | Control method ② | | | | | | | | | Parameter | | |
|---|---|---|---|---|---|---|---|---|---|---|---|---|---|---|---|---|
| | | Read | Write | Extended | V/F | Magnetic flux | Vector Spped control | Vector Torque control | Vector Position control | Sensorless Spped control | Sensorless Torque control | PM Spped control | PM Position control | Copy ③ | Clear ③ | All clear ③ |
| 687 | Maintenance timer 2 warning output set time | 57 | D7 | 6 | O | O | O | O | O | O | O | O | O | O | x | O |
| 688 | Maintenance timer 3 | 58 | D8 | 6 | O | O | O | O | O | O | O | O | O | x | x | x |
| 689 | Maintenance timer 3 warning output set time | 59 | D9 | 6 | O | O | O | O | O | O | O | O | O | O | x | O |
| 690 | Deceleration check time | 5A | DA | 6 | x | x | O | O | O | x | x | x | O | O | O | O |
| 692 | Second free thermal reduction frequency 1 | 5C | DC | 6 | O | O | O | O | O | O | O | O | O | O | O | O |
| 693 | Second free thermal reduction ratio 1 | 5D | DD | 6 | O | O | O | O | O | O | O | O | O | O | O | O |
| 694 | Second free thermal reduction frequency 2 | 5E | DE | 6 | O | O | O | O | O | O | O | O | O | O | O | O |
| 695 | Second free thermal reduction ratio 2 | 5F | DF | 6 | O | O | O | O | O | O | O | O | O | O | O | O |
| 696 | Second free thermal reduction frequency 3 | 60 | E0 | 6 | O | O | O | O | O | O | O | O | O | O | O | O |
| 699 | Input terminal filter | 63 | E3 | 6 | O | O | O | O | O | O | O | O | O | O | x | O |
| 702 | Maximum motor frequency | 02 | 82 | 7 | x | x | x | x | x | x | x | O | x | O | O | O |
| 706 | Induced voltage constant (phi f) | 06 | 86 | 7 | x | x | x | x | x | x | x | O | x | O | x | O |
| 707 | Motor inertia (integer) | 07 | 87 | 7 | x | x | x | x | x | x | x | O | x | O | O | O |
| 711 | Motor Ld decay ratio | 0B | 8B | 7 | x | x | x | x | x | x | x | O | x | O | x | O |
| 712 | Motor Lq decay ratio | 0C | 8C | 7 | x | x | x | x | x | x | x | O | x | O | x | O |
| 717 | Starting resistance tuning compensation | 11 | 91 | 7 | x | x | x | x | x | x | x | O | x | O | x | O |
| 721 | Starting magnetic pole position detection pulse width | 15 | 95 | 7 | x | x | x | x | x | x | x | O | x | O | x | O |
| 724 | Motor inertia (exponent) | 18 | 98 | 7 | x | x | x | x | x | x | x | O | x | O | O | O |
| 725 | Motor protection current level | 19 | 99 | 7 | x | x | x | x | x | x | x | O | x | O | O | O |
| 738 | Second motor induced voltage constant (phi f) | 26 | A6 | 7 | x | x | x | x | x | x | x | O | x | O | x | O |
| 739 | Second motor Ld decay ratio | 27 | A7 | 7 | x | x | x | x | x | x | x | O | x | O | x | O |
| 740 | Second motor Lq decay ratio | 28 | A8 | 7 | x | x | x | x | x | x | x | O | x | O | x | O |
| 741 | Second starting resistance tuning compensation | 29 | A9 | 7 | x | x | x | x | x | x | x | O | x | O | x | O |
| 742 | Second motor magnetic pole detection pulse width | 2A | AA | 7 | x | x | x | x | x | x | x | O | x | O | x | O |

***Tab. A-3:*** *Parameter list with instruction codes (18)*

| Pr. | Name | Instruction code ① | | | Control method ② | | | | | | | | | Parameter | | |
|---|---|---|---|---|---|---|---|---|---|---|---|---|---|---|---|---|
| | | Read | Write | Extended | V/F | Magnetic flux | Vector | | | Sensorless | | PM | | Copy ③ | Clear ③ | All clear ③ |
| | | | | | | | Spped control | Torque control | Position control | Spped control | Torque control | Spped control | Position control | | | |
| 743 | Second motor maximum frequency | 2B | AB | 7 | x | x | x | x | x | x | x | O | x | O | O | O |
| 744 | Second motor inertia (integer) | 2C | AC | 7 | x | x | x | x | x | x | x | O | x | O | O | O |
| 745 | Second motor inertia (exponent) | 2D | AD | 7 | x | x | x | x | x | x | x | O | x | O | O | O |
| 746 | Second motor protection current level | 2E | AE | 7 | x | x | x | x | x | x | x | O | x | O | O | O |
| 747 | Second motor low-speed range torque characteristic selection | 2F | AF | 7 | x | x | x | x | x | x | x | O | x | O | O | O |
| 753 | Second PID action selection | 35 | B5 | 7 | O | O | O | x | x | O | x | O | x | O | O | O |
| 754 | Second PID control automatic switchover frequency | 36 | B6 | 7 | O | O | O | x | x | O | x | O | x | O | O | O |
| 755 | Second PID action set point | 37 | B7 | 7 | O | O | O | x | x | O | x | O | x | O | O | O |
| 756 | Second PID proportional band | 38 | B8 | 7 | O | O | O | x | x | O | x | O | x | O | O | O |
| 757 | Second PID integral time | 39 | B9 | 7 | O | O | O | x | x | O | x | O | x | O | O | O |
| 758 | Second PID differential time | 3A | BA | 7 | O | O | O | x | x | O | x | O | x | O | O | O |
| 759 | PID unit selection | 3B | BB | 7 | O | O | O | x | x | O | x | O | x | O | O | O |
| 760 | Pre-charge fault selection | 3C | BC | 7 | O | O | O | x | x | O | x | O | x | O | O | O |
| 761 | Pre-charge ending level | 3D | BD | 7 | O | O | O | x | x | O | x | O | x | O | O | O |
| 762 | Pre-charge ending time | 3E | BE | 7 | O | O | O | x | x | O | x | O | x | O | O | O |
| 763 | Pre-charge upper detection level | 3F | BF | 7 | O | O | O | x | x | O | x | O | x | O | O | O |
| 764 | Pre-charge time limit | 40 | C0 | 7 | O | O | O | x | x | O | x | O | x | O | O | O |
| 765 | Second pre-charge fault selection | 41 | C1 | 7 | O | O | O | x | x | O | x | O | x | O | O | O |
| 766 | Second pre-charge ending level | 42 | C2 | 7 | O | O | O | x | x | O | x | O | x | O | O | O |
| 767 | Second pre-charge ending time | 43 | C3 | 7 | O | O | O | x | x | O | x | O | x | O | O | O |
| 768 | Second pre-charge upper detection level | 44 | C4 | 7 | O | O | O | x | x | O | x | O | x | O | O | O |
| 769 | Second pre-charge time limit | 45 | C5 | 7 | O | O | O | x | x | O | x | O | x | O | O | O |
| 774 | Operation panel monitor selection 1 | 4A | CA | 7 | O | O | O | O | O | O | O | O | O | O | O | O |
| 775 | Operation panel monitor selection 2 | 4B | CB | 7 | O | O | O | O | O | O | O | O | O | O | O | O |
| 776 | Operation panel monitor selection 3 | 4C | CC | 7 | O | O | O | O | O | O | O | O | O | O | O | O |
| 777 | 4 mA input fault operation frequency | 4D | CD | 7 | O | O | O | O | O | O | O | O | O | O | O | O |
| 778 | 4 mA input check filter | 4E | CE | 7 | O | O | O | O | O | O | O | O | O | O | O | O |
| 779 | Operation frequency during communication error | 4F | CF | 7 | O | O | O | O | O | O | O | O | O | O | O | O |

***Tab. A-3:*** *Parameter list with instruction codes (19)*

| Pr. | Name | Instruction code ① | | | Control method ② | | | | | | | | | Parameter | | |
|---|---|---|---|---|---|---|---|---|---|---|---|---|---|---|---|---|
| | | Read | Write | Extended | V/F | Magnetic flux | Vector Spped control | Vector Torque control | Vector Position control | Sensorless Spped control | Sensorless Torque control | PM Spped control | PM Position control | Copy ③ | Clear ③ | All clear ③ |
| 788 | Low speed range torque characteristic selection | 58 | D8 | 7 | x | x | x | x | x | x | x | O | x | O | O | O |
| 791 | Acceleration time in low-speed range | 5B | DB | 7 | x | x | x | x | x | x | x | O | x | O | O | O |
| 792 | Deceleration time in low-speed range | 5C | DC | 7 | x | x | x | x | x | x | x | O | x | O | O | O |
| 799 | Pulse increment setting for output power | 63 | E3 | 7 | O | O | O | O | O | O | O | O | O | O | O | O |
| 800 | Control method selection | 00 | 80 | 8 | O | O | O | O | O | O | O | x | O | O | O | O |
| 802 | Pre-excitation selection | 02 | 82 | 8 | x | x | O | x | x | x | x | x | x | O | O | O |
| 803 | Constant output range torque characteristic selection | 03 | 83 | 8 | x | x | O | O | O | O | O | x | O | O | O | O |
| 804 | Torque command source selection | 04 | 84 | 8 | x | x | x | O | x | x | O | x | x | O | O | O |
| 805 | Torque command value (RAM) | 05 | 85 | 8 | x | x | x | O | x | x | O | x | x | x | O | O |
| 806 | Torque command value (RAM,EEPROM) | 06 | 86 | 8 | x | x | x | O | x | x | O | x | x | O | O | O |
| 807 | Speed limit selection | 07 | 87 | 8 | x | x | x | O | x | x | O | x | x | O | O | O |
| 808 | Forward rotation speed limit/ speed limit | 08 | 88 | 8 | x | x | x | O | x | x | O | x | x | O | O | O |
| 809 | Reverse rotation speed limit/ reverse-side speed limit | 09 | 89 | 8 | x | x | x | O | x | x | O | x | x | O | O | O |
| 810 | Torque limit input method selection | 0A | 8A | 8 | x | x | O | x | O | O | x | x | O | O | O | O |
| 811 | Set resolution switchover | 0B | 8B | 8 | O | O | O | O | O | O | O | x | O | O | O | O |
| 812 | Torque limit level (regeneration) | 0C | 8C | 8 | x | x | O | x | O | O | x | x | O | O | O | O |
| 813 | Torque limit level (3rd quadrant) | 0D | 8D | 8 | x | x | O | x | O | O | x | x | O | O | O | O |
| 814 | Torque limit level (4th quadrant) | 0E | 8E | 8 | x | x | O | x | O | O | x | x | O | O | O | O |
| 815 | Torque limit level 2 | 0F | 8F | 8 | x | x | O | x | O | O | x | x | O | O | O | O |
| 816 | Torque limit level during acceleration | 10 | 90 | 8 | x | x | O | x | O | O | x | x | O | O | O | O |
| 817 | Torque limit level during deceleration | 11 | 91 | 8 | x | x | O | x | O | O | x | x | O | O | O | O |
| 818 | Easy gain tuning response level setting | 12 | 92 | 8 | x | x | O | x | O | O | x | x | O | O | O | O |
| 819 | Easy gain tuning selection | 13 | 93 | 8 | x | x | O | x | O | O | x | x | O | O | x | O |
| 820 | Speed control P gain 1 | 14 | 94 | 8 | x | x | O | x | O | O | x | O | O | O | O | O |
| 821 | Speed control integral time 1 | 15 | 95 | 8 | x | x | O | x | O | O | x | O | O | O | O | O |
| 822 | Speed setting filter 1 | 16 | 96 | 8 | x | x | O | O | x | O | O | O | x | O | O | O |
| 823 | Speed detection filter 1 AP | 17 | 97 | 8 | x | x | O | O | O | x | x | x | O | O | O | O |
| 824 | Torque control P gain 1 (current loop proportional gain) | 18 | 98 | 8 | x | x | O | O | O | O | O | O | O | O | O | O |
| 825 | Torque control integral time 1 (current loop integral time) | 19 | 99 | 8 | x | x | O | O | O | O | O | O | O | O | O | O |

***Tab. A-3:*** *Parameter list with instruction codes (20)*

| Pr. | Name | Instruction code ① | | | Control method ② | | | | | | | | | Parameter | | |
|---|---|---|---|---|---|---|---|---|---|---|---|---|---|---|---|---|
| | | Read | Write | Extended | V/F | Magnetic flux | Vector | | | Sensorless | | PM | | Copy ③ | Clear ③ | All clear ③ |
| | | | | | | | Spped control | Torque control | Position control | Spped control | Torque control | Spped control | Position control | | | |
| 826 | Torque setting filter 1 | 1A | 9A | 8 | x | x | O | O | O | O | O | x | O | O | O | O |
| 827 | Torque detection filter 1 | 1B | 9B | 8 | x | x | O | O | O | O | O | O | O | O | O | O |
| 828 | Model speed control gain | 1C | 9C | 8 | x | x | O | x | O | O | x | O | O | O | O | O |
| 830 | Speed control P gain 2 | 1E | 9E | 8 | x | x | O | x | O | O | x | O | O | O | O | O |
| 831 | Speed control integral time 2 | 1F | 9F | 8 | x | x | O | x | O | O | x | O | O | O | O | O |
| 832 | Speed setting filter 2 | 20 | A0 | 8 | x | x | O | O | x | O | O | O | x | O | O | O |
| 833 | Speed detection filter 2 AP | 21 | A1 | 8 | x | x | O | x | O | x | x | x | O | O | O | O |
| 834 | Torque control P gain 2 | 22 | A2 | 8 | x | x | O | O | O | O | O | O | O | O | O | O |
| 835 | Torque control integral time 2 | 23 | A3 | 8 | x | x | O | O | O | O | O | O | O | O | O | O |
| 836 | Torque setting filter 2 | 24 | A4 | 8 | x | x | O | O | O | O | O | x | O | O | O | O |
| 837 | Torque detection filter 2 | 25 | A5 | 8 | x | x | O | O | O | O | O | O | O | O | O | O |
| 840 | Torque bias selection AP | 28 | A8 | 8 | x | x | O | x | x | x | x | x | x | O | O | O |
| 841 | Torque bias 1 AP | 29 | A9 | 8 | x | x | O | x | x | x | x | x | x | O | O | O |
| 842 | Torque bias 2 AP | 2A | AA | 8 | x | x | O | x | x | x | x | x | x | O | O | O |
| 843 | Torque bias 3 AP | 2B | AB | 8 | x | x | O | x | x | x | x | x | x | O | O | O |
| 844 | Torque bias filter AP | 2C | AC | 8 | x | x | O | x | x | x | x | x | x | O | O | O |
| 845 | Torque bias operation time AP | 2D | AD | 8 | x | x | O | x | x | x | x | x | x | O | O | O |
| 846 | Torque bias balance compensation AP | 2E | AE | 8 | x | x | O | x | x | x | x | x | x | O | O | O |
| 847 | Fall-time torque bias terminal 1 bias AP | 2F | AF | 8 | x | x | O | x | x | x | x | x | x | O | O | O |
| 848 | Fall-time torque bias terminal 1 gain AP | 30 | B0 | 8 | x | x | O | x | x | x | x | x | x | O | O | O |
| 849 | Analog input offset adjustment | 31 | B1 | 8 | O | O | O | O | O | O | O | O | O | O | O | O |
| 850 | Brake operation selection | 32 | B2 | 8 | x | x | x | x | x | O | O | x | x | O | O | O |
| 853 | Speed deviation time | 35 | B5 | 8 | x | x | O | x | x | x | x | x | x | O | O | O |
| 854 | Excitation ratio | 36 | B6 | 8 | x | x | O | O | O | O | O | x | O | O | O | O |
| 858 | Terminal 4 function assignment | 3A | BA | 8 | O | O | O | O | O | O | O | x | O | O | x | O |
| 859 | Torque current/Rated PM motor current | 3B | BB | 8 | x | O | O | O | O | O | O | O | O | O | x | O |

***Tab. A-3:*** *Parameter list with instruction codes (21)*

| Pr. | Name | Instruction code ① | | | Control method ② | | | | | | | | | Parameter | | |
|---|---|---|---|---|---|---|---|---|---|---|---|---|---|---|---|---|
| | | Read | Write | Extended | V/F | Magnetic flux | Vector Spped control | Vector Torque control | Vector Position control | Sensorless Spped control | Sensorless Torque control | PM Spped control | PM Position control | Copy ③ | Clear ③ | All clear ③ |
| 860 | Second motor torque current/ Rated PM motor current | 3C | BC | 8 | x | O | x | x | x | O | O | O | x | O | x | O |
| 864 | Torque detection | 40 | C0 | 8 | x | x | O | O | O | O | O | x | O | O | O | O |
| 865 | Low speed detection | 41 | C1 | 8 | x | x | O | O | O | O | O | x | O | O | O | O |
| 866 | Torque monitoring reference | 42 | C2 | 8 | x | O | O | O | O | O | O | x | O | O | O | O |
| 867 | AM output filter | 43 | C3 | 8 | O | O | O | O | O | O | O | O | O | O | O | O |
| 868 | Terminal 1 function assignment | 44 | C4 | 8 | O | O | O | O | O | O | O | x | O | O | x | O |
| 869 | Current output filter | 45 | C5 | 8 | O | O | O | O | O | O | O | O | O | O | O | O |
| 870 | Speed detection hysteresis | 46 | C6 | 8 | O | O | O | O | O | O | O | O | O | O | O | O |
| 872 | Input phase loss protection selection | 48 | C8 | 8 | O | O | O | O | O | O | O | O | O | O | O | O |
| 873 | Speed limit AP | 49 | C9 | 8 | x | x | O | x | x | x | x | x | x | O | O | O |
| 874 | OLT level setting | 4A | CA | 8 | x | x | O | x | O | O | x | O | O | O | O | O |
| 875 | Fault definition | 4B | CB | 8 | O | O | O | O | x | O | O | O | x | O | O | O |
| 877 | Speed feed forward control/ model adaptive speed control selection | 4D | CD | 8 | x | x | O | x | O | O | x | x | O | O | O | O |
| 878 | Speed feed forward filter | 4E | CE | 8 | x | x | O | x | O | O | x | x | O | O | O | O |
| 879 | Speed feed forward torque limit | 4F | CF | 8 | x | x | O | x | O | O | x | x | O | O | O | O |
| 880 | Load inertia ratio | 50 | D0 | 8 | x | x | O | x | O | O | x | x | O | O | x | O |
| 881 | Speed feed forward gain | 51 | D1 | 8 | x | x | O | x | O | O | x | x | O | O | O | O |
| 882 | Regeneration avoidance operation selection | 52 | D2 | 8 | O | O | O | x | x | O | x | O | x | O | O | O |
| 883 | Regeneration avoidance operation level | 53 | D3 | 8 | O | O | O | x | x | O | x | O | x | O | O | O |
| 884 | Regeneration avoidance at deceleration detection sensitivity | 54 | D4 | 8 | O | O | O | x | x | O | x | O | x | O | O | O |
| 885 | Regeneration avoidance compensation frequency limit value | 55 | D5 | 8 | O | O | O | x | x | O | x | O | x | O | O | O |
| 886 | Regeneration avoidance voltage gain | 56 | D6 | 8 | O | O | O | x | x | O | x | O | x | O | O | O |
| 888 | Free parameter 1 | 58 | D8 | 8 | O | O | O | O | O | O | O | O | O | O | x | x |
| 889 | Free parameter 2 | 59 | D9 | 8 | O | O | O | O | O | O | O | O | O | O | x | x |
| 891 | Cumulative power monitor digit shifted times | 5B | DB | 8 | O | O | O | O | O | O | O | O | O | O | O | O |
| 892 | Load factor | 5C | DC | 8 | O | O | O | O | O | O | O | O | O | O | O | O |
| 893 | Energy saving monitor reference (motor capacity) | 5D | DD | 8 | O | O | O | O | O | O | O | O | O | O | O | O |
| 894 | Control selection during commercial power-supply operation | 5E | DE | 8 | O | O | O | O | O | O | O | O | O | O | O | O |
| 895 | Power saving rate reference value | 5F | DF | 8 | O | O | O | O | O | O | O | O | O | O | O | O |
| 896 | Power unit cost | 60 | E0 | 8 | O | O | O | O | O | O | O | O | O | O | O | O |
| 897 | Power saving monitor average time | 61 | E1 | 8 | O | O | O | O | O | O | O | O | O | O | O | O |

***Tab. A-3:*** *Parameter list with instruction codes (22)*

| Pr. | Name | Instruction code ① | | | Control method ② | | | | | | | | | Parameter | | |
|---|---|---|---|---|---|---|---|---|---|---|---|---|---|---|---|---|
| | | Read | Write | Extended | V/F | Magnetic flux | Vector | | | Sensorless | | PM | | Copy ③ | Clear ③ | All clear ③ |
| | | | | | | | Spped control | Torque control | Position control | Spped control | Torque control | Spped control | Position control | | | |
| 898 | Power saving cumulative monitor clear | 62 | E2 | 8 | O | O | O | O | O | O | O | O | O | O | x | O |
| 899 | Operation time rate (estimated value) | 63 | E3 | 8 | O | O | O | O | O | O | O | O | O | O | O | O |
| C0 (900) | FM/CA terminal calibration | 5C | DC | 1 | O | O | O | O | O | O | O | O | O | O | x | O |
| C1 (901) | AM terminal calibration | 5D | DD | 1 | O | O | O | O | O | O | O | O | O | O | x | O |
| C2 (902) | Terminal 2 frequency setting bias frequency | 5E | DE | 1 | O | O | O | O | O | O | O | O | O | O | x | O |
| C3 (902) | Terminal 2 frequency setting bias | 5E | DE | 1 | O | O | O | O | O | O | O | O | O | O | x | O |
| 125 (903) | Terminal 2 frequency setting gain frequency | 5F | DF | 1 | O | O | O | O | O | O | O | O | O | O | x | O |
| C4 (903) | Terminal 2 frequency setting gain | 5F | DF | 1 | O | O | O | O | O | O | O | O | O | O | x | O |
| C5 (904) | Terminal 4 frequency setting bias frequency | 60 | E0 | 1 | O | O | O | O | O | O | O | O | O | O | x | O |
| C6 (904) | Terminal 4 frequency setting bias | 60 | E0 | 1 | O | O | O | O | O | O | O | O | O | O | x | O |
| 126 (905) | Terminal 4 frequency setting gain frequency | 61 | E1 | 1 | O | O | O | O | O | O | O | O | O | O | x | O |
| C7 (905) | Terminal 4 frequency setting gain | 61 | E1 | 1 | O | O | O | O | O | O | O | O | O | O | x | O |
| C12 (917) | Terminal 1 bias frequency (speed) | 11 | 91 | 9 | x | x | O | O | O | O | O | x | O | O | x | O |
| C13 (917) | Terminal 1 bias (speed) | 11 | 91 | 9 | x | x | O | O | O | O | O | x | O | O | x | O |
| C14 (918) | Terminal 1 gain frequency (speed) | 12 | 92 | 9 | x | x | O | O | O | O | O | x | O | O | x | O |
| C15 (918) | Terminal 1 gain (speed) | 12 | 92 | 9 | x | x | O | O | O | O | O | x | O | O | x | O |
| C16 (919) | Terminal 1 bias command (torque/magnetic flux) | 13 | 93 | 9 | x | x | O | O | O | O | O | x | O | O | x | O |
| C17 (919) | Terminal 1 bias (torque/magnetic flux) | 13 | 93 | 9 | x | x | O | O | O | O | O | x | O | O | x | O |
| C18 (920) | Terminal 1 gain command (torque/magnetic flux) | 14 | 94 | 9 | x | x | O | O | O | O | O | x | O | O | x | O |

***Tab. A-3:*** *Parameter list with instruction codes (23)*

| Pr. | Name | Instruction code ① | | | Control method ② | | | | | | | | | Parameter | | |
|---|---|---|---|---|---|---|---|---|---|---|---|---|---|---|---|---|
| | | Read | Write | Extended | V/F | Magnetic flux | Vector | | | Sensorless | | PM | | Copy ③ | Clear ③ | All clear ③ |
| | | | | | | | Spped control | Torque control | Position control | Spped control | Torque control | Spped control | Position control | | | |
| C19 (920) | Terminal 1 gain (torque/magnetic flux) | 14 | 94 | 9 | x | x | O | O | O | O | O | x | O | O | x | O |
| C8 (930) | Current output bias signal | 1E | 9E | 9 | O | O | O | O | O | O | O | O | O | O | O | O |
| C9 (930) | Current output bias current | 1E | 9E | 9 | O | O | O | O | O | O | O | O | O | O | O | O |
| C10 (931) | Current output gain signal | 1F | 9F | 9 | O | O | O | O | O | O | O | O | O | O | O | O |
| C11 (931) | Current output gain current | 1F | 9F | 9 | O | O | O | O | O | O | O | O | O | O | O | O |
| C38 (932) | Terminal 4 bias command (torque/magnetic flux) | 20 | A0 | 9 | x | x | O | O | O | O | O | x | O | O | x | O |
| C39 (932) | Terminal 4 bias (torque/magnetic flux) | 20 | A0 | 9 | x | x | O | O | O | O | O | x | O | O | x | O |
| C40 (933) | Terminal 4 gain command (torque/magnetic flux) | 21 | A1 | 9 | x | x | O | O | O | O | O | x | O | O | x | O |
| C41 (933) | Terminal 4 gain (torque/magnetic flux) | 21 | A1 | 9 | x | x | O | O | O | O | O | x | O | O | x | O |
| C42 (934) | PID display bias coefficient | 22 | A2 | 9 | O | O | O | x | x | O | x | O | x | O | x | O |
| C43 (934) | PID display bias analog value | 22 | A2 | 9 | O | O | O | x | x | O | x | O | x | O | x | O |
| C44 (935) | PID display gain coefficient | 23 | A3 | 9 | O | O | O | x | x | O | x | O | x | O | x | O |
| C45 (935) | PID display gain analog value | 23 | A3 | 9 | O | O | O | x | x | O | x | O | x | O | x | O |
| 977 | Input voltage mode selection | 4D | CD | 9 | O | O | O | O | O | O | O | O | O | O | x | x |
| 989 | Parameter copy alarm release | 59 | D9 | 9 | O | O | O | O | O | O | O | O | O | O | x | O |
| 990 | PU buzzer control | 5A | DA | 9 | O | O | O | O | O | O | O | O | O | O | O | O |
| 991 | PU contrast adjustment | 5B | DB | 9 | O | O | O | O | O | O | O | O | O | O | x | O |
| 992 | Operation panel setting dial push monitor selection | 5C | DC | 9 | O | O | O | O | O | O | O | O | O | O | O | O |
| 994 | Droop break point gain | 5E | DE | 9 | x | O | O | x | x | O | x | x | x | O | O | O |
| 995 | Droop break point torque | 5F | DF | 9 | x | O | O | x | x | O | x | x | x | O | O | O |
| 997 | Fault initiation | 61 | E1 | 9 | O | O | O | O | O | O | O | O | O | x | x | x |
| 998 | PM parameter initialization | 62 | E2 | 9 | O | O | O | O | O | O | O | O | O | O | O | O |

***Tab. A-3:*** *Parameter list with instruction codes (24)*

| Pr. | Name | Instruction code ① | | | Control method ② | | | | | | | | | Parameter | | |
|---|---|---|---|---|---|---|---|---|---|---|---|---|---|---|---|---|
| | | Read | Write | Extended | V/F | Magnetic flux | Vector | | | Sensorless | | PM | | Copy ③ | Clear ③ | All clear ③ |
| | | | | | | | Spped control | Torque control | Position control | Spped control | Torque control | Spped control | Position control | | | |
| 999 | Automatic parameter setting | 63 | E3 | 9 | O | O | O | O | O | O | O | O | O | x | x | O |
| 1002 | Lq tuning target current adjustment coefficient | 02 | 82 | A | x | x | x | x | x | x | x | O | x | O | O | O |
| 1003 | Notch filter frequency | 03 | 83 | A | x | x | O | x | O | O | x | O | O | O | O | O |
| 1004 | Notch filter depth | 04 | 84 | A | x | x | O | x | O | O | x | O | O | O | O | O |
| 1005 | Notch filter width | 05 | 85 | A | x | x | O | x | O | O | x | O | O | O | O | O |
| 1006 | Clock (year) | 06 | 86 | A | O | O | O | O | O | O | O | O | O | x | x | x |
| 1007 | Clock (month, day) | 07 | 87 | A | O | O | O | O | O | O | O | O | O | x | x | x |
| 1008 | Clock (hour, minute) | 08 | 88 | A | O | O | O | O | O | O | O | O | O | x | x | x |
| 1019 | Analog meter voltage negative output selection AY | 13 | 93 | A | O | O | O | O | O | O | O | O | O | O | O | O |
| 1020 | Trace operation selection | 14 | 94 | A | O | O | O | O | O | O | O | O | O | O | O | O |
| 1021 | Trace mode selection | 15 | 95 | A | O | O | O | O | O | O | O | O | O | O | O | O |
| 1022 | Sampling cycle | 16 | 96 | A | O | O | O | O | O | O | O | O | O | O | O | O |
| 1023 | Number of analog channels | 17 | 97 | A | O | O | O | O | O | O | O | O | O | O | O | O |
| 1024 | Sampling auto start | 18 | 98 | A | O | O | O | O | O | O | O | O | O | O | O | O |
| 1025 | Trigger mode selection | 19 | 99 | A | O | O | O | O | O | O | O | O | O | O | O | O |
| 1026 | Number of sampling before trigger | 1A | 9A | A | O | O | O | O | O | O | O | O | O | O | O | O |
| 1027 | Analog source selection (1ch) | 1B | 9B | A | O | O | O | O | O | O | O | O | O | O | O | O |
| 1028 | Analog source selection (2ch) | 1C | 9C | A | O | O | O | O | O | O | O | O | O | O | O | O |
| 1029 | Analog source selection (3ch) | 1D | 9D | A | O | O | O | O | O | O | O | O | O | O | O | O |
| 1030 | Analog source selection (4ch) | 1E | 9E | A | O | O | O | O | O | O | O | O | O | O | O | O |
| 1031 | Analog source selection (5ch) | 1F | 9F | A | O | O | O | O | O | O | O | O | O | O | O | O |
| 1032 | Analog source selection (6ch) | 20 | A0 | A | O | O | O | O | O | O | O | O | O | O | O | O |
| 1033 | Analog source selection (7ch) | 21 | A1 | A | O | O | O | O | O | O | O | O | O | O | O | O |
| 1034 | Analog source selection (8ch) | 22 | A2 | A | O | O | O | O | O | O | O | O | O | O | O | O |
| 1035 | Analog trigger channel | 23 | A3 | A | O | O | O | O | O | O | O | O | O | O | O | O |
| 1036 | Analog trigger operation selection | 24 | A4 | A | O | O | O | O | O | O | O | O | O | O | O | O |
| 1037 | Analog trigger level | 25 | A5 | A | O | O | O | O | O | O | O | O | O | O | O | O |
| 1038 | Digital source selection (1ch) | 26 | A6 | A | O | O | O | O | O | O | O | O | O | O | O | O |
| 1039 | Digital source selection (2ch) | 27 | A7 | A | O | O | O | O | O | O | O | O | O | O | O | O |
| 1040 | Digital source selection (3ch) | 28 | A8 | A | O | O | O | O | O | O | O | O | O | O | O | O |
| 1041 | Digital source selection (4ch) | 29 | A9 | A | O | O | O | O | O | O | O | O | O | O | O | O |

***Tab. A-3:*** *Parameter list with instruction codes (25)*

| Pr. | Name | Instruction code ① | | | Control method ② | | | | | | | | | Parameter | | |
|---|---|---|---|---|---|---|---|---|---|---|---|---|---|---|---|---|
| | | | | | | | Vector | | | Sensorless | | PM | | | | |
| | | Read | Write | Extended | V/F | Magnetic flux | Spped control | Torque control | Position control | Spped control | Torque control | Spped control | Position control | Copy ③ | Clear ③ | All clear ③ |
| 1042 | Digital source selection (5ch) | 2A | AA | A | O | O | O | O | O | O | O | O | O | O | O | O |
| 1043 | Digital source selection (6ch) | 2B | AB | A | O | O | O | O | O | O | O | O | O | O | O | O |
| 1044 | Digital source selection (7ch) | 2C | AC | A | O | O | O | O | O | O | O | O | O | O | O | O |
| 1045 | Digital source selection (8ch) | 2D | AD | A | O | O | O | O | O | O | O | O | O | O | O | O |
| 1046 | Digital trigger channel | 2E | AE | A | O | O | O | O | O | O | O | O | O | O | O | O |
| 1047 | Digital trigger operation selection | 2F | AF | A | O | O | O | O | O | O | O | O | O | O | O | O |
| 1048 | Display-off waiting time | 30 | B0 | A | O | O | O | O | O | O | O | O | O | O | O | O |
| 1049 | USB host reset | 31 | B1 | A | O | O | O | O | O | O | O | O | O | x | x | x |
| 1072 | DC brake judgment time for swinging suppression control operation | 48 | C8 | A | x | x | O | x | x | O | x | O | x | O | O | O |
| 1073 | Swinging suppression control operation selection | 49 | C9 | A | x | x | O | x | x | O | x | O | x | O | O | O |
| 1074 | Swinging suppression frequency | 4A | CA | A | x | x | O | x | x | O | x | O | x | O | O | O |
| 1075 | Swinging suppression depth | 4B | CB | A | x | x | O | x | x | O | x | O | x | O | O | O |
| 1076 | Swinging suppression width | 4C | CC | A | x | x | O | x | x | O | x | O | x | O | O | O |
| 1077 | Rope length | 4D | CD | A | x | x | O | x | x | O | x | O | x | O | O | O |
| 1078 | Trolley weight | 4E | CE | A | x | x | O | x | x | O | x | O | x | O | O | O |
| 1079 | Load weight | 4F | CF | A | x | x | O | x | x | O | x | O | x | O | O | O |
| 1103 | Deceleration time at emergency stop | 03 | 83 | B | O | O | O | O | O | O | O | O | O | O | O | O |
| 1106 | Torque monitor filter | 06 | 86 | B | O | O | O | O | O | O | O | O | O | O | O | O |
| 1107 | Running speed monitor filter | 07 | 87 | B | O | O | O | O | O | O | O | O | O | O | O | O |
| 1108 | Excitation current monitor filter | 08 | 88 | B | O | O | O | O | O | O | O | O | O | O | O | O |
| 1109 | PROFIBUS communication command source selection NP | 09 | 89 | B | x | O | O | O | O | O | O | O | O | O | O | O |
| 1110 | PROFIBUS format selection NP | 0A | 8A | B | O | O | O | O | O | O | O | O | O | O | O | O |
| 1113 | Speed limit method selection | 0D | 8D | B | x | x | x | O | x | x | O | x | x | O | O | O |
| 1114 | Torque command reverse selection | 0E | 8E | B | x | x | x | O | x | x | O | x | x | O | O | O |
| 1115 | Speed control integral term clear time | 0F | 8F | B | x | x | O | x | O | O | x | O | O | O | O | O |
| 1116 | Constant output range speed control P gain compensation | 10 | 90 | B | x | x | O | x | O | O | x | O | O | O | O | O |
| 1117 | Speed control P gain 1 (per-unit system) | 11 | 91 | B | x | x | O | x | O | O | x | O | O | O | O | O |

***Tab. A-3:*** *Parameter list with instruction codes (26)*

| Pr. | Name | Instruction code ① | | | Control method ② | | | | | | | | | Parameter | | |
|---|---|---|---|---|---|---|---|---|---|---|---|---|---|---|---|---|
| | | Read | Write | Extended | V/F | Magnetic flux | Vector | | | Sensorless | | PM | | Copy ③ | Clear ③ | All clear ③ |
| | | | | | | | Spped control | Torque control | Position control | Spped control | Torque control | Spped control | Position control | | | |
| 1118 | Speed control P gain 2 (per-unit system) | 12 | 92 | B | x | x | O | x | O | O | x | O | O | O | O | O |
| 1119 | Model speed control gain (per-unit system) | 13 | 93 | B | x | x | O | x | O | O | x | O | O | O | O | O |
| 1121 | Per-unit speed control reference frequency | 15 | 95 | B | x | x | O | x | O | O | x | O | O | O | O | O |
| 1134 | PID upper limit manipulated value | 22 | A2 | B | O | O | O | x | x | O | x | O | x | O | O | O |
| 1135 | PID lower limit manipulated value | 23 | A3 | B | O | O | O | x | x | O | x | O | x | O | O | O |
| 1136 | Second PID display bias coefficient | 24 | A4 | B | O | O | O | x | x | O | x | O | x | O | x | O |
| 1137 | Second PID display bias analog value | 25 | A5 | B | O | O | O | x | x | O | x | O | x | O | x | O |
| 1138 | Second PID display gain coefficient | 26 | A6 | B | O | O | O | x | x | O | x | O | x | O | x | O |
| 1139 | Second PID display gain analog value | 27 | A7 | B | O | O | O | x | x | O | x | O | x | O | x | O |
| 1140 | Second PID set point/deviation input selection | 28 | A8 | B | O | O | O | x | x | O | x | O | x | O | O | O |
| 1141 | Second PID measured value input selection | 29 | A9 | B | O | O | O | x | x | O | x | O | x | O | O | O |
| 1142 | Second PID unit selection | 2A | AA | B | O | O | O | x | x | O | x | O | x | O | O | O |
| 1143 | Second PID upper limit | 2B | AB | B | O | O | O | x | x | O | x | O | x | O | O | O |
| 1144 | Second PID lower limit | 2C | AC | B | O | O | O | x | x | O | x | O | x | O | O | O |
| 1145 | Second PID deviation limit | 2D | AD | B | O | O | O | x | x | O | x | O | x | O | O | O |
| 1146 | Second PID signal operation selection | 2E | AE | B | O | O | O | x | x | O | x | O | x | O | O | O |
| 1147 | Second output interruption detection time | 2F | AF | B | O | O | O | x | x | O | x | O | x | O | O | O |
| 1148 | Second output interruption detection level | 30 | B0 | B | O | O | O | x | x | O | x | O | x | O | O | O |
| 1149 | Second output interruption cancel level | 31 | B1 | B | O | O | O | x | x | O | x | O | x | O | O | O |
| 1150 | User parameters 1 | 32 | B2 | B | O | O | O | O | O | O | O | x | O | O | O | O |
| 1151 | User parameters 2 | 33 | B3 | B | O | O | O | O | O | O | O | x | O | O | O | O |
| 1152 | User parameters 3 | 34 | B4 | B | O | O | O | O | O | O | O | x | O | O | O | O |
| 1153 | User parameters 4 | 35 | B5 | B | O | O | O | O | O | O | O | x | O | O | O | O |
| 1154 | User parameters 5 | 36 | B6 | B | O | O | O | O | O | O | O | x | O | O | O | O |
| 1155 | User parameters 6 | 37 | B7 | B | O | O | O | O | O | O | O | x | O | O | O | O |

***Tab. A-3:*** *Parameter list with instruction codes (27)*

| Pr. | Name | Instruction code ① | | | Control method ② | | | | | | | | | Parameter | | |
|---|---|---|---|---|---|---|---|---|---|---|---|---|---|---|---|---|
| | | | | | | | Vector | | | Sensorless | | PM | | | | |
| | | Read | Write | Extended | V/F | Magnetic flux | Spped control | Torque control | Position control | Spped control | Torque control | Spped control | Position control | Copy ③ | Clear ③ | All clear ③ |
| 1156 | User parameters 7 | 38 | B8 | B | O | O | O | O | O | O | O | x | O | O | O | O |
| 1157 | User parameters 8 | 39 | B9 | B | O | O | O | O | O | O | O | x | O | O | O | O |
| 1158 | User parameters 9 | 3A | BA | B | O | O | O | O | O | O | O | x | O | O | O | O |
| 1159 | User parameters 10 | 3B | BB | B | O | O | O | O | O | O | O | x | O | O | O | O |
| 1160 | User parameters 11 | 3C | BC | B | O | O | O | O | O | O | O | x | O | O | O | O |
| 1161 | User parameters 12 | 3D | BD | B | O | O | O | O | O | O | O | x | O | O | O | O |
| 1162 | User parameters 13 | 3E | BE | B | O | O | O | O | O | O | O | x | O | O | O | O |
| 1163 | User parameters 14 | 3F | BF | B | O | O | O | O | O | O | O | x | O | O | O | O |
| 1164 | User parameters 15 | 40 | C0 | B | O | O | O | O | O | O | O | x | O | O | O | O |
| 1165 | User parameters 16 | 41 | C1 | B | O | O | O | O | O | O | O | x | O | O | O | O |
| 1166 | User parameters 17 | 42 | C2 | B | O | O | O | O | O | O | O | x | O | O | O | O |
| 1167 | User parameters 18 | 43 | C3 | B | O | O | O | O | O | O | O | x | O | O | O | O |
| 1168 | User parameters 19 | 44 | C4 | B | O | O | O | O | O | O | O | x | O | O | O | O |
| 1169 | User parameters 20 | 45 | C5 | B | O | O | O | O | O | O | O | x | O | O | O | O |
| 1170 | User parameters 21 | 46 | C6 | B | O | O | O | O | O | O | O | x | O | O | O | O |
| 1171 | User parameters 22 | 47 | C7 | B | O | O | O | O | O | O | O | x | O | O | O | O |
| 1172 | User parameters 23 | 48 | C8 | B | O | O | O | O | O | O | O | x | O | O | O | O |
| 1173 | User parameters 24 | 49 | C9 | B | O | O | O | O | O | O | O | x | O | O | O | O |
| 1174 | User parameters 25 | 4A | CA | B | O | O | O | O | O | O | O | x | O | O | O | O |
| 1175 | User parameters 26 | 4B | CB | B | O | O | O | O | O | O | O | x | O | O | O | O |
| 1176 | User parameters 27 | 4C | CC | B | O | O | O | O | O | O | O | x | O | O | O | O |
| 1177 | User parameters 28 | 4D | CD | B | O | O | O | O | O | O | O | x | O | O | O | O |
| 1178 | User parameters 29 | 4E | CE | B | O | O | O | O | O | O | O | x | O | O | O | O |
| 1179 | User parameters 30 | 4F | CF | B | O | O | O | O | O | O | O | x | O | O | O | O |
| 1180 | User parameters 31 | 50 | D0 | B | O | O | O | O | O | O | O | x | O | O | O | O |
| 1181 | User parameters 32 | 51 | D1 | B | O | O | O | O | O | O | O | x | O | O | O | O |

***Tab. A-3:*** *Parameter list with instruction codes (28)*

| Pr. | Name | Instruction code ① | | | Control method ② | | | | | | | | | Parameter | | |
|---|---|---|---|---|---|---|---|---|---|---|---|---|---|---|---|---|
| | | | | | | | Vector | | | Sensorless | | PM | | | | |
| | | Read | Write | Extended | V/F | Magnetic flux | Spped control | Torque control | Position control | Spped control | Torque control | Spped control | Position control | Copy ③ | Clear ③ | All clear ③ |
| 1182 | User parameters 33 | 52 | D2 | B | O | O | O | O | O | O | O | x | O | O | O | O |
| 1183 | User parameters 34 | 53 | D3 | B | O | O | O | O | O | O | O | x | O | O | O | O |
| 1184 | User parameters 35 | 54 | D4 | B | O | O | O | O | O | O | O | x | O | O | O | O |
| 1185 | User parameters 36 | 55 | D5 | B | O | O | O | O | O | O | O | x | O | O | O | O |
| 1186 | User parameters 37 | 56 | D6 | B | O | O | O | O | O | O | O | x | O | O | O | O |
| 1187 | User parameters 38 | 57 | D7 | B | O | O | O | O | O | O | O | x | O | O | O | O |
| 1188 | User parameters 39 | 58 | D8 | B | O | O | O | O | O | O | O | x | O | O | O | O |
| 1189 | User parameters 40 | 59 | D9 | B | O | O | O | O | O | O | O | x | O | O | O | O |
| 1190 | User parameters 41 | 5A | DA | B | O | O | O | O | O | O | O | x | O | O | O | O |
| 1191 | User parameters 42 | 5B | DB | B | O | O | O | O | O | O | O | x | O | O | O | O |
| 1192 | User parameters 43 | 5C | DC | B | O | O | O | O | O | O | O | x | O | O | O | O |
| 1193 | User parameters 44 | 5D | DD | B | O | O | O | O | O | O | O | x | O | O | O | O |
| 1194 | User parameters 45 | 5E | DE | B | O | O | O | O | O | O | O | x | O | O | O | O |
| 1195 | User parameters 46 | 5F | DF | B | O | O | O | O | O | O | O | x | O | O | O | O |
| 1196 | User parameters 47 | 60 | E0 | B | O | O | O | O | O | O | O | x | O | O | O | O |
| 1197 | User parameters 48 | 61 | E1 | B | O | O | O | O | O | O | O | x | O | O | O | O |
| 1198 | User parameters 49 | 62 | E2 | B | O | O | O | O | O | O | O | x | O | O | O | O |
| 1199 | User parameters 50 | 63 | E3 | B | O | O | O | O | O | O | O | x | O | O | O | O |
| 1220 | Target position/speed selection | 14 | 94 | C | x | x | x | x | O | x | x | x | O | O | O | O |
| 1221 | Start command edge detection selection | 15 | 95 | C | x | x | x | x | O | x | x | x | O | O | O | O |
| 1222 | First positioning acceleration time | 16 | 96 | C | x | x | x | x | O | x | x | x | O | O | O | O |
| 1223 | First positioning deceleration time | 17 | 97 | C | x | x | x | x | O | x | x | x | O | O | O | O |
| 1224 | First positioning dwell time | 18 | 98 | C | x | x | x | x | O | x | x | x | O | O | O | O |
| 1225 | First positioning sub-function | 19 | 99 | C | x | x | x | x | O | x | x | x | O | O | O | O |
| 1226 | Second positioning acceleration time | 1A | 9A | C | x | x | x | x | O | x | x | x | O | O | O | O |
| 1227 | Second positioning deceleration time | 1B | 9B | C | x | x | x | x | O | x | x | x | O | O | O | O |

***Tab. A-3:*** *Parameter list with instruction codes (29)*

| Pr. | Name | Instruction code ① | | | Control method ② | | | | | | | | | Parameter | | |
|---|---|---|---|---|---|---|---|---|---|---|---|---|---|---|---|---|
| | | Read | Write | Extended | V/F | Magnetic flux | Vector | | | Sensorless | | PM | | Copy ③ | Clear ③ | All clear ③ |
| | | | | | | | Spped control | Torque control | Position control | Spped control | Torque control | Spped control | Position control | | | |
| 1228 | Second positioning dwell time | 1C | 9C | C | x | x | x | x | O | x | x | x | O | O | O | O |
| 1229 | Second positioning sub-function | 1D | 9D | C | x | x | x | x | O | x | x | x | O | O | O | O |
| 1230 | Third positioning acceleration time | 1E | 9E | C | x | x | x | x | O | x | x | x | O | O | O | O |
| 1231 | Third positioning deceleration time | 1F | 9F | C | x | x | x | x | O | x | x | x | O | O | O | O |
| 1232 | Third positioning dwell time | 20 | A0 | C | x | x | x | x | O | x | x | x | O | O | O | O |
| 1233 | Third positioning sub-function | 21 | A1 | C | x | x | x | x | O | x | x | x | O | O | O | O |
| 1234 | Fourth positioning acceleration time | 22 | A2 | C | x | x | x | x | O | x | x | x | O | O | O | O |
| 1235 | Fourth positioning deceleration time | 23 | A3 | C | x | x | x | x | O | x | x | x | O | O | O | O |
| 1236 | Fourth positioning dwell time | 24 | A4 | C | x | x | x | x | O | x | x | x | O | O | O | O |
| 1237 | Fourth positioning sub-function | 25 | A5 | C | x | x | x | x | O | x | x | x | O | O | O | O |
| 1238 | Fifth positioning acceleration time | 26 | A6 | C | x | x | x | x | O | x | x | x | O | O | O | O |
| 1239 | Fifth positioning deceleration time | 27 | A7 | C | x | x | x | x | O | x | x | x | O | O | O | O |
| 1240 | Fifth positioning dwell time | 28 | A8 | C | x | x | x | x | O | x | x | x | O | O | O | O |
| 1241 | Fifth positioning sub-function | 29 | A9 | C | x | x | x | x | O | x | x | x | O | O | O | O |
| 1242 | Sixth positioning acceleration time | 2A | AA | C | x | x | x | x | O | x | x | x | O | O | O | O |
| 1243 | Sixth positioning deceleration time | 2B | AB | C | x | x | x | x | O | x | x | x | O | O | O | O |
| 1244 | Sixth positioning dwell time | 2C | AC | C | x | x | x | x | O | x | x | x | O | O | O | O |
| 1245 | Sixth positioning sub-function | 2D | AD | C | x | x | x | x | O | x | x | x | O | O | O | O |
| 1246 | Seventh positioning acceleration time | 2E | AE | C | x | x | x | x | O | x | x | x | O | O | O | O |
| 1247 | Seventh positioning deceleration time | 2F | AF | C | x | x | x | x | O | x | x | x | O | O | O | O |
| 1248 | Seventh positioning dwell time | 30 | B0 | C | x | x | x | x | O | x | x | x | O | O | O | O |
| 1249 | Seventh positioning sub-function | 31 | B1 | C | x | x | x | x | O | x | x | x | O | O | O | O |
| 1250 | Eighth positioning acceleration time | 32 | B2 | C | x | x | x | x | O | x | x | x | O | O | O | O |
| 1251 | Eighth positioning deceleration time | 33 | B3 | C | x | x | x | x | O | x | x | x | O | O | O | O |
| 1252 | Eighth positioning dwell time | 34 | B4 | C | x | x | x | x | O | x | x | x | O | O | O | O |
| 1253 | Eighth positioning sub-function | 35 | B5 | C | x | x | x | x | O | x | x | x | O | O | O | O |

***Tab. A-3:*** *Parameter list with instruction codes (30)*

| Pr. | Name | Instruction code ① | | | Control method ② | | | | | | | | | Parameter | | |
|---|---|---|---|---|---|---|---|---|---|---|---|---|---|---|---|---|
| | | Read | Write | Extended | V/F | Magnetic flux | Vector | | | Sensorless | | PM | | Copy ③ | Clear ③ | All clear ③ |
| | | | | | | | Spped control | Torque control | Position control | Spped control | Torque control | Spped control | Position control | | | |
| 1254 | Ninth positioning acceleration time | 36 | B6 | C | x | x | x | x | O | x | x | x | O | O | O | O |
| 1255 | Ninth positioning deceleration time | 37 | B7 | C | x | x | x | x | O | x | x | x | O | O | O | O |
| 1256 | Ninth positioning dwell time | 38 | B8 | C | x | x | x | x | O | x | x | x | O | O | O | O |
| 1257 | Ninth positioning sub-function | 39 | B9 | C | x | x | x | x | O | x | x | x | O | O | O | O |
| 1258 | Tenth positioning acceleration time | 3A | BA | C | x | x | x | x | O | x | x | x | O | O | O | O |
| 1259 | Tenth positioning deceleration time | 3B | BB | C | x | x | x | x | O | x | x | x | O | O | O | O |
| 1260 | Tenth positioning dwell time | 3C | BC | C | x | x | x | x | O | x | x | x | O | O | O | O |
| 1261 | Tenth positioning sub-function | 3D | BD | C | x | x | x | x | O | x | x | x | O | O | O | O |
| 1262 | Eleventh positioning acceleration time | 3E | BE | C | x | x | x | x | O | x | x | x | O | O | O | O |
| 1263 | Eleventh positioning deceleration time | 3F | BF | C | x | x | x | x | O | x | x | x | O | O | O | O |
| 1264 | Eleventh positioning dwell time | 40 | C0 | C | x | x | x | x | O | x | x | x | O | O | O | O |
| 1265 | Eleventh positioning sub-function | 41 | C1 | C | x | x | x | x | O | x | x | x | O | O | O | O |
| 1266 | Twelfth positioning acceleration time | 42 | C2 | C | x | x | x | x | O | x | x | x | O | O | O | O |
| 1267 | Twelfth positioning deceleration time | 43 | C3 | C | x | x | x | x | O | x | x | x | O | O | O | O |
| 1268 | Twelfth positioning dwell time | 44 | C4 | C | x | x | x | x | O | x | x | x | O | O | O | O |
| 1269 | Twelfth positioning sub-function | 45 | C5 | C | x | x | x | x | O | x | x | x | O | O | O | O |
| 1270 | Thirteenth positioning acceleration time | 46 | C6 | C | x | x | x | x | O | x | x | x | O | O | O | O |
| 1271 | Thirteenth positioning deceleration time | 47 | C7 | C | x | x | x | x | O | x | x | x | O | O | O | O |
| 1272 | Thirteenth positioning dwell time | 48 | C8 | C | x | x | x | x | O | x | x | x | O | O | O | O |
| 1273 | Thirteenth positioning sub-function | 49 | C9 | C | x | x | x | x | O | x | x | x | O | O | O | O |
| 1274 | Fourteenth positioning acceleration time | 4A | CA | C | x | x | x | x | O | x | x | x | O | O | O | O |
| 1275 | Fourteenth positioning deceleration time | 4B | CB | C | x | x | x | x | O | x | x | x | O | O | O | O |
| 1276 | Fourteenth positioning dwell time | 4C | CC | C | x | x | x | x | O | x | x | x | O | O | O | O |
| 1277 | Fourteenth positioning sub-function | 4D | CD | C | x | x | x | x | O | x | x | x | O | O | O | O |
| 1278 | Fifteenth positioning acceleration time | 4E | CE | C | x | x | x | x | O | x | x | x | O | O | O | O |
| 1279 | Fifteenth positioning deceleration time | 4F | CF | C | x | x | x | x | O | x | x | x | O | O | O | O |

***Tab. A-3:*** *Parameter list with instruction codes (31)*

| Pr. | Name | Instruction code ① | | | Control method ② | | | | | | | | | Parameter | | |
|---|---|---|---|---|---|---|---|---|---|---|---|---|---|---|---|---|
| | | Read | Write | Extended | V/F | Magnetic flux | Vector | | | Sensorless | | PM | | Copy ③ | Clear ③ | All clear ③ |
| | | | | | | | Spped control | Torque control | Position control | Spped control | Torque control | Spped control | Position control | | | |
| 1280 | Fifteenth positioning dwell time | 50 | D0 | C | x | x | x | x | O | x | x | x | O | O | O | O |
| 1281 | Fifteenth positioning sub-function | 51 | D1 | C | x | x | x | x | O | x | x | x | O | O | O | O |
| 1282 | Home position return method selection | 52 | D2 | C | x | x | x | x | O | x | x | x | O | O | O | O |
| 1283 | Home position return speed | 53 | D3 | C | x | x | x | x | O | x | x | x | O | O | O | O |
| 1284 | Home position return creep speed | 54 | D4 | C | x | x | x | x | O | x | x | x | O | O | O | O |
| 1285 | Home position shift amount lower 4 digits | 55 | D5 | C | x | x | x | x | O | x | x | x | O | O | O | O |
| 1286 | Home position shift amount upper 4 digits | 56 | D6 | C | x | x | x | x | O | x | x | x | O | O | O | O |
| 1287 | Travel distance after proximity dog ON lower 4 digits | 57 | D7 | C | x | x | x | x | O | x | x | x | O | O | O | O |
| 1288 | Travel distance after proximity dog ON upper 4 digits | 58 | D8 | C | x | x | x | x | O | x | x | x | O | O | O | O |
| 1289 | Home position return stopper torque | 59 | D9 | C | x | x | x | x | O | x | x | x | O | O | O | O |
| 1290 | Home position return stopper waiting time | 5A | DA | C | x | x | x | x | O | x | x | x | O | O | O | O |
| 1292 | Position control terminal input selection | 5C | DC | C | x | x | x | x | O | x | x | x | O | O | O | O |
| 1293 | Roll feeding mode selection | 5D | DD | C | x | x | x | x | O | x | x | x | O | O | O | O |
| 1294 | Position detection lower 4 digits | 5E | DE | C | x | x | x | x | O | x | x | x | O | O | O | O |
| 1295 | Position detection upper 4 digits | 5F | DF | C | x | x | x | x | O | x | x | x | O | O | O | O |
| 1296 | Position detection selection | 60 | E0 | C | x | x | x | x | O | x | x | x | O | O | O | O |
| 1297 | Position detection hysteresis width | 61 | E1 | C | x | x | x | x | O | x | x | x | O | O | O | O |

***Tab. A-3:*** *Parameter list with instruction codes (32)*

# A.4 For customers using HMS network options

## A.4.1 List of inverter monitored items

The following items can be set using a communication option.

**16bit data**

| No. | Description | Unit | Type | Read/write |
|---|---|---|---|---|
| H0000 | No data | — | — | — |
| H0001 | Output frequency | 0.01Hz | unsigned | R |
| H0002 | Output current | 0.01A/0.1A | unsigned | R |
| H0003 | Output voltage | 0.1V | unsigned | R |
| H0004 | reserved | — | — | — |
| H0005 | Frequency setting value | 0.01Hz | unsigned | R |
| H0006 | Motor speed | 1r/min | unsigned | R |
| H0007 | Motor torque | 0.1% | unsigned | R |
| H0008 | Converter output voltage | 0.1V | unsigned | R |
| H0009 | Regenerative brake duty | 0.1% | unsigned | R |
| H000A | Electric thermal relay function load factor | 0.1% | unsigned | R |
| H000B | Output current peak value | 0.01A/0.1A | unsigned | R |
| H000C | Converter output voltage peak value | 0.1V | unsigned | R |
| H000D | Input power | 0.01kW/0.1kW | unsigned | R |
| H000E | Output power | 0.01kW/0.1kW | unsigned | R |
| H000F | Input terminal status ① | — | — | R |
| H0010 | Output terminal status ① | — | — | R |
| H0011 | Load meter | 0.1% | unsigned | R |
| H0012 | Motor excitation current | 0.01A/0.1A | unsigned | R |
| H0013 | Position pulse | 1 | unsigned | R/W |
| H0014 | Cumulative energization time | 1h | unsigned | R |
| H0015 | reserved | — | — | — |
| H0016 | Orientation status | 1 | unsigned | R |
| H0017 | Actual operation time | 1h | unsigned | R |
| H0018 | Motor load factor | 0.1% | unsigned | R |
| H0019 | Cumulative power | 1kWh | unsigned | R |
| H001A to H001F | reserved | — | — | — |
| H0020 | Torque order | 0.1% | unsigned | R |
| H0021 | Torque current order | 0.1% | unsigned | R |
| H0022 | Motor output | 0.1kW | unsigned | R |
| H0023 | Feedback pulse | 1 | unsigned | R |
| H0024 to H002D | reserved | — | — | — |
| H002E | Motor temperature | | | R |
| H002F to H0031 | reserved | — | — | — |
| H0032 | Power saving effect | — | unsigned | R |
| H0033 | Cumulative saving power | — | unsigned | R |
| H0034 | PID set point | 0.1% | unsigned | R/W |
| H0035 | PID measured value | 0.1% | unsigned | R/W |
| H0036 | PID deviation | 0.1% | unsigned | R/W |
| H0037 to H0039 | reserved | — | — | — |
| H003A | Option input terminal status1 ① | — | — | R |

***Tab. A-4:*** *Inverter monitored items (16bit data) (1)*

| No. | Description | Unit | Type | Read/write |
|---|---|---|---|---|
| H003B | Option input terminal status2 ① | — | — | R |
| H003C | Option output terminal status ① | — | — | R |
| H003D | Motor thermal load factor | 0.1% | unsigned | R |
| H003E | Transistor thermal load factor | 0.1% | unsigned | R |
| H003F | reserved | — | — | — |
| H0040 | PTC thermistor resistance | ohm | unsigned | R |
| H0041 | Output power (with regenerative display) | | | R |
| H0042 | Cumulative regenerative power | | | R |
| H0043 | reserved | | | |
| H0044 | 2nd PID set point | 0.1% | unsigned | R/W |
| H0045 | 2nd PID measured value | 0.1% | unsigned | R/W |
| H0046 | 2nd PID deviation | 0.1% | unsigned | R/W |
| H0048 to H004F | reserved | — | — | — |
| H0050 | Integrated power on time | | | R |
| H0051 | Running time | | | R |
| H0052 | Saving energy monitor | | | R |
| H0053 | reserved | — | — | — |
| H0054 | Fault code (1) | — | — | R |
| H0055 | Fault code (2) | — | — | R |
| H0056 | Fault code (3) | — | — | R |
| H0057 | Fault code (4) | — | — | R |
| H0058 | Fault code (5) | — | — | R |
| H0059 | Fault code (6) | — | — | R |
| H005A | Fault code (7) | — | — | R |
| H005B | Fault code (8) | — | — | R |
| H00F9 | Run command ② | — | — | R/W |
| H00FA to H01FF | reserved | — | — | — |

***Tab. A-4:*** *Inverter monitored items (16bit data) (2)*

① For details, refer to page 5-317.

② Run command
Users can specify the terminal function using this data. These bits function is depending on inverter parameter setting, refer to page 5-409.

| b15 | | | | | | | | | | | | | | | b0 |
|---|---|---|---|---|---|---|---|---|---|---|---|---|---|---|---|
| — | — | — | — | RES | STP (STOP) | CS | JOG | MRS | RT | RH | RM | RL | — | — | AU |

**32bit data**

| No. | Description | Unit | Type | Read/write |
|---|---|---|---|---|
| H0200 | reserved | — | — | — |
| H0201 | Output frequency (0–15bit) | 0.01Hz | signed | R |
| H0202 | Output frequency (16–31bit) | | | |
| H0203 | Setting frequency (0–15bit) | 0.01Hz | signed | R |
| H0204 | Setting frequency (16–31bit) | | | |
| H0205 | Motor rotation (0–15bit) | 0.1r/min | signed | R |
| H0206 | Motor rotation (16–31bit) | | | |
| H0207 | Load meter (0–15bit) | 0.1% | signed | R |
| H0208 | Load meter (16–31bit) | | | |
| H0209 | Positioning pulse (0–15bit) | 1 | signed | R/W |
| H020A | Positioning pulse (16–31bit) | | | |
| H020B | Watt-hour meter (1kWh step) (0–15bit) | 1kWh | unsigned | R |
| H020C | Watt-hour meter (1kWh step) (16–31bit) | | | |
| H020D | Watt-hour meter (0.1/0.01kWh step) (0–15bit) | 0.1/0.01kWh | unsigned | R |
| H020E | Watt-hour meter(0.1/0.01kWh step) (16–31bit) | | | |
| H020F | Position error (0–15bit) | 1 | signed | R |
| H0210 | Position error (16–31bit) | | | |
| H0211 to H03FF | reserved | — | — | — |

***Tab. A-5:*** *Inverter monitored items (32bit data)*

## A.4.2 Direct command mode for position control

In the direct command mode, the target position and maximum speed can be set through communication.

| Pr. | Name | Initial value | Setting range | Description |
|---|---|---|---|---|
| 1220<br>B100 | Target position/speed selection | 0 | 0 | Target position and maximum speed: Point table |
| | | | 1 | Target position: Direct command<br>Maximum speed: Point table |
| | | | 2 | Target position and maximum speed: Direct command |

- The point table is set as follows in the direct command mode. (The setting is applied when the start signal is turned ON.)

| Pr.1220 setting | Target position | Maximum speed | Acceleration time | Deceleration time | Dwell time | Auxiliary function |
|---|---|---|---|---|---|---|
| 1 | Direct command | Point table 1 | ① | ① | Invalid ② | ① |
| 2 | Direct command | Direct command | Pr.7 | Pr.8 | Invalid ② | ① |

***Tab. A-6:*** *Setting the point table*

① Same as point table 1. However, even when continuous operation is set in the auxiliary function, individual operation is applied.

② The direct command mode is available only for individual operation. The dwell time is invalid.

- To perform positioning operation in the direct command mode, specify the point table (RH recommended) and turn ON the start signal. (When no point table is specified, home position return operation is performed.)

**Example ▽** When Pr. 1220 = "1":

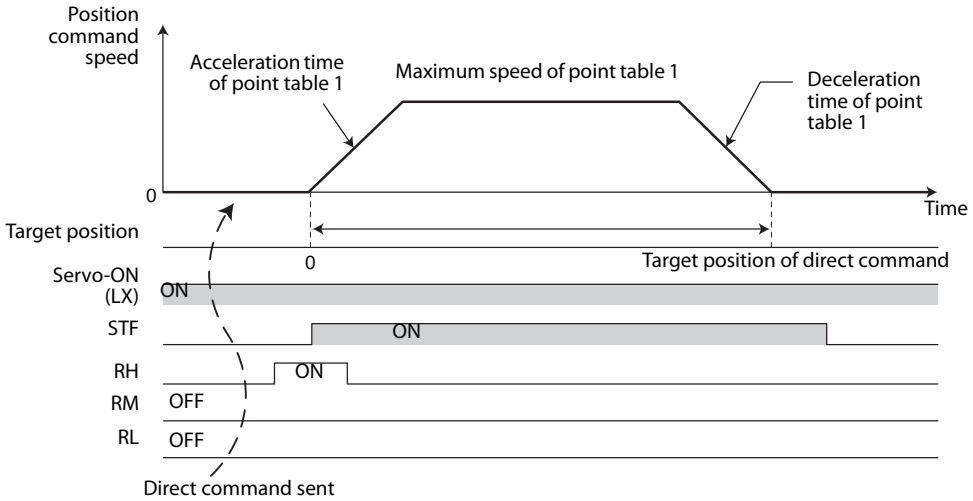


When Pr. 1220 = "2":

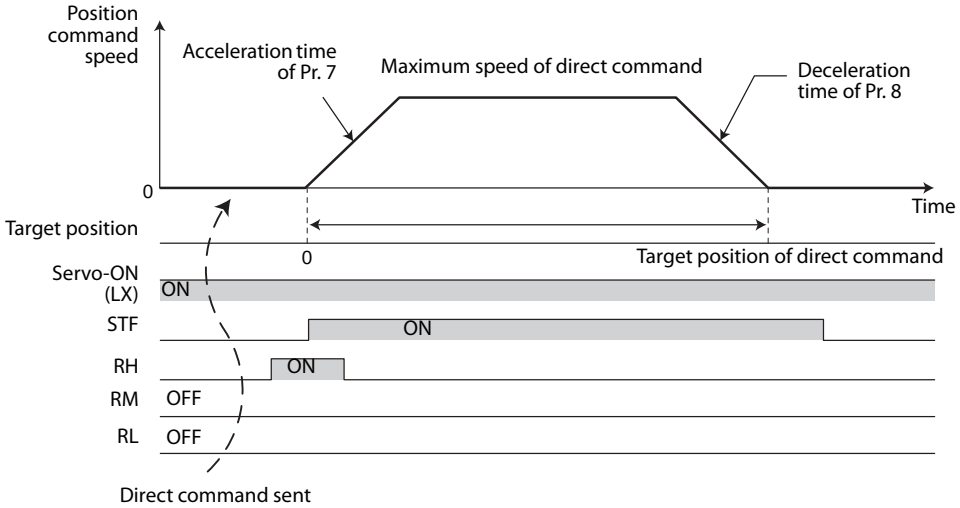


△

# A.5 EC Declarations of Conformity

## A.5.1 Low Voltage Directive

MITSUBISHI ELECTRIC
*Changes for the Better*

EC DECLARATION OF CONFORMITY

We,

Manufacturer: MITSUBISHI ELECTRIC Corporation Nagoya Works

Address (Place of Declare): 1-14 Yada-Minami 5-Chome Higashi-Ku, Nagoya 461-8670 Japan

declare under our sole responsibility that the product

Description: Inverter
Type of Model: FR-A820-0.4K to 90K-**, FR-A820-00046 to 04750-**
Notice: **:The type name may be followed by any alphanumeric suffix.

to which this declaration relates is in conformity with the following standards and directive.

| Directive | | Harmonized Standard |
|---|---|---|
| Low Voltage Directive | 2006/95/EC | EN61800-5-1:2007 |

The Last Two digit of the year in which the CE marking was affixed for Low Voltage Directive is 13.

Issue Date (Date of Declaration): April/15/2013

The identity and signature of the person empowered to bind the manufacturer or his authorized representative.

(Signature)

[Shigemi Kuriyama]
Senior Manager, Inverter System Dept.
MITSUBISHI ELECTRIC Corporation Nagoya Works

Authorized representative in Europe
(The person authorized compiles the relevant Technical documentation)

(Signature)

[Hartmut Putz]
Gother Str. 8, 40880 Ratingen/ P.O. Box 1548,
40835 Ratingen, Germany
Executive Vice President Marketing Devision
MITSUBISHI ELECTRIC EUROPE B.V Germany

BCN-A21160-049 A

Page 1 of 1

MITSUBISHI ELECTRIC
*Changes for the Better*

# EC DECLARATION OF CONFORMITY

We,

Manufacturer: MITSUBISHI ELECTRIC Corporation Nagoya Works

Address (Place of Declare): 1-14 Yada-Minami 5-Chome Higashi-Ku, Nagoya 461-8670 Japan

declare under our sole responsibility that the product

Description: Inverter
Type of Model: FR-A840-0.4K to 280K-**, FR-A840-00023 to 06830-**
Notice: **:The type name may be followed by any alphanumeric suffix.

to which this declaration relates is in conformity with the following standards and directive.

| Directive | | Harmonized Standard |
|---|---|---|
| Low Voltage Directive | 2006/95/EC | EN61800-5-1:2007 |

The Last Two digit of the year in which the CE marking was affixed for Low Voltage Directive is 13.

Issue Date (Date of Declaration): November/21/2013

The identity and signature of the person empowered to bind the manufacturer or his authorized representative.

(Signature)

[Shigemi Kuriyama]
Senior Manager, Inverter System Dept.
MITSUBISHI ELECTRIC Corporation Nagoya Works

Authorized representative in Europe
(The person authorized compiles the relevant Technical documentation)

(Signature)

[Hartmut Putz]
Gother Str. 8, 40880 Ratingen/ P.O. Box 1548,
40835 Ratingen, Germany
Executive Vice President Marketing Devision
MITSUBISHI ELECTRIC EUROPE B.V Germany

BCN-A21160-051 B

Page 1 of 1

MITSUBISHI ELECTRIC
*Changes for the Better*

# EC DECLARATION OF CONFORMITY

We,

Manufacturer: MITSUBISHI ELECTRIC Corporation Nagoya Works

Address (Place of Declare): 1-14 Yada-Minami 5-Chome Higashi-Ku, Nagoya 461-8670 Japan

declare under our sole responsibility that the product

Description: Inverter
Type of Model: FR-A846-7.5K to 18.5K-**, FR-A846-00250 to 00470-**
Notice: **:The type name may be followed by any alphanumeric suffix.

to which this declaration relates is in conformity with the following standards and directive.

| Directive | | Harmonized Standard |
|---|---|---|
| Low Voltage Directive | 2006/95/EC | EN61800-5-1:2007 |

The Last Two digit of the year in which the CE marking was affixed for Low Voltage Directive is 13.

Issue Date (Date of Declaration): November/21/2013

The identity and signature of the person empowered to bind the manufacturer or his authorized representative.

(Signature)

[Shigemi Kuriyama]
Senior Manager, Inverter System Dept.
MITSUBISHI ELECTRIC Corporation Nagoya Works

Authorized representative in Europe
(The person authorized compiles the relevant Technical documentation)

(Signature)

[Hartmut Putz]
Gother Str. 8, 40880 Ratingen/ P.O. Box 1548,
40835 Ratingen, Germany
Executive Vice President Marketing Devision
MITSUBISHI ELECTRIC EUROPE B.V Germany

BCN-A21160-060

Page 1 of 1

MITSUBISHI ELECTRIC
*Changes for the Better*

# EC DECLARATION OF CONFORMITY

We,

Manufacturer: MITSUBISHI ELECTRIC Corporation Nagoya Works

Address (Place of Declare): 1-14 Yada-Minami 5-Chome Higashi-Ku, Nagoya 461-8670 Japan

declare under our sole responsibility that the product

Description: Inverter

Type of Model: FR-A820-0.4K to 90K-** / FR-A8NP,
FR-A820-00046 to 04750-** / FR-A8NP,
FR-A840-0.4K to 280K-** / FR-A8NP,
FR-A840-00023 to 06830-** / FR-A8NP,
FR-A846-7.5K to 18.5K-** / FR-A8NP,
FR-A846-00250 to 00470-** / FR-A8NP,

Notice: **:The type name may be followed by any alphanumeric suffix.

to which this declaration relates is in conformity with the following standards and directive.

| Directive | Harmonized Standard |
|---|---|
| Low Voltage Directive 2006/95/EC | EN61800-5-1:2007 |

The Last Two digit of the year in which the CE marking was affixed for Low Voltage Directive is 13.

Issue Date (Date of Declaration): December/11/2013

The identity and signature of the person empowered to bind the manufacturer or his authorized representative.

(Signature)

[Shigemi Kuriyama]
Senior Manager, Inverter System Dept.
MITSUBISHI ELECTRIC Corporation Nagoya Works

Authorized representative in Europe
(The person authorized compiles the relevant Technical documentation)

(Signature)

[Hartmut Putz]
Gother Str. 8, 40880 Ratingen/ P.O. Box 1548,
40835 Ratingen, Germany
Executive Vice President Marketing Devision
MITSUBISHI ELECTRIC EUROPE B.V Germany

BCN-A21160-062

Page 1 of 1

MITSUBISHI ELECTRIC
*Changes for the Better*

# EC DECLARATION OF CONFORMITY

We,

Manufacturer: MITSUBISHI ELECTRIC Corporation Nagoya Works

Address (Place of Declare): 1-14 Yada-Minami 5-Chome Higashi-Ku, Nagoya 461-8670 Japan

declare under our sole responsibility that the product

Description: Inverter

Type of Model: FR-CC2-H315K to 500K-** / FR-A842-315K to 500K-**,
FR-CC2-H315K to 500K-** / FR-A842-07700 to 12120-**

Notice: **:The type name may be followed by any alphanumeric suffix.

to which this declaration relates is in conformity with the following standards and directive.

| Directive | | Harmonized Standard |
|---|---|---|
| Low Voltage Directive | 2006/95/EC | EN61800-5-1:2007 |

The Last Two digit of the year in which the CE marking was affixed for Low Voltage Directive is 13.

Issue Date (Date of Declaration): January/20/2014

The identity and signature of the person empowered to bind the manufacturer or his authorized representative.

(Signature)

[Shigemi Kuriyama]
Senior Manager, Inverter System Dept.
MITSUBISHI ELECTRIC Corporation Nagoya Works

Authorized representative in Europe
(The person authorized compiles the relevant Technical documentation)

(Signature)

[Hartmut Putz]
Gother Str. 8, 40880 Ratingen/ P.O. Box 1548,
40835 Ratingen, Germany
Executive Vice President Marketing Devision
MITSUBISHI ELECTRIC EUROPE B.V Germany

BCN-A21160-064

Page 1 of 1

## A.5.2 EMC Directive

MITSUBISHI ELECTRIC
*Changes for the Better*

### EC DECLARATION OF CONFORMITY

We,

Manufacturer: MITSUBISHI ELECTRIC Corporation Nagoya Works

Address (Place of Declare): 1-14 Yada-Minami 5-Chome Higashi-Ku, Nagoya 461-8670 Japan

declare under our sole responsibility that the product

Description: Inverter
Type of Model: FR-A820-0.4K to 90K-**, FR-A820-00046 to 04750-**
Notice: **:The type name may be followed by any alphanumeric suffix.

to which this declaration relates is in conformity with the following standards and directive.

| Directive | | Harmonized Standard |
|---|---|---|
| EMC Directive | 2004/108/EC | EN61800-3:2004+A1:2012 |

Issue Date (Date of Declaration): April/15/2013

The identity and signature of the person empowered to bind the manufacturer or his authorized representative.

(Signature)

[Shigemi Kuriyama]
Senior Manager, Inverter System Dept.
MITSUBISHI ELECTRIC Corporation Nagoya Works

Authorized representative in Europe
(The person authorized compiles the relevant Technical documentation)

(Signature)

[Hartmut Putz]
Gother Str. 8, 40880 Ratingen/ P.O. Box 1548,
40835 Ratingen, Germany
Executive Vice President Marketing Devision
MITSUBISHI ELECTRIC EUROPE B.V Germany

BCN-A21160-050 A

Page 1 of 1

MITSUBISHI ELECTRIC
*Changes for the Better*

# EC DECLARATION OF CONFORMITY

We,

Manufacturer: MITSUBISHI ELECTRIC Corporation Nagoya Works

Address (Place of Declare): 1-14 Yada-Minami 5-Chome Higashi-Ku, Nagoya 461-8670 Japan

declare under our sole responsibility that the product

Description: Inverter
Type of Model: FR-A840-0.4K to 280K-**, FR-A840-00023 to 06830-**
Notice: **:The type name may be followed by any alphanumeric suffix.

to which this declaration relates is in conformity with the following standards and directive.

| Directive | | Harmonized Standard |
|---|---|---|
| EMC Directive | 2004/108/EC | EN61800-3:2004+A1:2012 |

Issue Date (Date of Declaration): November/21/2013

The identity and signature of the person empowered to bind the manufacturer or his authorized representative.

S. Kuriyama
(Signature)

[Shigemi Kuriyama]
Senior Manager, Inverter System Dept.
MITSUBISHI ELECTRIC Corporation Nagoya Works

Authorized representative in Europe
(The person authorized compiles the relevant Technical documentation)

(Signature)

[Hartmut Putz]
Gother Str. 8, 40880 Ratingen/ P.O. Box 1548,
40835 Ratingen, Germany
Executive Vice President Marketing Devision
MITSUBISHI ELECTRIC EUROPE B.V Germany

BCN-A21160-052 B

Page 1 of 1

MITSUBISHI ELECTRIC
*Changes for the Better*

# EC DECLARATION OF CONFORMITY

We,

Manufacturer: MITSUBISHI ELECTRIC Corporation Nagoya Works

Address (Place of Declare): 1-14 Yada-Minami 5-Chome Higashi-Ku, Nagoya 461-8670 Japan

declare under our sole responsibility that the product

Description: Inverter
Type of Model: FR-A846-7.5K to 18.5K-**, FR-A846-00250 to 00470-**
Notice: **:The type name may be followed by any alphanumeric suffix.

to which this declaration relates is in conformity with the following standards and directive.

| Directive | | Harmonized Standard |
|---|---|---|
| EMC Directive | 2004/108/EC | EN61800-3:2004+A1:2012 |

Issue Date (Date of Declaration): November/21/2013

The identity and signature of the person empowered to bind the manufacturer or his authorized representative.

(Signature)

[Shigemi Kuriyama]
Senior Manager, Inverter System Dept.
MITSUBISHI ELECTRIC Corporation Nagoya Works

Authorized representative in Europe
(The person authorized compiles the relevant Technical documentation)

(Signature)

[Hartmut Putz]
Gother Str. 8, 40880 Ratingen/ P.O. Box 1548,
40835 Ratingen, Germany
Executive Vice President Marketing Devision
MITSUBISHI ELECTRIC EUROPE B.V Germany

BCN-A21160-061

Page 1 of 1

MITSUBISHI ELECTRIC
*Changes for the Better*

# EC DECLARATION OF CONFORMITY

We,

Manufacturer: MITSUBISHI ELECTRIC Corporation Nagoya Works

Address (Place of Declare): 1-14 Yada-Minami 5-Chome Higashi-Ku, Nagoya 461-8670 Japan

declare under our sole responsibility that the product

Description: Inverter

Type of Model: FR-A820-0.4K to 90K-** / FR-A8NP,
FR-A820-00046 to 04750-** / FR-A8NP,
FR-A840-0.4K to 280K-** / FR-A8NP,
FR-A840-00023 to 06830-** / FR-A8NP,
FR-A846-7.5K to 18.5K-** / FR-A8NP,
FR-A846-00250 to 00470-** / FR-A8NP,

Notice: **:The type name may be followed by any alphanumeric suffix.

to which this declaration relates is in conformity with the following standards and directive.

| Directive | | Harmonized Standard |
|---|---|---|
| EMC Directive | 2004/108/EC | EN61800-3:2004+A1:2012 |

Issue Date (Date of Declaration): December/11/2013

The identity and signature of the person empowered to bind the manufacturer or his authorized representative.

(Signature)

[Shigemi Kuriyama]
Senior Manager, Inverter System Dept.
MITSUBISHI ELECTRIC Corporation Nagoya Works

Authorized representative in Europe
(The person authorized compiles the relevant Technical documentation)

(Signature)

[Hartmut Putz]
Gother Str. 8, 40880 Ratingen/ P.O. Box 1548,
40835 Ratingen, Germany
Executive Vice President Marketing Devision
MITSUBISHI ELECTRIC EUROPE B.V Germany

BCN-A21160-063

Page 1 of 1

MITSUBISHI ELECTRIC
*Changes for the Better*

# EC DECLARATION OF CONFORMITY

We,

Manufacturer: MITSUBISHI ELECTRIC Corporation Nagoya Works

Address (Place of Declare): 1-14 Yada-Minami 5-Chome Higashi-Ku, Nagoya 461-8670 Japan

declare under our sole responsibility that the product

Description: Inverter
Type of Model: FR-CC2-H315K to 500K-** / FR-A842-315K to 500K-**,
FR-CC2-H315K to 500K-** / FR-A842-07700 to 12120-**
Notice: **:The type name may be followed by any alphanumeric suffix.

to which this declaration relates is in conformity with the following standards and directive.

| Directive | | Harmonized Standard |
|---|---|---|
| EMC Directive | 2004/108/EC | EN61800-3:2004+A1:2012 |

Issue Date (Date of Declaration): January/20/2014

The identity and signature of the person empowered to bind the manufacturer or his authorized representative.

(Signature)

[Shigemi Kuriyama]
Senior Manager, Inverter System Dept.
MITSUBISHI ELECTRIC Corporation Nagoya Works

Authorized representative in Europe
(The person authorized compiles the relevant Technical documentation)

(Signature)

[Hartmut Putz]
Gother Str. 8, 40880 Ratingen/ P.O. Box 1548,
40835 Ratingen, Germany
Executive Vice President Marketing Devision
MITSUBISHI ELECTRIC EUROPE B.V Germany

BCN-A21160-065

Page 1 of 1

## HEADQUARTERS

Mitsubishi Electric Europe B.V. **EUROPE**
Gothaer Straße 8
**D-40880 Ratingen**
Phone: +49 (0)2102 / 486-0
Fax: +49 (0)2102 / 486-1120

Mitsubishi Electric Europe B.V. **CZECH REP.**
Radlická 751/113e Avenir Business Park
**CZ-158 00 Praha 5**
Phone: +420 251 551 470
Fax: +420 251 551 471

Mitsubishi Electric Europe B.V. **FRANCE**
25, Boulevard des Bouvets
**F-92741 Nanterre Cedex**
Phone: +33 (0)1 / 55 68 55 68
Fax: +33 (0)1 / 55 68 57 57

Mitsubishi Electric Europe B.V. **IRELAND**
Westgate Business Park, Ballymount
**IRL-Dublin 24**
Phone: +353 (0)1 4198800
Fax: +353 (0)1 4198890

Mitsubishi Electric Europe B.V. **ITALY**
Viale Colleoni 7 Palazzo Sirio
**I-20864 Agrate Brianza (MB)**
Phone: +39 039 / 60 53 1
Fax: +39 039 / 60 53 312

Mitsubishi Electric Europe B.V. **NETHERLANDS**
Nijverheidsweg 23a
**NL-3641RP Mijdrecht**
Phone: +31 (0) 297250350

Mitsubishi Electric Europe B.V. **POLAND**
ul. Krakowska 50
**PL-32-083 Balice**
Phone: +48 (0) 12 347 65 00
Fax: +48 (0) 12 347 65 01

Mitsubishi Electric Europe B.V. **RUSSIA**
52, bld. 1 Kosmodamianskaya emb.
**RU-115054 Moscow**
Phone: +7 495 / 721 2070
Fax: +7 495 / 721 2071

Mitsubishi Electric Europe B.V. **SPAIN**
Carretera de Rubí 76-80 Apdo. 420
**E-08190 Sant Cugat del Vallés (Barcelona)**
Phone: +34 (0) 93 / 5653131
Fax: +34 (0) 93 / 5891579

Mitsubishi Electric Europe B.V. (Scandinavia) **SWEDEN**
Fjelievägen 8
**SE-22736 Lund**
Phone: +46 (0) 8 625 10 00
Fax: +46 (0) 46 39 70 18

Mitsubishi Electric Turkey Elektrik Ürünleri A.Ş. **TURKEY**
Fabrika Otomasyonu Merkezi
Şerifali Mahallesi Nutuk Sokak No.5
**TR-34775 Ümraniye-İSTANBUL**
Phone: +90 (0)216 / 526 39 90
Fax: +90 (0)216 / 526 39 95

Mitsubishi Electric Europe B.V. **UK**
Travellers Lane
**UK-Hatfield, Herts. AL10 8XB**
Phone: +44 (0)1707 / 28 87 80
Fax: +44 (0)1707 / 27 86 95

Mitsubishi Electric Europe B.V. **UAE**
Dubai Silicon Oasis
**United Arab Emirates - Dubai**
Phone: +971 4 3724716
Fax: +971 4 3724721

Mitsubishi Electric Corporation **JAPAN**
Tokyo Building 2-7-3
Marunouchi, Chiyoda-ku
**Tokyo 100-8310**
Phone: +81 (3) 3218-2111
Fax: +81 (3) 3218-2185

Mitsubishi Electric Automation, Inc. **USA**
500 Corporate Woods Parkway
**Vernon Hills, IL 60061**
Phone: +1 (847) 478-2100
Fax: +1 (847) 478-0328

## EUROPEAN REPRESENTATIVES

GEVA **AUSTRIA**
Wiener Straße 89
**A-2500 Baden**
Phone: +43 (0)2252 / 85 55 20
Fax: +43 (0)2252 / 488 60

OOO TECHNIKON **BELARUS**
Prospect Nezavisimosti 177-9
**BY-220125 Minsk**
Phone: +375 (0)17 / 393 1177
Fax: +375 (0)17 / 393 0081

ESCO DRIVES **BELGIUM**
Culliganlaan 3
**BE-1831 Diegem**
Phone: +32 (0)2 / 717 64 60
Fax: +32 (0)2 / 717 64 61

KONING & HARTMAN B.V. **BELGIUM**
Woluwelaan 31
**BE-1800 Vilvoorde**
Phone: +32 (0)2 / 257 02 40
Fax: +32 (0)2 / 257 02 49

INEA RBT d.o.o. **BOSNIA AND HERZEGOVINA**
Stegne 11
**SI-1000 Ljubljana**
Phone: +386 (0)1/ 513 8116
Fax: +386 (0)1/ 513 8170

AKHNATON **BULGARIA**
4, Andrei Ljapchev Blvd., PO Box 21
**BG-1756 Sofia**
Phone: +359 (0)2 / 817 6000
Fax: +359 (0)2 / 97 44 06 1

INEA CR **CROATIA**
Losinjska 4 a
**HR-10000 Zagreb**
Phone: +385 (0)1 / 36 940 - 01/ -02/ -03
Fax: +385 (0)1 / 36 940 - 03

AutoCont C. S. S.R.O. **CZECH REPUBLIC**
Kafkova 1853/3
**CZ-702 00 Ostrava 2**
Phone: +420 595 691 150
Fax: +420 595 691 199

Beijer Electronics A/S **DENMARK**
Lykkegardsvej 17
**DK-4000 Roskilde**
Phone: +45 (0)46/ 75 76 66
Fax: +45 (0)46 / 75 56 26

HANS FØLSGAARD A/S **DENMARK**
Theilgaards Torv 1
**DK-4600 Køge**
Phone: +45 4320 8600
Fax: +45 4396 8855

Beijer Electronics Eesti OÜ **ESTONIA**
Pärnu mnt.160i
**EE-11317 Tallinn**
Phone: +372 (0)6 / 51 81 40
Fax: +372 (0)6 / 51 81 49

Beijer Electronics OY **FINLAND**
Vanha Nurmijärventie 62
**FIN-01670 Vantaa**
Phone: +358 (0)207 / 463 500
Fax: +358 (0)207 / 463 501

PROVENDOR OY **FINLAND**
Teljänkatu 8 A3
**FIN-28130 Pori**
Phone: +358 (0) 2 / 522 3300
Fax: +358 (0) 2 / 522 3322

UTECO A.B.E.E. **GREECE**
5, Mavrogenous Str.
**GR-18542 Piraeus**
Phone: +30 (0)211 / 1206-900
Fax: +30 (0)211 / 1206-999

MELTRADE Kft. **HUNGARY**
Fertő utca 14.
**HU-1107 Budapest**
Phone: +36 (0)1 / 431-9726
Fax: +36 (0)1 / 431-9727

Beijer Electronics SIA **LATVIA**
Ritausmas iela 23
**LV-1058 Riga**
Phone: +371 (0)6 / 784 2280
Fax: +371 (0)6 / 784 2281

## EUROPEAN REPRESENTATIVES

Beijer Electronics UAB **LITHUANIA**
Goštautų g. 3
**LT-48324 Kaunas**
Phone: +370 37 262707
Fax: +370 37 455605

ALFATRADE Ltd. **MALTA**
99, Paola Hill
**Malta-Paola PLA 1702**
Phone: +356 (0)21 / 697 816
Fax: +356 (0)21 / 697 817

INTEHSIS SRL **MOLDOVA**
bld. Traian 23/1
**MD-2060 Kishinev**
Phone: +373 (0)22 / 66 4242
Fax: +373 (0)22 / 66 4280

HIFLEX AUTOM. B.V. **NETHERLANDS**
Wolweverstraat 22
**NL-2984 CD Ridderkerk**
Phone: +31 (0)180 / 46 60 04
Fax: +31 (0)180 / 44 23 55

IMTECH MARINE & OFFSHORE B.V. **NETHERLANDS**
Sluisjesdijk 155
**NL-3087 AG Rotterdam**
Phone: +31 (0)10 / 487 19 11
Fax: +31 (0)10 / 487 1692

KONING & HARTMAN B.V. **NETHERLANDS**
Energieweg 1
**NL-2627 AP Delft**
Phone: +31 (0)15 260 99 06
Fax: +31 (0)15 261 9194

Beijer Electronics AS **NORWAY**
Postboks 487
**NO-3002 Drammen**
Phone: +47 (0)32 / 24 30 00
Fax: +47 (0)32 / 84 85 77

Fonseca S.A. **PORTUGAL**
R. João Francisco do Casal 87/89
**PT-3801-997 Aveiro, Esgueira**
Phone: +351 (0)234 / 303 900
Fax: +351 (0)234 / 303 910

SIRIUS TRADING & SERVICES SRL **ROMANIA**
Aleea Lacul Morii Nr. 3
**RO-060841 Bucuresti, Sector 6**
Phone: +40 (0)21 / 430 40 06
Fax: +40 (0)21 / 430 40 02

INEA SR d.o.o. **SERBIA**
Ul. Karadjordjeva 12/217
**SER-11300 Smederevo**
Phone: +386 (026) 461 54 01

SIMAP SK (Západné Slovensko) **SLOVAKIA**
Jána Derku 1671
**SK-911 01 Trenčín**
Phone: +421 (0)32 743 04 72
Fax: +421 (0)32 743 75 20

INEA RBT d.o.o. **SLOVENIA**
Stegne 11
**SI-1000 Ljubljana**
Phone: +386 (0)1 / 513 8116
Fax: +386 (0)1 / 513 8170

Beijer Electronics Automation AB **SWEDEN**
Box 426
**SE-20124 Malmö**
Phone: +46 (0)40 / 35 86 00
Fax: +46 (0)40 / 93 23 01

OMNI RAY AG **SWITZERLAND**
Im Schörli 5
**CH-8600 Dübendorf**
Phone: +41 (0)44 / 802 28 80
Fax: +41 (0)44 / 802 28 28

OOO "CSC-AUTOMATION" **UKRAINE**
4-B, M. Raskovoyi St.
**UA-02660 Kiev**
Phone: +380 (0)44 / 494 33 44
Fax: +380 (0)44 / 494-33-66

## EURASIAN REPRESENTATIVES

TOO Kazpromavtomatika **KAZAKHSTAN**
UL. ZHAMBYLA 28,
**KAZ-100017 Karaganda**
Phone: +7 7212 / 50 10 00
Fax: +7 7212 / 50 11 50

## MIDDLE EAST REPRESENTATIVE

I.C. SYSTEMS Ltd. **EGYPT**
23 Al-Saad-Al-Alee St.
**EG-Sarayat, Maadi, Cairo**
Phone: +20 (0) 2 / 235 98 548
Fax: +20 (0) 2 / 235 96 625

SHERF Motion Techn. Ltd. **ISRAEL**
Rehov Hamerkava 19
**IL-58851 Holon**
Phone: +972 (0)3 / 559 54 62
Fax: +972 (0)3 / 556 01 82

CEG LIBAN **LEBANON**
Cebaco Center/Block A Autostrade DORA
**Lebanon-Beirut**
Phone: +961 (0)1 / 240 445
Fax: +961 (0)1 / 240 193

## AFRICAN REPRESENTATIVE

ADROIT TECHNOLOGIES **SOUTH AFRICA**
20 Waterford Office Park 189 Witkoppen Road
**ZA-Fourways**
Phone: + 27 (0)11 / 658 8100
Fax: + 27 (0)11 / 658 8101